FACTORY SETUP SHEET A215

Arn0

DATE / /

DRIVER

TRACK

TRACK CONDITIONS

◯ Indoor	◯ Tight	◯ Smooth	◯ Hard Packed	◯ Blue Groove	
◯ Wet	◯ Low Bite	◯ High Bite	◯ Outdoor	◯ Open	◯ Rough	◯ Loose/Loamy
◯ Dry	◯ Dusty	◯ Wed Bite	◯ Other		

Motor | **ESC** | **Battery**

Pinion ◯ 16T ◯ 17T ◯ 18T ◯ Other ____ T

DIFF

Front	Center	Rear
Oil #	Oil #	Oil #
T × T	Spur gear T	T × T

FRONT SUSPENSION

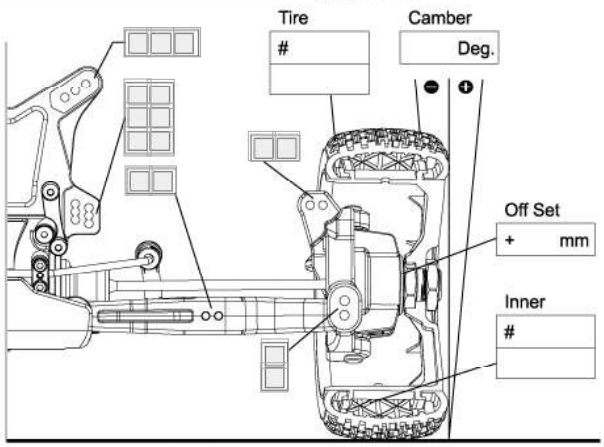

FRONT TOE ANGLE / CASTER ANGLE

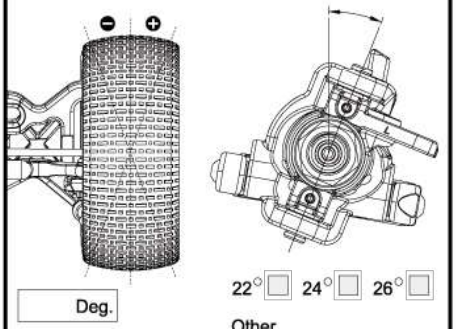

FRONT SHOCK

Oil
#

PISTON
#0096-0615 6x1.5mm
#0096-0812 8x1.2mm
#0096-0813 8x1.3mm
others

CONE OF PISTON
DOWN
UP

SHOCK SPRINGS
#9680 Black -Red dot
#9685 Black-Orange dot
#9690 Black-Yellow dot
others

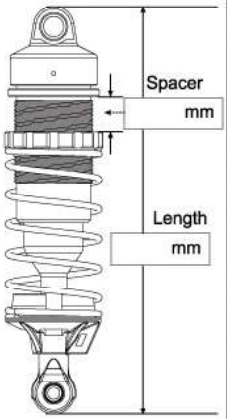

KICK UP



ANTI ROLL BAR FRONT

#8019 U Type 1.9mm
#8021 U Type 2.1mm
#8022 U Type 2.2mm
#8023 U Type 2.3mm
#8024 U Type 2.4mm
#8025 U Type 2.5mm
others



ANTI SQUAT / TOE ANGLE

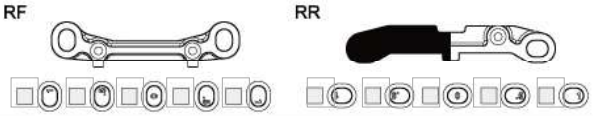

WHEEL BASE

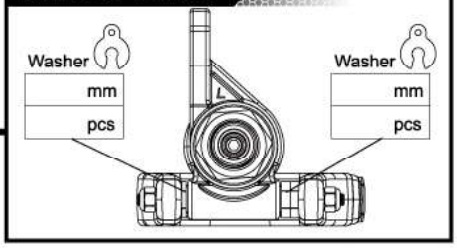

REAR SHOOCK

Oil
#

PISTON
#0096-0615 6x1.5mm
#0096-0812 8x1.2mm
#0096-0813 8x1.3mm
others

CONE OF PISTON
DOWN
UP

SHOCK SPRINGS
#9785 Black -Red dot
#9790 Black-Orange dot
#9795 Black-Yellow dot
others

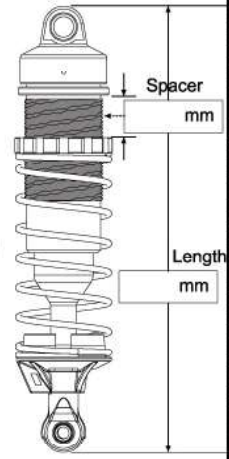

REAR SUSPENSION

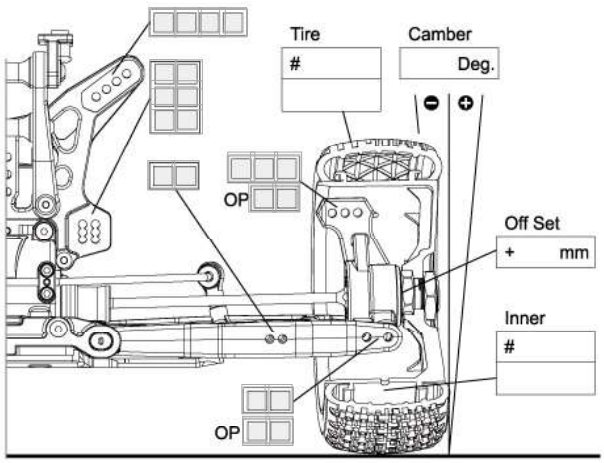

WING POSITION

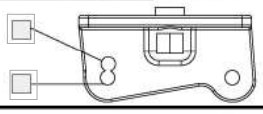

ANTI ROLL BAR REAR

#8322 U Type 2.2mm
#8323 U Type 2.3mm
#8324 U Type 2.4mm
#8325 U Type 2.5mm
#8326 W Type 2.6mm
#8328 W Type 2.8mm
#8330 W Type 3.0mm
others

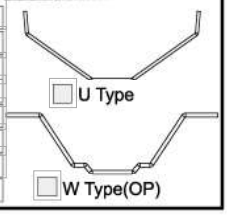

DROOP LIMITER

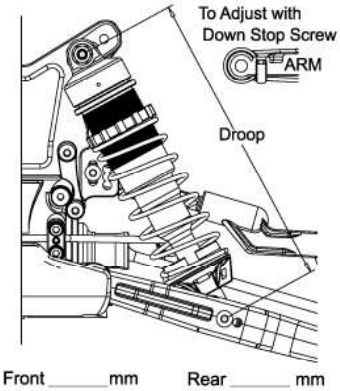

ACKERMAN



RIDE HEIGHT

WING ____

