Bodyshell:_____ **Thickness:**_____ **Track Conditions**

Driver:_____ **Date:**_____ **Composition:** ☐ Asphalt ☐ Carpet

Event:_____ **Track:**_____ **Layout:** ☐ Open ☐ Mixed ☐ Technical

Car:_____ **Motor:**_____ **Traction:** ☐ Low ☐ Medium ☐ High

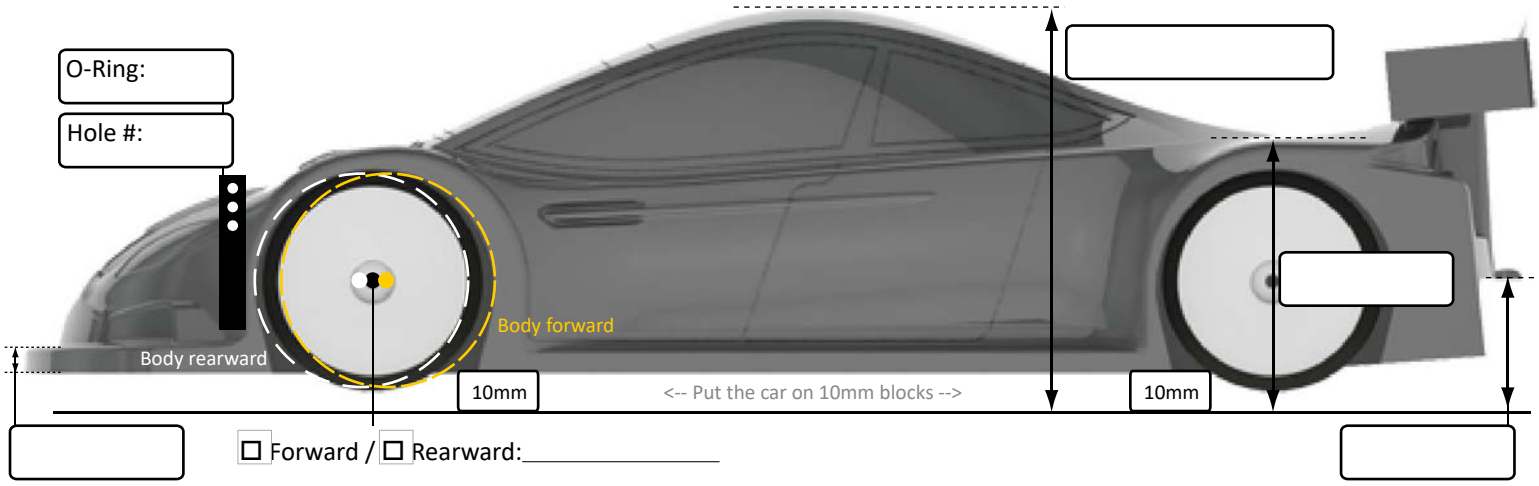

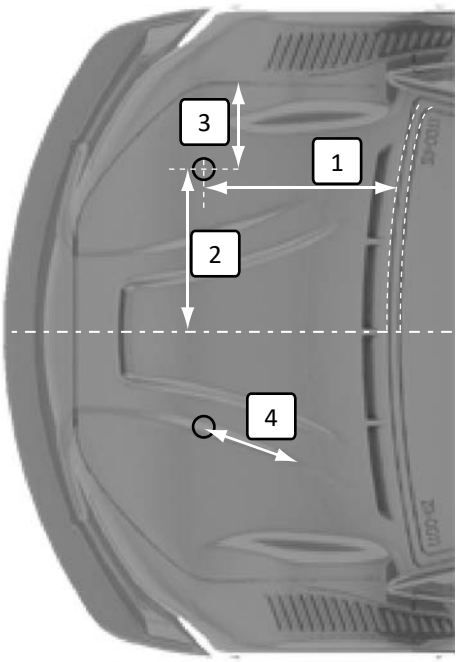

Front

☐ From base of windshield (1):_____

☐ From centerline (2):_____

Center-to-Center:_____

☐ From hood molding line (3):_____

☐ From back of molding line (4):_____

Rear

☐ From back of wing mount (5):_____

☐ From centerline (6):_____

☐ From trunk line inwards (7):_____

☐ From "mounting help" line outwards:_____

☐ Horizontal Body Mount

Body Weight (Track ready):_____

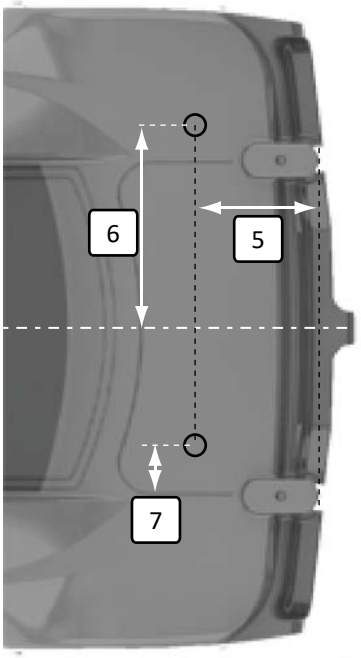

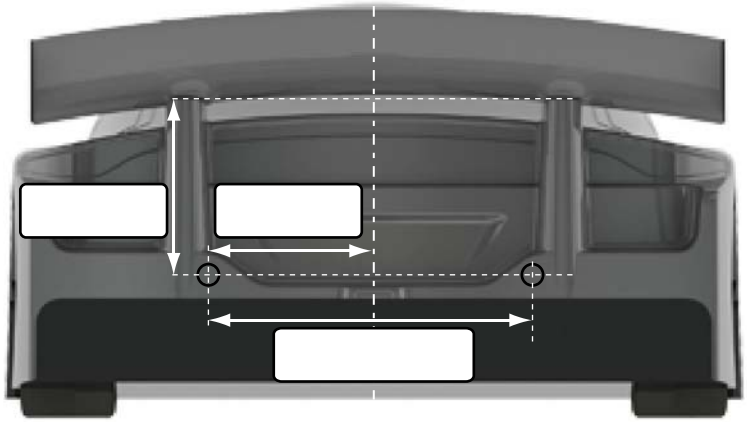

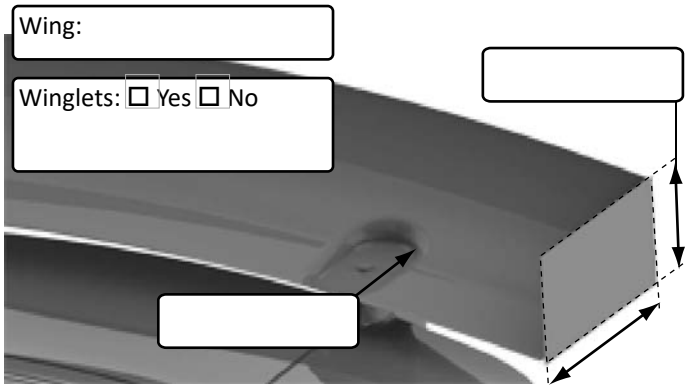

Notes