IF14 SPECIALE SET-UP SHEET

EVENT			
TRACK			
NAME		DATE	
QUAL. POSITION		FINAL POSITION	
BEST LAP		LAP / TIME	/
TEMP. AIR		TEMP. TRACK	

TRACK

TRACK SURFACE	☐ ASPHALT	☐ CARPET	
TRACK LAYOUT	☐ TECHNICAL	☐ MIXED	☐ FAST
TRACTION	☐ LOW	☐ MEDIUM	☐ HIGH

TRANSMISSION

	FRONT	REAR
GEAR DIFF OIL	☐ SOLID AXLE	
PULLEY	☐ 38/20T ☐ 40/22T	☐ STD. ☐ LOW FRICTION

PINION	T	SPUR GEAR	T	FINAL DRIVE RATIO

SHOCKS

	FRONT	REAR
MEMBRANE	☐ HARD ☐ SOFT ☐ SOFT V2	☐ HARD ☐ SOFT ☐ SOFT V2
SPRINGS		
OIL		
REBOUND (%)		
PISTONS	☐ 1.1mm ☐ 1.2mm	☐ 1.1mm ☐ 1.2mm
LENGTH	mm	mm
STABILIZER	mm	mm

TIRES

	FRONT		REAR	
TIRES				
ADDITIVE				
ADDITIVE TIMING				
TIRE WARMERS	Temp.	Timing	Temp.	Timing

MOTOR & BATTERIES

MOTOR		TIMING	
ESC		BATTERIES	

WEIGHT BALANCE

TOTAL WEIGHT	g	WEIGHT BALANCE	FRONT %	REAR %

BODY

BODY		WING	

BODY POSITION

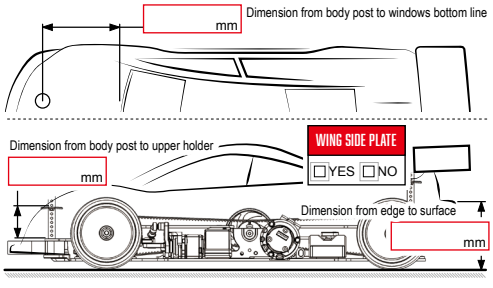

TOP DECK

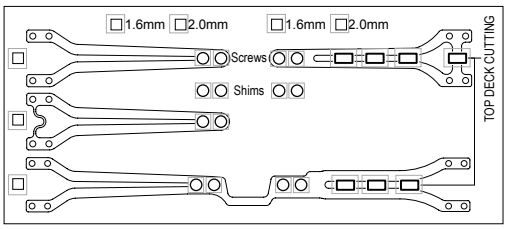

COMMENTS

FRONT

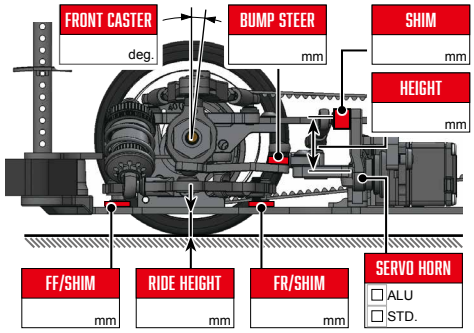

REAR

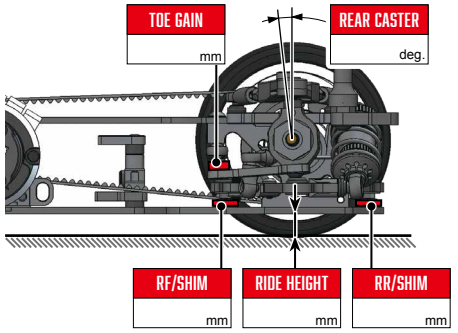

FRONT

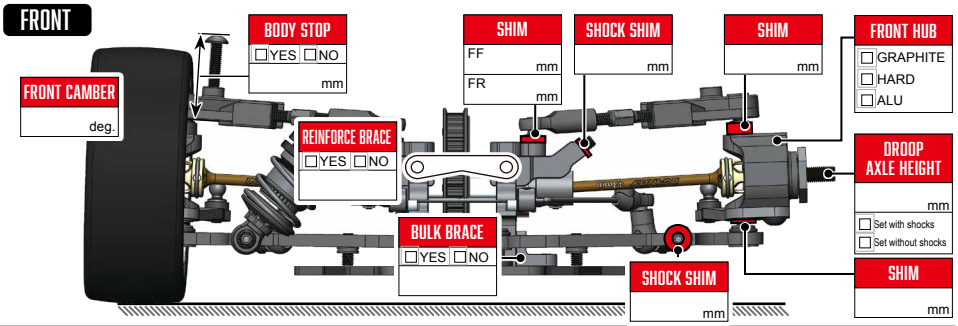

REAR

