
SR2
1/10 EP TOURING CAR KIT
X6
ARS
HBL575 SL
rcmaker

The next evolution.

What a journey it's been so far with our new touring car project. Firstly, I would like to extend my gratitude to all of our customers, supporters and team drivers that have supported us thus far. For our first car, the SP1 delivered in a lot of aspects and achieved a lot of success, more than I possibly could have imagined, if i'm honest.

The amount of learning that myself and our team have done over the past 2 years is nothing short of extraordinary. We got to put the SP1 to the test against the best drivers, teams and manufacturers in the world, for two whole years. This gave us a perfect environment to push the cars to the limit, to see our shortfalls, confirm some concepts and shape new ones.

We tested profusely, in search of performance. Several cars, several concepts, all tested individually to identify what was a step in the right direction, and what wasn't. We didn't do things just because others were doing them, we tested them on our platform to see what was right for us.

The result, the SP2. Similar concepts, taken to the next level in engineering, quality and most importantly, performance. We went back to the drawing board in all aspects, and focused on every single tiny detail when building the SP2 from the ground up. Where un-sprung weight could be removed, we removed it. Where friction could be reduced, we reduced it, where tolerances could be improved, we improved it. No stone left unturned in creating the SP2, no expense spared in bringing you the absolute best evolution we could.

Big progress, big evolution - we hope you enjoy it as much as we do!



DESIGNER
RYAN MAKER

STEP 1 - GEAR DIFF

EXPLODED VIEW

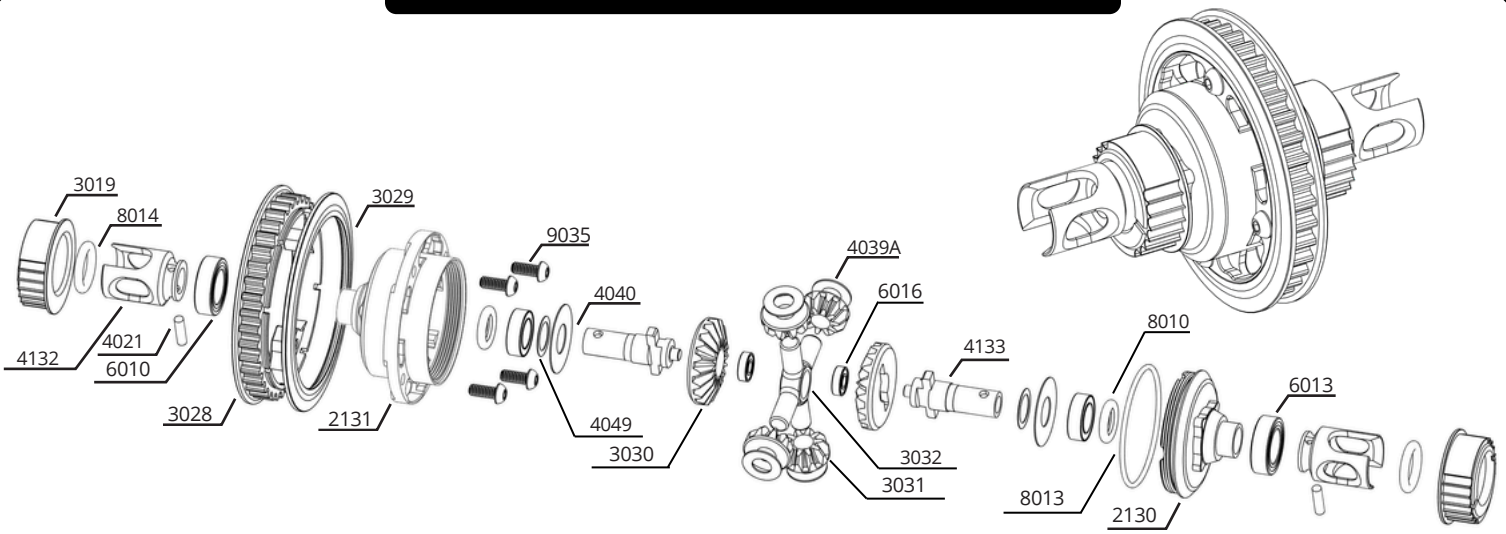

BAG A

PARTS LIST

SKU	Description	QTY
2026A	Spool Housing	1
2130	Diff Housing Small	1
2131	Diff Housing Large	1
3019	Diff/Spool Eccentric	4
3028	38 Tooth Spool/Diff Pulley	2
3029	38 Tooth Spool/Diff Pulley Side	2
3030	Internal Diff Gear Large	2
3031	Internal Diff Gear Small	4
3032	Diff Cross Pin	1
3135	Diff O-Ring & Wheel Hex Tool	1
4021	1.6 x 6mm Diff Outdrive Pin	2
4039A	Diff Satellite Gear Shim	4
4040	Diff Main Gear Shim	2
4049	5x7x0.1mm Stainless Steel Shim	2
4131	Spool Outdrive	2
4132	Diff Outdrive	2
4133	Diff Output Shaft	2
6010	6x10x3mm Metal Shield Bearing	4
6013	5x8x2.5mm Metal Shield Bearing	2
6016	2x5x1.5mm Metal Shield Bearing	2
8010	Diff Outdrive Internal O-Ring	2
8013	Diff Housing O-Ring	1
8014	Diff Outdrive Pin Retainer O-Ring	2
9025	M3x8mm Flat Head Screw	2
9035	M2x6mm Button Head Screw	8

QUICK TIPS

You can click the **"Options"** and **"Tools"** throughout the manual to open the listing on our website, to further investigate!



STEP 1.1

MAKE 2

QUICK TIPS

8010 Silicon O-Ring is Clear in colour, be sure not to use 8014 Black NBR O-Ring

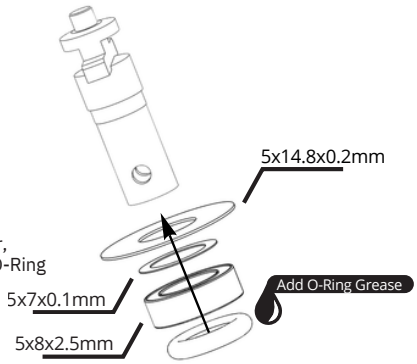

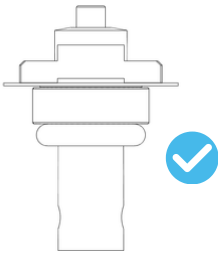

1. Add O-Ring Grease to 8010 O-ring
2. Install 4040 (5x14.8x0.2mm) Shim, followed by 4049 (5x7x0.1mm) Shim, 6013 (5x8x2.5mm) Bearing and 8010 O-ring onto 4133 shaft
3. Make 2 of this assembly

STEP 1.2

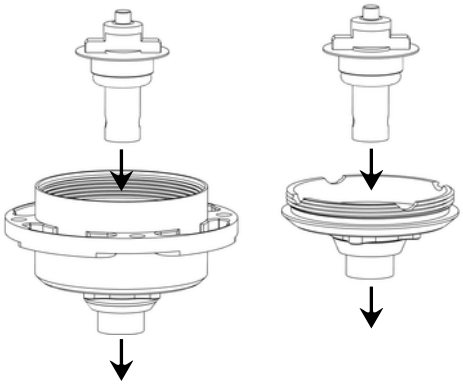

1. Install assembled output shafts into diff halves
2. Push down and rotate to ensure free movement and correct seating

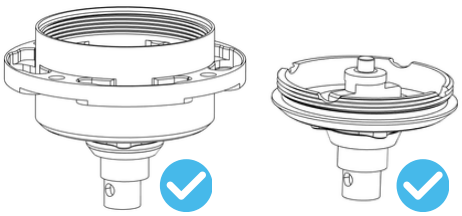

STEP 1.3

QUICK TIPS

Add a drop of silicon oil onto the face of the washer before installing the main gear to hold gear in place

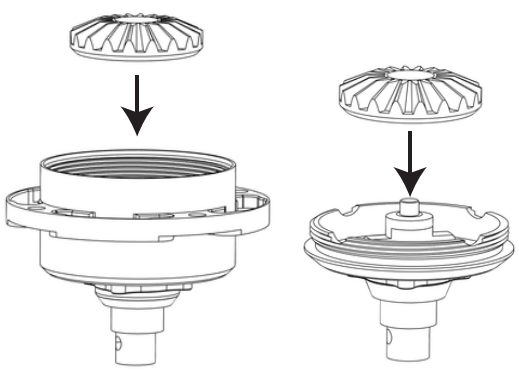

1. Insert large diff gear and locate onto cross pin
2. Repeat for both diff halves

Face of gear should sit flush with shaft face on both halves when correctly seated

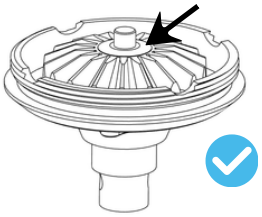

STEP 1 - GEAR DIFF

BAG A

PARTS LIST

SKU	Description	QTY
2026A	Spool Housing	1
2130	Diff Housing 1	1
2131	Diff Housing 2	1
3019	Diff/Spool Eccentric	4
3028	38 Tooth Spool/Diff Pulley	2
3029	38 Tooth Spool/Diff Pulley Side	2
3030	Internal Diff Gear Large	2
3031	Internal Diff Gear Small	4
3032	Diff Cross Pin	1
3135	Diff O-Ring & Wheel Hex Tool	1
4021	1.6 x 6mm Diff Outdrive Pin	2
4133	Diff Output Shaft	2
4039A	Diff Satellite Gear Shim	4
4040	Diff Main Gear Shim	2
4049	5x7x0.1mm Stainless Steel Shim	2
4131	Spool Outdrive	2
4132	Diff Outdrive	2
6010	6x10x3mm Metal Shield Bearing	4
6013	5x8x2.5mm Metal Shield Bearing	2
6016	2x5x1.5mm Metal Shield Bearing	2
8010	Diff Outdrive Internal O-Ring	2
8013	Diff Housing O-Ring	1
8014	Diff Outdrive Pin Retainer O-Ring	2
9025	M3x8mm Flat Head Screw	2
9035	M2x6mm Button Head Screw	8

STEP 1.4

BOTH HALVES

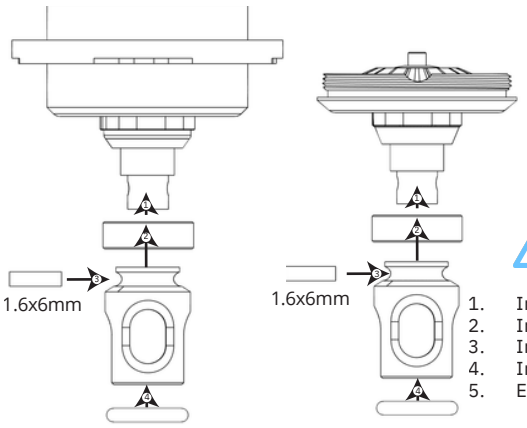

QUICK TIPS

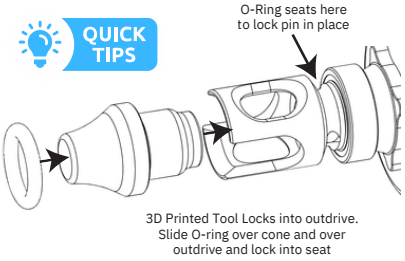

Note: 8014 O-Ring is Black in colour!

1. Install 6010 (6x10x3mm) bearing onto diff housing
2. Install 4132 Diff Outdrive onto 4133 Diff Output Shaft
3. Install 4021 (1.6x6mm) Pin into diff outdrive
4. Install 8014 O-Ring over outdrive using included 3D Printed tool
5. Ensure diff outdrives turn smoothly

STEP 1.5

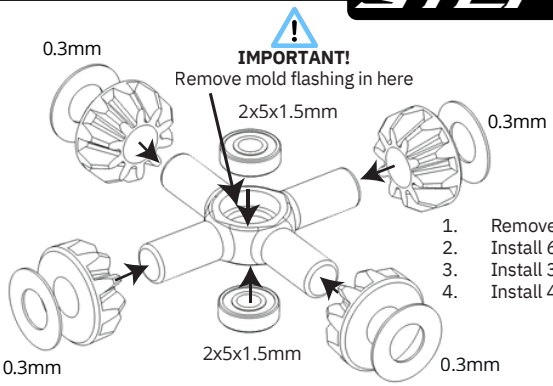

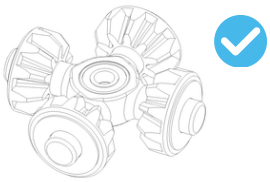

1. Remove mold flashing from 3032 cross pin so the centre hole is clear
2. Install 6016 (2x5x1.5mm) bearings into each side of cross pin
3. Install 3031 satellite gears onto cross pin
4. Install 4039A (0.3mm) satellite gear shims behind satellite gears

STEP 1.6

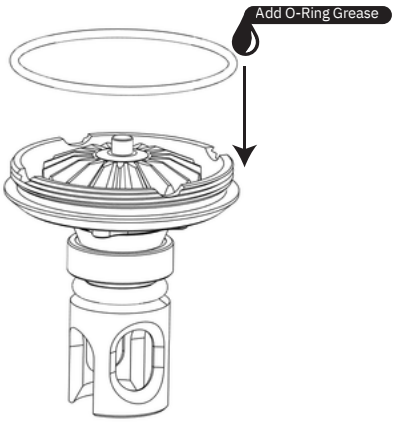

1. Apply small amount of o-ring grease onto 8013 O-ring
2. Stretch 8013 O-ring over diff case and slide down into place

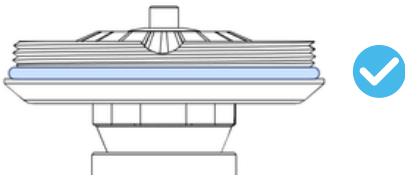

STEP 1.7

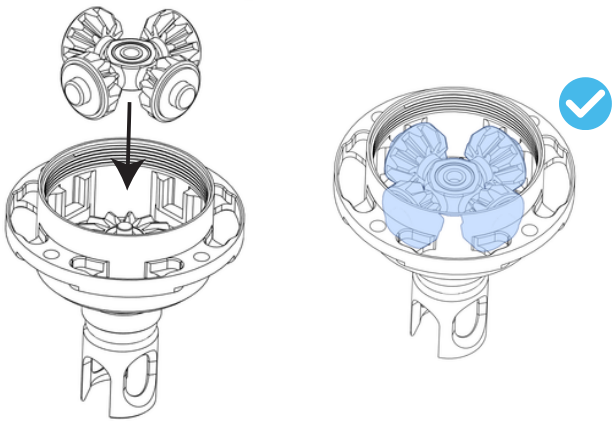

1. Install satellite gears/cross pin assembly onto diff half
2. Press down to ensure 6016 bearing is located on 4133 diff output shaft nub

STEP 1.9

1.50 GRAMS

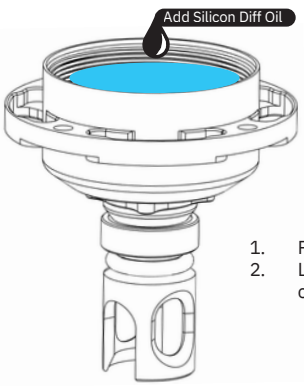

Initial Setting
21.5T: 3K Low Grip, 5K High Grip
13.5T: 4K Low Grip, 7K High Grip
MOD: 5K Low Grip, 9K High Grip

1. Place diff half on a scale, zero, and add 1.50g of oil
2. Let the diff sit until the oil seaps into the gear cavities and there are no air pockets visible

STEP 1 - GEAR DIFF

BAG A

PARTS LIST

SKU	Description	QTY
2026A	Spool Housing	1
2130	Diff Housing 1	1
2131	Diff Housing 2	1
3019	Diff/Spool Eccentric	4
3028	38 Tooth Spool/Diff Pulley	2
3029	38 Tooth Spool/Diff Pulley Side	2
3030	Internal Diff Gear Large	2
3031	Internal Diff Gear Small	4
3032	Diff Cross Pin	1
3135	Diff O-Ring & Wheel Hex Tool	1
4021	1.6 x 6mm Diff Outdrive Pin	2
4133	Diff Output Shaft	2
4039A	Diff Satellite Gear Shim	4
4040	Diff Main Gear Shim	2
4049	5x7x0.1mm Stainless Steel Shim	2
4131	Spool Outdrive	2
4132	Diff Outdrive	2
6010	6x10x3mm Metal Shield Bearing	4
6013	5x8x2.5mm Metal Shield Bearing	2
6016	2x5x1.5mm Metal Shield Bearing	2
8010	Diff Outdrive Internal O-Ring	2
8013	Diff Housing O-Ring	1
8014	Diff Outdrive Pin Retainer O-Ring	2
9025	M3x8mm Flat Head Screw	2
9035	M2x6mm Button Head Screw	8

STEP 1.10

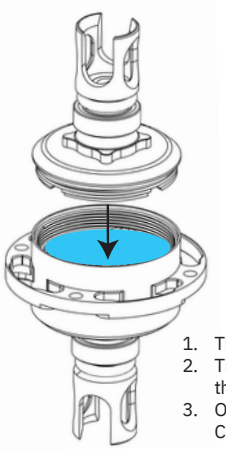



Diff Tools - One is included in Bag A, there is another in the large bag which contains all A-Jsmaller bags. Use one tool on each side to tighten diff firmly

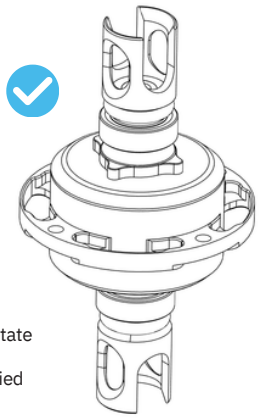

1. Thread small diff half clockwise into oil filled large diff half
2. Tighten by hand until case is closed lightly. You may need to light rotate the top outdrive to mesh gears as they meet.
3. Once case is lightly closed and diff is operating smoothly, use supplied Carbon Diff Tools on both diff halves to tighten diff firmly.

STEP 1.11



Note: Ensure 3029 is facing the correct direction.



1. Snap 3029 pulley side onto 3028 main pulley by working around the gear to seat the entire circumference into place

STEP 1.12

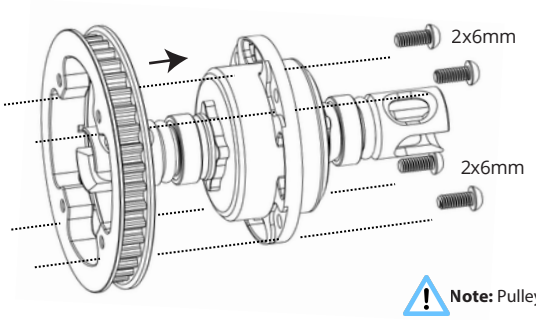

Note: Pulley direction!

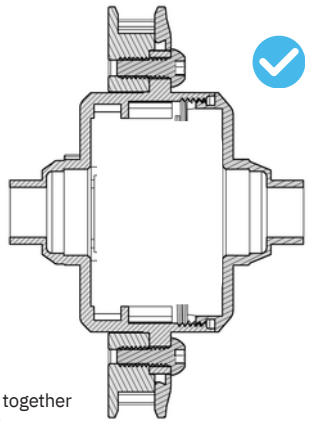

1. Locate 3029/3028 diff pulley into housing in correct orientation
2. Use 9035 (2x6mm) screws to attach pulley to diff and seal diff halves together
3. Tighten screws firmly in a cross pattern to seat and seal the assembly

OPTION PART



2064 - Alu Diff/Spool Eccentrics

STEP 1.13

QUICK TIPS

Use some white paint to mark the centre settings of the eccentric

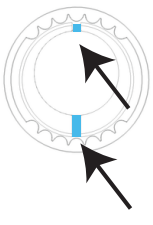

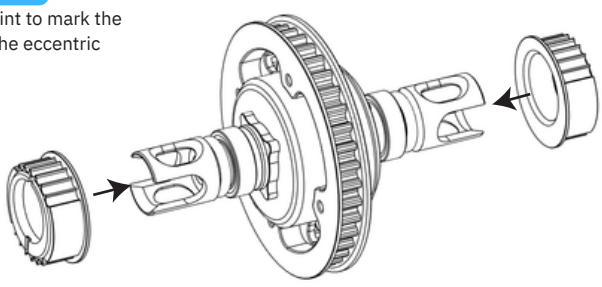

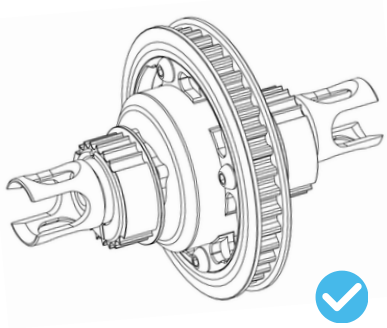

1. Install 3019 eccentrics on to 6010 bearings on each side of the diff
2. Put diff assembly aside for installation in later steps

STEP 2 - SPOOL

EXPLODED VIEW

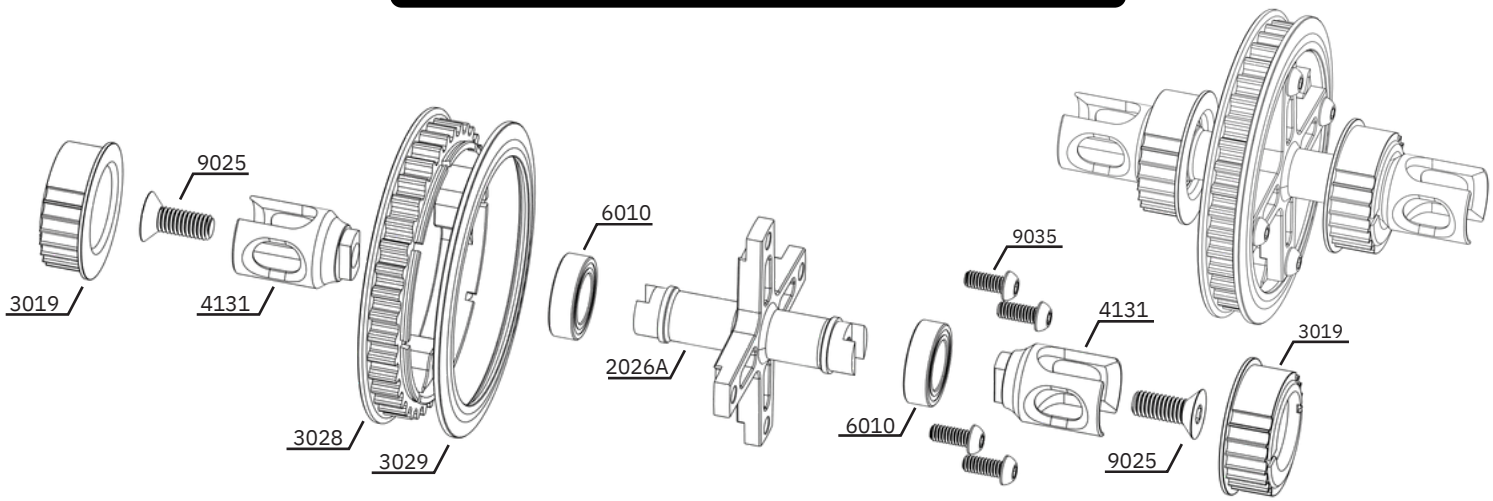

BAG A

PARTS LIST

SKU	Description	QTY
2026A	Spool Housing	1
2130	Diff Housing 1	1
2131	Diff Housing 2	1
3019	Diff/Spool Eccentric	4
3028	38 Tooth Spool/Diff Pulley	2
3029	38 Tooth Spool/Diff Pulley Side	2
3030	Internal Diff Gear Large	2
3031	Internal Diff Gear Small	4
3032	Diff Cross Pin	1
3135	Diff O-Ring & Wheel Hex Tool	1
4021	1.6 x 6mm Diff Outdrive Pin	2
4133	Diff Output Shaft	2
4039A	Diff Satellite Gear Shim	4
4040	Diff Main Gear Shim	2
4049	5x7x0.1mm Stainless Steel Shim	2
4131	Spool Outdrive	2
4132	Diff Outdrive	2
6010	6x10x3mm Metal Shield Bearing	4
6013	5x8x2.5mm Metal Shield Bearing	2
6016	2x5x1.5mm Metal Shield Bearing	2
8010	Diff Outdrive Internal O-Ring	2
8013	Diff Housing O-Ring	1
8014	Diff Outdrive Pin Retainer O-Ring	2
9025	M3x8mm Flat Head Screw	2
9035	M2x6mm Button Head Screw	8

STEP 2.1

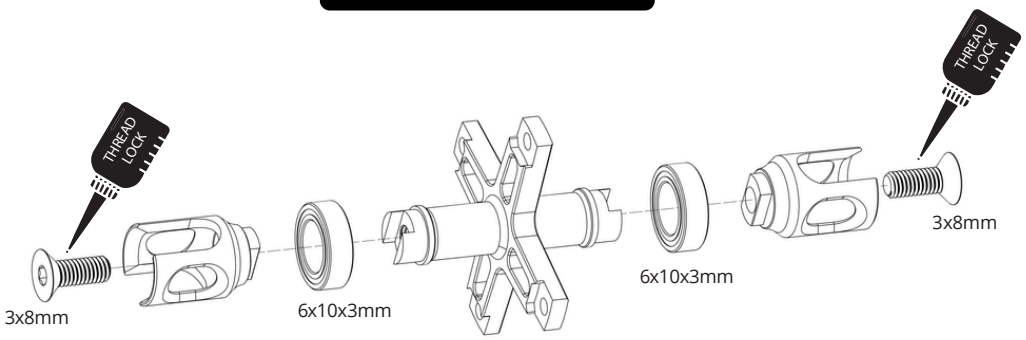

1. Install 6010 (6x10x3mm) Bearings onto 2026A Spool Housing
2. Press 4131 Steel Outdrives into spool housing
3. Apply high strength thread lock to 9025 (3x8mm) Screws and tighten lightly
4. Use driver through opposite outdrive slot to hold while tightening , then tighten **very** firmly!

STEP 2.2

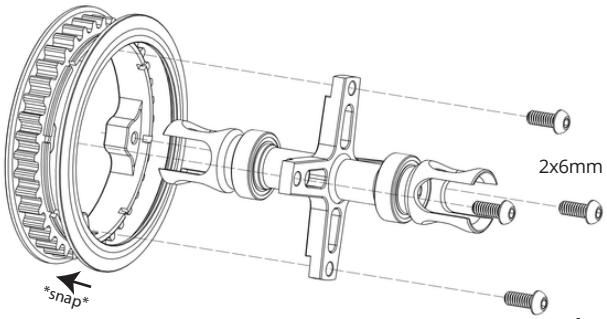

Note: Pulley Orientation

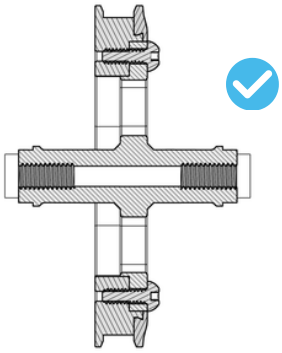

1. Snap fit 3029 pulley side onto 3028 pulley
2. Install and tighten 9035 (2x6mm) Screws to attach pulley to spool housing

STEP 2.3

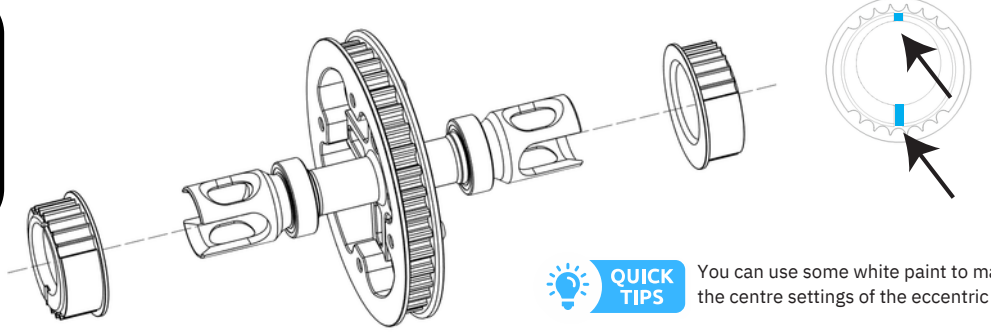

QUICK TIPS You can use some white paint to mark the centre settings of the eccentric

1. Slide 3019 eccentrics over outdrives and locate on to bearings
2. Put spool assembly aside for later installation

OPTION

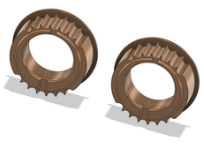

2064 - Alu Diff/Spool Eccentrics

STEP 3 - LAYSHAFT & DRIVESHAFTS

BAG B

PARTS LIST

SKU	Description	QTY
2136	Centre Layshaft Pulley Housing	1
2137	Motor Mount	1
3025	Centre Layshaft Pulley	1
4012A	Front Axle	2
4013A	Rear Axle	2
4014	Front Driveshaft Coupling	2
4015	Front Driveshaft Stud	4
4016	Rear Driveshaft Stud	2
4017	1.6x9mm Front Driveshaft Pin	4
4018	2.0mm Rear Driveshaft Pin	2
4019	Front Driveshaft Spring Clip	5
4048	M1.2 Driveshaft e-Clips	20
4116	Layshaft	1
4135	Front Driveshaft	2
4136	Rear Driveshaft	2
6013	5x8x2.5mm Bearing	1
6017	2x5x2.3mm Bearing	8
6019	5x10x4mm Bearing	1
8015	Layshaft Pulley O-Ring	1
9017	M3x5 Button Head Screw	1
9018	M3x6 Button Head Screw	1
9027	M3 x 3mm Grub Screw	2

STEP 3.1

Note: Make sure O-ring is properly seated around ears, as its quite tight.

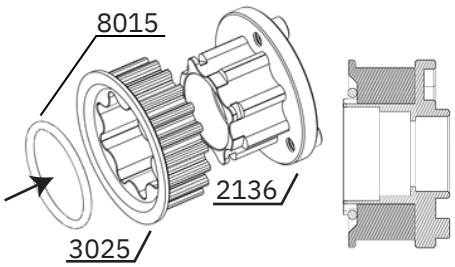

1. Slide 3025 pulley on to 2136 pulley housing
2. Stretch 8015 o-ring over pulley housing lugs until the o-ring is in place and secures pulley

STEP 3.2

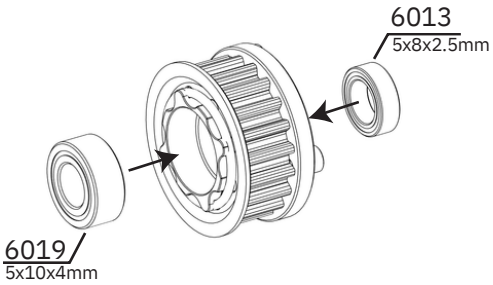

1. Push 6019 (5x10x4mm) Bearing into layshaft housing firmly from behind
2. Push 6013 (5x8x2.5mm) Bearing into layshaft housing from in front

STEP 3.3

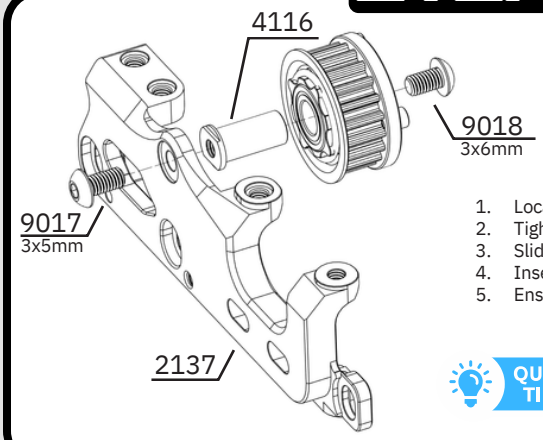

Note: Ensure layshaft key is aligned with motormount before tightening. It is a reasonably tight fit and will pull in as you tighten.

1. Locate 4116 Layshaft into 2137 Motormount
2. Tighten 9017 (3x5mm) Screw firmly to fix layshaft in place
3. Slide Pulley Assembly over Layshaft with big bearing inside
4. Insert and tighten 9018 (3x6mm) Screw to fix layshaft pulley in place
5. Ensure layshaft spins freely after tightening

QUICK TIPS

There is one spare 4049 washer left over from Bag A, you can use this on the layshaft before sliding on the pulley/bearings if you wish to remove some end float.

STEP 3.4

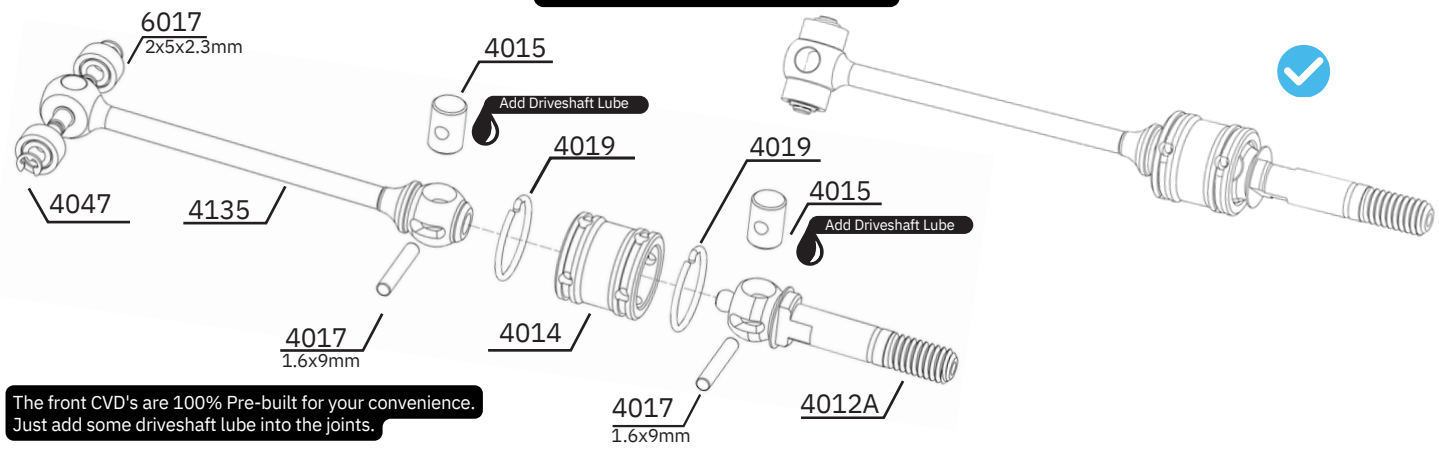

The front CVD's are 100% Pre-built for your convenience. Just add some driveshaft lube into the joints.

STEP 3.5

Bearings and e-clips are pre-built.

MAKE 2

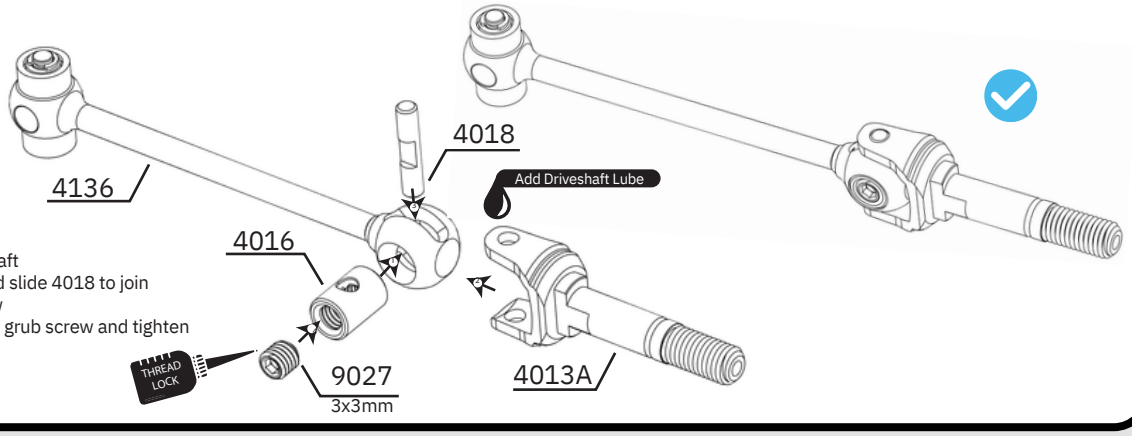

1. Install 4016 stud into 4136 driveshaft
2. Insert 4011/4016 inside 4013A and slide 4018 to join
3. Align 4018 flat spot with grub screw
4. Apply thread lock to 9027 (3x3mm) grub screw and tighten inside 4016 onto 4018's flat spot

STEP 4 - HUBS

BAG C

PARTS LIST

SKU	Description	QTY
1113	Front Steering Arms	2
1114	Rear Steering Arms	2
2034A	4.0mm Hard Anodized Wheel Hex	4
2056	3x5.5x0.5mm Shim	4
2057	3x5.5x1.0mm Shim	4
2132	Outer Wheel Hub	4
2142	M3 Threaded Insert	4
3040-1	Nylon Hex Washer	4
4117	M3 Threaded Male Insert	4
4118	4.8mm Female Polished Ball Stud	4
4120	4.3x4.6mm Male Polished Ball Stud	4
4139	6x8x0.2mm Stainless Steel Washer	4
6010	6x10x3mm Bearing	4
6020	6x11x4mm Bearing	4
9019	M3x8mm Button Head Screw	4
9038	M2.5x4mm Button Head Screw	8

STEP 4.1

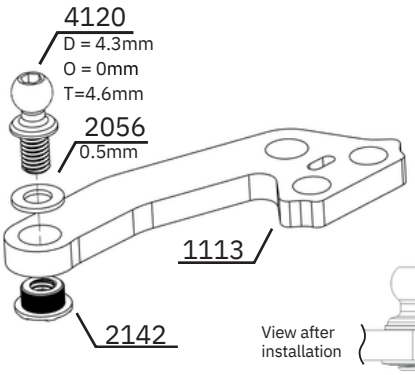

MAKE 1L & 1R

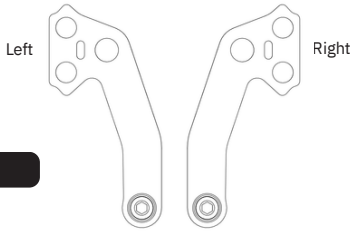

FRONT

1. Push 2142 lightly into the 4.5mm hole of 1113
2. Screw 4120 with 2056 (0.5mm) Shim underneath, into 2142
3. Screw 4120 to pull 2142 into the carbon arm
4. Make a **LEFT** and **RIGHT** mirrored pair

STEP 4.2

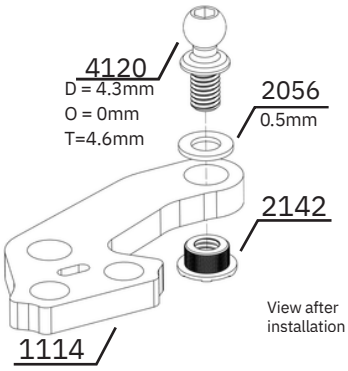

MAKE 1L & 1R

REAR

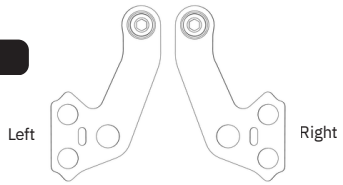



1. Push 2142 lightly into the 4.5mm hole of 1114
2. Screw 4120 with 2056 (0.5mm) Shim underneath, into 2142
3. Screw 4120 to pull 2142 into the carbon arm
4. Make a **LEFT** and **RIGHT** mirrored pair

STEP 4.3

4118 is used only to install 4117.
Do NOT leave it attached!

MAKE 1L & 1R

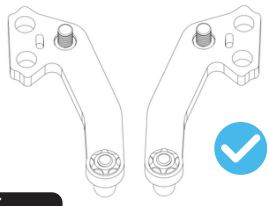

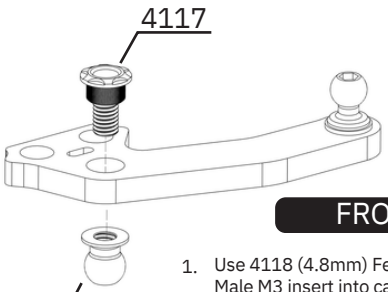

FRONT

1. Use 4118 (4.8mm) Female Ball stud to pull 4117 Male M3 insert into carbon - Note insertion direction!
2. Undo 4118 Ball and use for future step. **DO NOT leave 4118 Female Ball Stud Attached!**
3. Make a left and right

STEP 4.4

4118 is used only to install 4117.
Do NOT leave it attached!

MAKE 1L & 1R

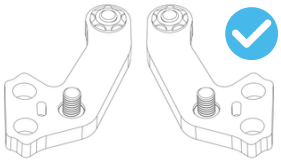

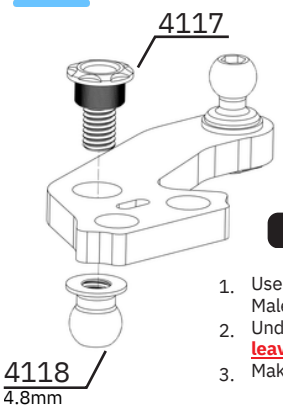

REAR

1. Use 4118 (4.8mm) Female Ball stud to pull 4117 Male M3 insert into carbon - Note insertion direction!
2. Undo 4118 Ball and use for future step. **DO NOT leave 4118 Female Ball Stud Attached!**
3. Make a left and right

STEP 4.5

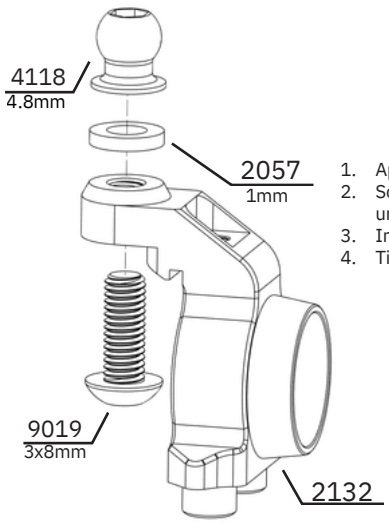

MAKE 4

1. Apply thread lock as indicated to 9019
2. Screw 9019 (3x8mm) into 2132 hub from underneath and tighten firmly
3. Insert 2057 (3x5.5x1mm) shim on top of hub
4. Tighten 4118 Ball ontop of washer firmly

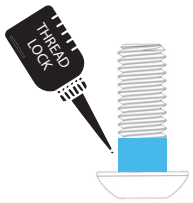

STEP 4.6 OPTION



2139 - Hub Bearing Crush Washer

MAKE 1L & 1R
FRONT

Note: Steering Arm Orientation

1. Complete using front steering arms from Step 4.1 and Hubs from Step 4.5
2. Attach steering arm to hub using 9038 (2.5x4mm) screws - make a left and a right side
3. Insert 6010 (6x10x3mm) Bearing from the outside and 6020 (6x11x4mm) Bearing from the inside into the hub

STEP 4 - HUBS

BAG C

PARTS LIST

SKU	Description	QTY
1113	Front Steering Arms	2
1114	Rear Steering Arms	2
2034A	4.0mm Hard Anodized Wheel Hex	4
2056	3x5.5x0.5mm Shim	4
2057	3x5.5x1.0mm Shim	4
2132	Outer Wheel Hub	4
2142	M3 Threaded Insert	4
3040-1	Nylon Hex Washer	4
4117	M3 Threaded Male Insert	4
4118	4.8mm Female Polished Ball Stud	4
4120	4.3x4.6mm Male Polished Ball Stud	4
4139	6x8x0.2mm Stainless Steel Washer	4
6010	6x10x3mm Bearing	4
6020	6x11x4mm Bearing	4
9019	M3x8mm Button Head Screw	4
9038	M2.5x4mm Button Head Screw	8

STEP 4.7

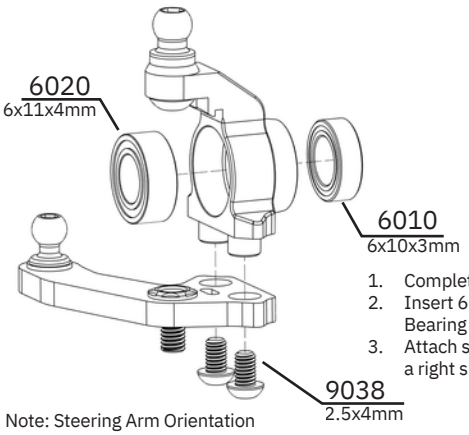

Note: Steering Arm Orientation

OPTION

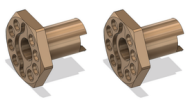

2034-1 - 3.5mm Wheel Hex

MAKE 1L & 1R

REAR

1. Complete using front steering arms from Step 4.2 and Hubs from Step 4.5
2. Insert 6010 (6x10x3mm) Bearing from the outside and 6020 (6x11x4mm) Bearing from the inside into the hub
3. Attach steering arm to hub using 9038 (2.5x4mm) screws - make a left and a right side

Ensure arms are assembled correctly as illustrated

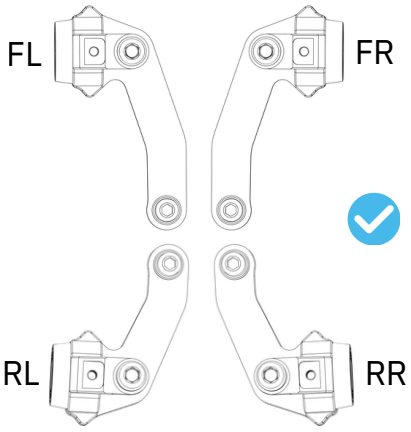

STEP 4.8

LEFT & RIGHT

FRONT

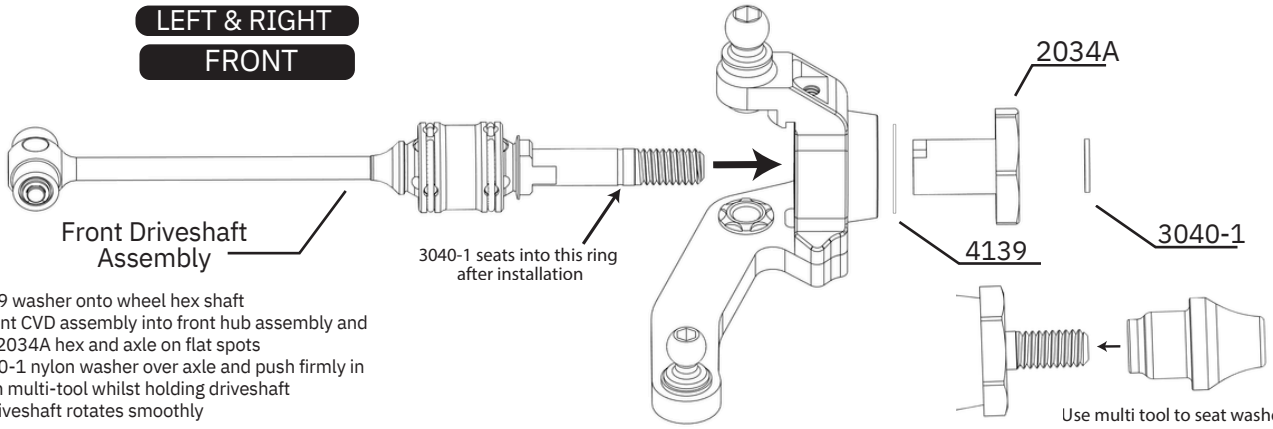

1. Slide 4139 washer onto wheel hex shaft
2. Insert Front CVD assembly into front hub assembly and interlock 2034A hex and axle on flat spots
3. Push 3040-1 nylon washer over axle and push firmly in place with multi-tool whilst holding driveshaft
4. Ensure driveshaft rotates smoothly

STEP 4.9

LEFT & RIGHT

REAR

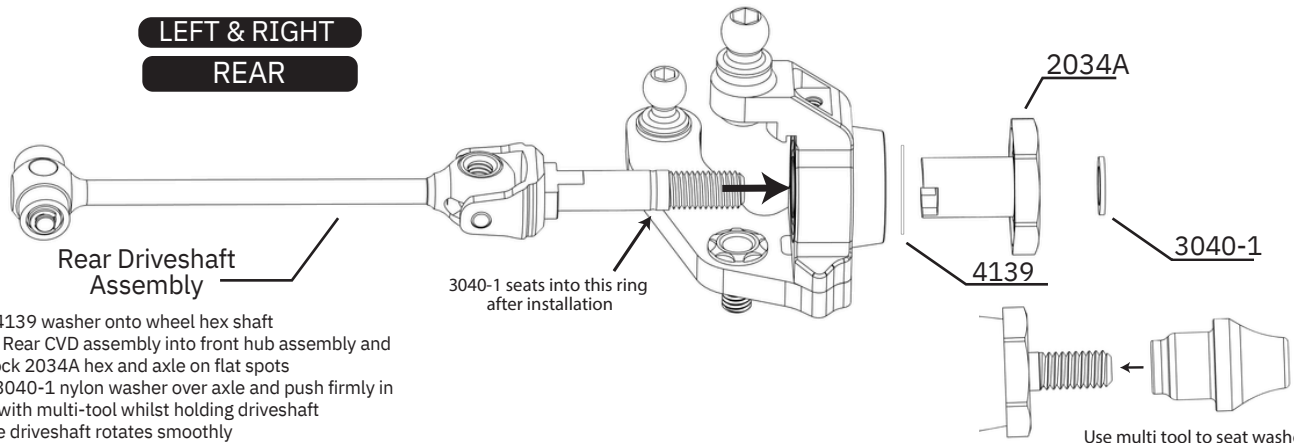

1. Slide 4139 washer onto wheel hex shaft
2. Insert Rear CVD assembly into front hub assembly and interlock 2034A hex and axle on flat spots
3. Push 3040-1 nylon washer over axle and push firmly in place with multi-tool whilst holding driveshaft
4. Ensure driveshaft rotates smoothly

STEP 5 - ARMS

BAG D

PARTS LIST

SKU	Description	QTY
1021	Suspension Arm Clips	12
1111	Front Suspension Arm	2
1112	Rear Suspension Arm	2
2057	3x5.5x1.0mm Shim	4
2123	4.8mm Anti-Roll Bar Ball	4
2142	M3 Threaded Insert	4
3010	Drop Screw Insert	4
3026A	POM 5.0mm Ball Cup	16
3118	4.8mm Anti-Roll Bar Ball Cup	4
3134	5.0mm POM Ball Cup Tool	1
4119	5.0mm Female Polished Ball Stud	12
4121	4.3x6.0mm Male Polished Ball Stud (+1.0mm)	4
8018	4.5x1.2mm O-Ring	4
9011	M2x5mm Button Head Screw	4
9039	M4x6mm Grub Screw	4

QUICK TIPS

Assembling this part of the car is very important to ensure you have smooth suspension with minimal play. It is a bit tedious so we suggest taking your time.

We have created a video on the installation process which was for the SP1, and also applicable to the SP2. Please take a look!



OPTION



8018 - 4.5x1.2mm O-Ring (4)

8018 can be used in place of 1021 carbon fiber clips. They provide slightly more cushioning of the suspension which can be helpful on bumpy and low traction tracks especially.

STEP 5.1

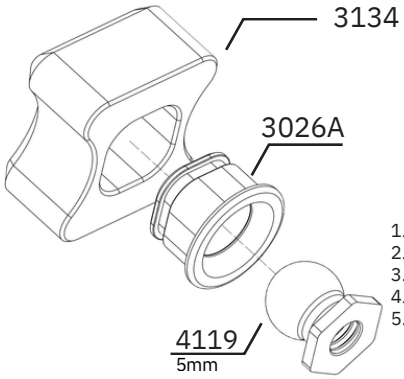

MAKE 12

NOTE: 4 additional 3026A have been included as spares, just in case one cracks upon insertion of 4119 ball.

1. Insert 3026A into Ball Cup tool
2. Place 4119 on a flat surface with the ball facing upwards
3. Push ball cup tool with 3026A inside down onto 4119 ball stud
4. Press slowly but firmly until the ball pops into the cup
5. Remove 3026A/4119 from the tool and repeat for all 12 ball cups

STEP 5.2

12 TIMES

TOP VIEW



1. Using pliers, squeeze gently on the sides of 3026A
2. Turn the cup 90 degrees and squeeze gently on the other side of 3026A
3. After this process, the ball should be smooth and free inside the cup
4. Repeat above process, applying slightly more pressure until ball is free
5. Too much force could result in cracking, or excessive play, so pay close attention!
6. **Repeat for all 12 balls and cups until they are all feeling free and smooth**

STEP 5.3

1. Slide Ball Cups into holes in 1111 Suspension Arm
2. Slide 1021 clip onto ball cup to fasten in place
   Note orientation of the ball cups, as outer is inserted from the opposite side as inner!

MAKE 1 LEFT & 1 RIGHT

FRONT

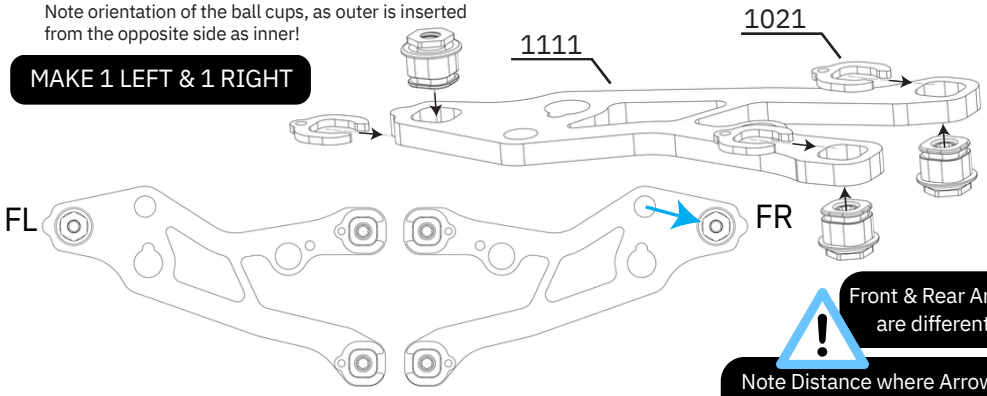

Front & Rear Arms are different!

Note Distance where Arrow is compared to rear

QUICK TIPS

If the cup is a tight fit inside the carbon, sometimes it can cause the ball to bind up once installed. If thats the case, remove a small amount of material from the carbon with a round file, and re-install. Repeat until the ball is free once installed in the arm. Apply the same method for Step 5.4

STEP 5.4

REAR

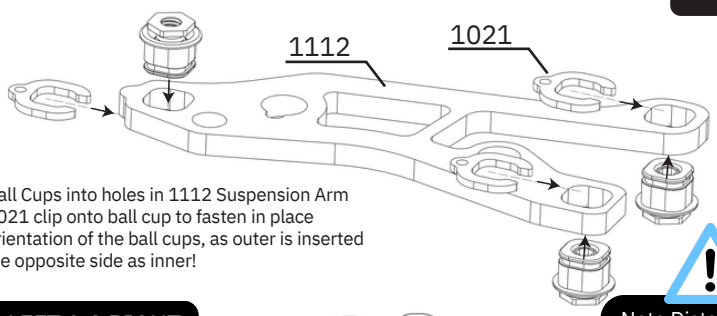

1. Slide Ball Cups into holes in 1112 Suspension Arm
2. Slide 1021 clip onto ball cup to fasten in place
3. Note orientation of the ball cups, as outer is inserted from the opposite side as inner!

Front & Rear Arms are different!

Note Distance where Arrow is compared to front

MAKE 1 LEFT & 1 RIGHT

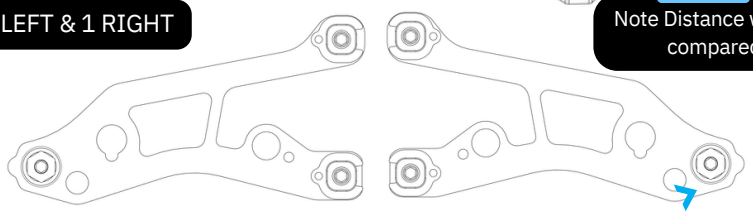

STEP 5 - ARMS

BAG D

PARTS LIST

SKU	Description	QTY
1021	Suspension Arm Clips	12
1111	Front Suspension Arm	2
1112	Rear Suspension Arm	2
2057	3x5.5x1.0mm Shim	4
2123	4.8mm Anti-Roll Bar Ball	4
2142	M3 Threaded Insert	4
3010	Drop Screw Insert	4
3026A	POM 5.0mm Ball Cup	16
3118	4.8mm Anti-Roll Bar Ball Cup	4
3134	5.0mm POM Ball Cup Tool	1
4119	5.0mm Female Polished Ball Stud	12
4121	4.3x6.0mm Male Polished Ball Stud (+1.0mm)	4
8018	4.5x1.2mm O-Ring	4
9011	M2x5mm Button Head Screw	4
9039	M4x6mm Grub Screw	4

QUICK TIPS

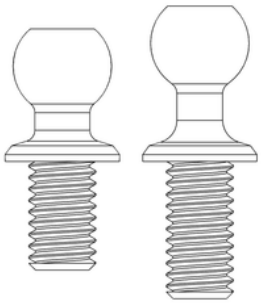

4120 4121

There are 2 types of male ball studs in this kit, 4120 and 4121. 4121 has a 1mm higher neck height, and a longer thread than 4120.

D refers to the ball diameter
O refers to the ball height offset
T refers to the thread length

QUICK TIPS

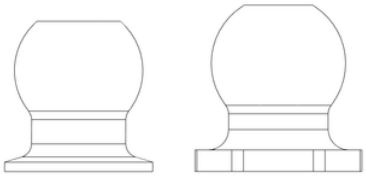

4118 4119

There are 2 types of female male ball studs in this kit, 4118 and 4119. 4118 is 4.8mm in diameter and features a 2.5mm hex. 4119 is 5.0mm in diameter and features both a 2.5mm hex and a 5.5mm hex on the base.

STEP 5.5

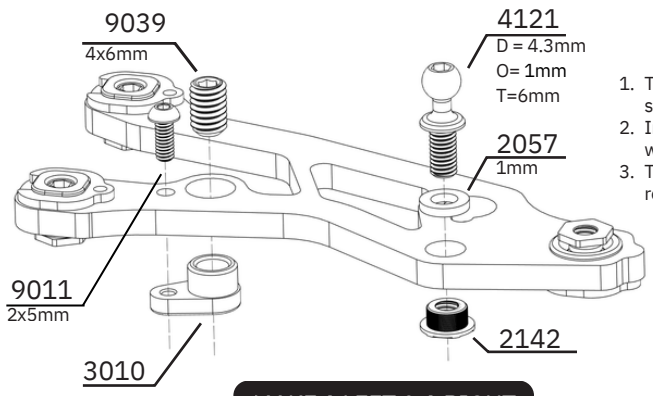

MAKE 1 LEFT & 1 RIGHT

FRONT

1. Tighten 4121 Ball Stud with 2057 (1mm) shim underneath to pull 2142 insert into arm
2. Insert 3010 into arm and tighten in place with 9011 (2x5mm) Screw
3. Thread in 9039 (4x6mm) grub screw with roughly 2.0mm protruding

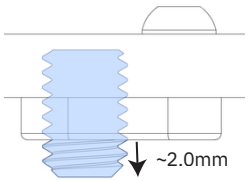

STEP 5.6

REAR

1. Tighten 4121 Ball Stud with 2057 (3x5.5x1mm) shim underneath to pull 2142 insert into arm
2. Insert 3010 into arm and tighten in place with 9011 (2x5mm) Screw
3. Thread in 9039 (4x6mm) grub screw with roughly 2.5mm protruding

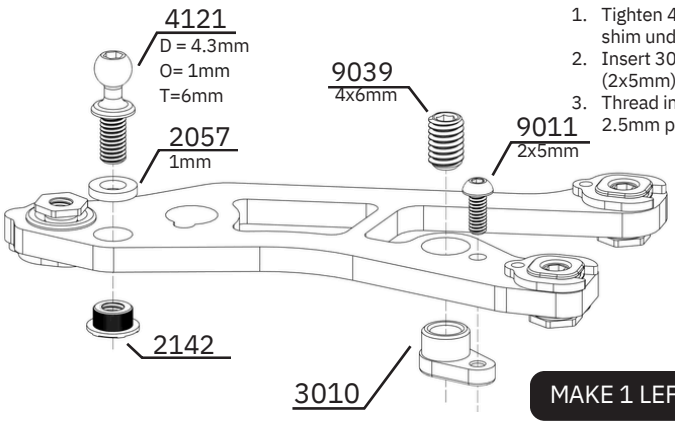

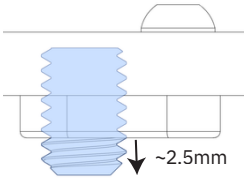

MAKE 1 LEFT & 1 RIGHT

STEP 5.7

QUICK TIPS Put 2123 onto 2mm driver first, to aid insertion into 3118

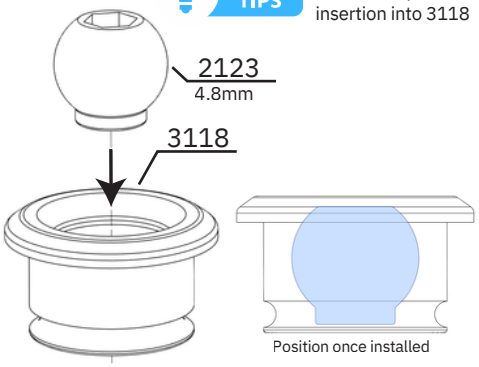

1. Install 2123 (4.8mm) Ball into 3118 cup from above
2. Ensure ball spins freely inside cup. If not, lightly squeeze cup with pliers until free

STEP 5.8

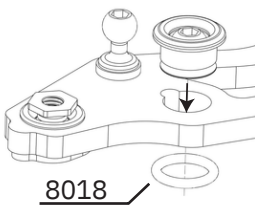

FRONT

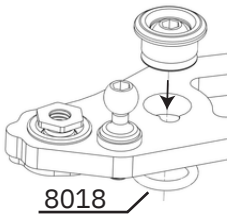

REAR

1. Slide Anti-roll bar ball cup and stuf into suspension arms from above
2. Use 8018 O-ring to lock ball up into place. Ensure o-ring is seated correctly!

MAKE 1 LEFT & 1 RIGHT

FRONT

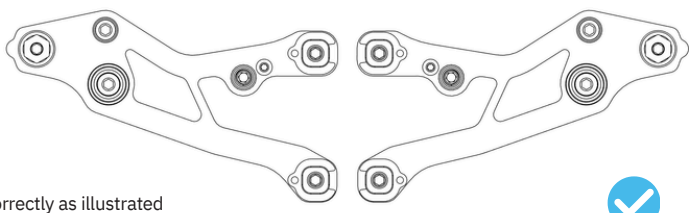

Ensure arms are assembled correctly as illustrated

REAR

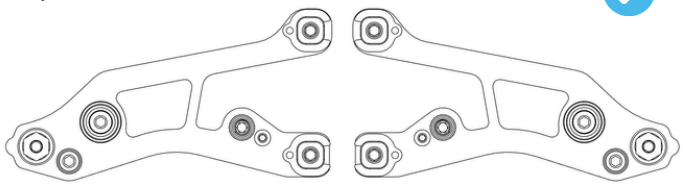

STEP 6 - CHASSIS BASE

BAG E

PARTS LIST

SKU	Description	QTY
1029	0.5mm x 7.5mm Carbon Weight Shim	2
1110	2.25mm Carbon Fiber Chassis	1
1115	Front Upper Bulkheads (L & R)	2
1116	Rear Left Upper Bulkhead/Body Mount	1
1117	Rear Right Upper Bulkhead/Body Mount	1
1119	2.0mm Carbon Topdeck - Front	1
1120	2.0mm Carbon Topdeck Med Flex - Rear	1
2035	Upper Bulkhead Inserts - 1 Dot	8
2036	Upper Bulkhead Inserts - 2 Dot	2
2056	3x5x5x0.5mm Shim	2
2057	3x5.5x1mm Shim	1
2058	3x5.5x2mm Shim	1
2060	3x8x1mm Shim	4
2061	3x8x1.5mm Shim	4
2074	3x5.5x5mm Shim	2
2110	Front Left/Rear Right Bulkhead	2
2111	Front Right/Rear Left Bulkhead	2
2112	Shock Bulkhead Mount	4
3026A	POM 5.0mm Ball Cup	4
3118	Anti-Roll Bar Ball Cup	4
3134	5.0mm POM Ball Cup Tool	1
4043	Topdeck Motormount Screw	2
4119	5.0mm Female Polished Ball Stud	8
4120	4.3x4.6mm Male Polished Ball Stud	2
4128	Bumper Stopper	2
5026	Centre Chassis Weight - Front (not in steel kit)	1
5027	Centre Chassis Weight - Rear (not in steel kit)	1
6021	3x7x3mm Bearing	2
7013	351 Bando Drive Belt	2
9010	M2x6mm Cap Head Screw	8
9017	M3x5mm Button Head Screw	12
9018	M3x6mm Button Head Screw	8
9019	M3x8mm Button Head Screw	8
9021	M3x12mm Button Head Screw	1
9022	M3x16mm Button Head Screw	1
9032	M3x5mm 110deg Flat Head Screw	8
9036	M3x6mm 110deg Flat Head Screw	12

1110 - 2.2mm Carbon

Best for low to medium traction asphalt

2142 - 1.5mm Aluminium

Best “all rounder” - Suits low to medium traction asphalt and carpet tracks

4138 - 1.2mm Spring Steel

Suits medium & high traction asphalt and carpet tracks. Easier to drive and increases corner speed

STEP 6.1

Rear of chassis

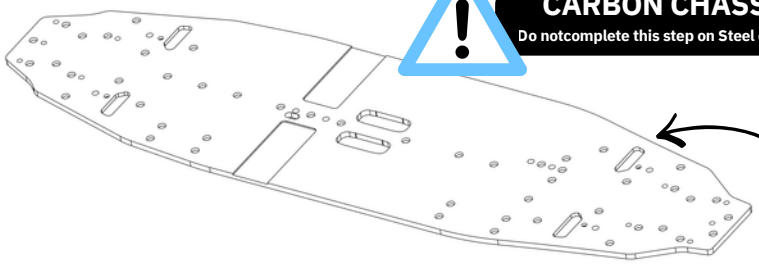

CARBON CHASSIS ONLY!

Do notcomplete this step on Steel or Aluminium Chassis!

Front of chassis

Lightly sand edges with wet and dry sandpaper to remove sharpness

You may also choose to glue the egdes of the chassis with CA for increased strength.

STEEL CHASSIS ONLY

VERY IMPORTANT INFORMATION FOR FOLLOWING STEPS FOR STEEL CHASSIS KITS

Due to the thinness of the steel chassis, the taper of the countersunk screws can narrowly protrude through the top face of the chassis. Included in the chassis bag, are 2146 special countersunk washers, that are countersink to allow space for the head of the screw, and allow the screws to tighten correctly.

These 2146 washers are 0.5mm in thickness, and are to be installed between the chassis, and the 2060 and 2061 washers in the following steps. Ensure the chamfered side is facing downwards when installing. The total roll centre after adding these shims will be 1.5mm at the front and 2.0mm at the rear.

When using the steel chassis, these special washers must be used in this location. So when adding or removing roll centre shims, always make sure these washers are installed directly on-top of the chassis plate. These washers are anodized bronze to make them easy to identify.

Please see cross section below to identify correct installation. 2146 is omitted in future steps so please ensure this step is understood.

2146 is located in the separate unlabelled bumper bag

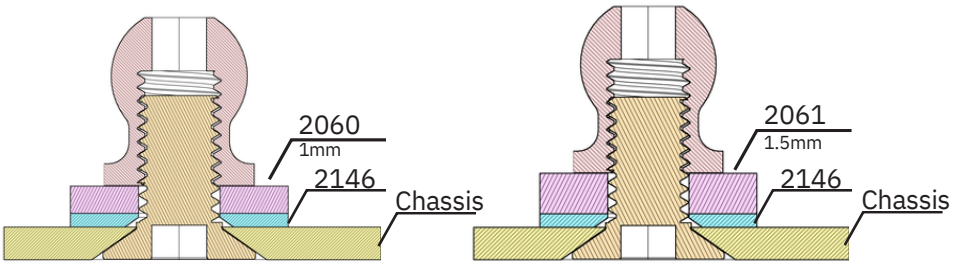

FRONT

REAR

3 CHASSIS OPTIONS

1110 - 2.2mm Carbon

2142 - 1.5mm Aluminium



4138 - 1.2mm Spring Steel

STEP 6 - CHASSIS BASE

BAG E

PARTS LIST

SKU	Description	QTY
1029	0.5mm x 7.5mm Carbon Weight Shim	2
1110	2.25mm Carbon Fiber Chassis	1
1115	Front Upper Bulkheads (L & R)	2
1116	Rear Left Upper Bulkhead/Body Mount	1
1117	Rear Right Upper Bulkhead/Body Mount	1
1119	2.0mm Carbon Topdeck - Front	1
1120	2.0mm Carbon Topdeck Med Flex - Rear	1
2035	Upper Bulkhead Inserts - 1 Dot	8
2036	Upper Bulkhead Inserts - 2 Dot	2
2056	3x5x5x0.5mm Shim	2
2057	3x5.5x1mm Shim	1
2058	3x5.5x2mm Shim	1
2060	3x8x1mm Shim	4
2061	3x8x1.5mm Shim	4
2074	3x5.5x5mm Shim	2
2110	Front Left/Rear Right Bulkhead	2
2111	Front Right/Rear Left Bulkhead	2
2112	Shock Bulkhead Mount	4
3026A	POM 5.0mm Ball Cup	4
3118	Anti-Roll Bar Ball Cup	4
3134	5.0mm POM Ball Cup Tool	1
4043	Topdeck Motormount Screw	2
4119	5.0mm Female Polished Ball Stud	8
4120	4.3x4.6mm Male Polished Ball Stud	2
4128	Bumper Stopper	2
5026	Centre Chassis Weight - Front (not in steel kit)	1
5027	Centre Chassis Weight - Rear (not in steel kit)	1
6021	3x7x3mm Bearing	2
7013	351 Bando Drive Belt	2
9010	M2x6mm Cap Head Screw	8
9017	M3x5mm Button Head Screw	12
9018	M3x6mm Button Head Screw	8
9019	M3x8mm Button Head Screw	8
9021	M3x12mm Button Head Screw	1
9022	M3x16mm Button Head Screw	1
9032	M3x5mm 110deg Flat Head Screw	8
9036	M3x6mm 110deg Flat Head Screw	12

STEP 6.2

ENSURE ABOVE STEPS ARE FOLLOWED FOR STEEL CHASSIS KITS - THE ADDITIONAL SHIMS ARE NOT PICTURED IN BELOW DIAGRAMS

Front Right Arm

Front Left Arm

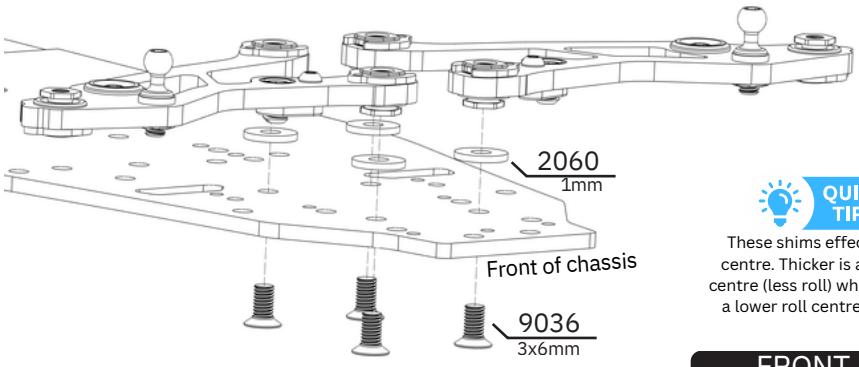

QUICK TIPS

These shims effect your roll centre. Thicker is a higher roll centre (less roll) whilst thinner is a lower roll centre (more roll)

FRONT

1. Attach front arms from Step 5 to chassis using with 2060 (3x8x1mm) shim in between
2. Use 2.5mm Hex to hold the ball while tightening 9036 (3x6mm) with a 2mm hex
3. Ensure arms move freely. If not, loosening and re-tightening screws can re-seat them.
   If you are still having trouble getting the arms free, ensure the balls are free in the cups. If not, remove the cup from the arm and crimp it lightly with pliers until it's free and re-install

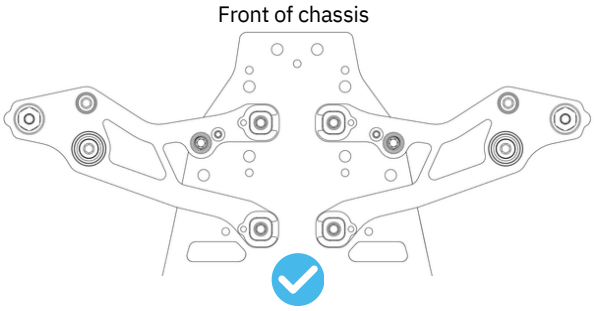

STEP 6.3

ENSURE ABOVE STEPS ARE FOLLOWED FOR STEEL CHASSIS KITS - THE ADDITIONAL SHIMS ARE NOT PICTURED IN BELOW DIAGRAMS

Rear Left Arm

Rear Right Arm

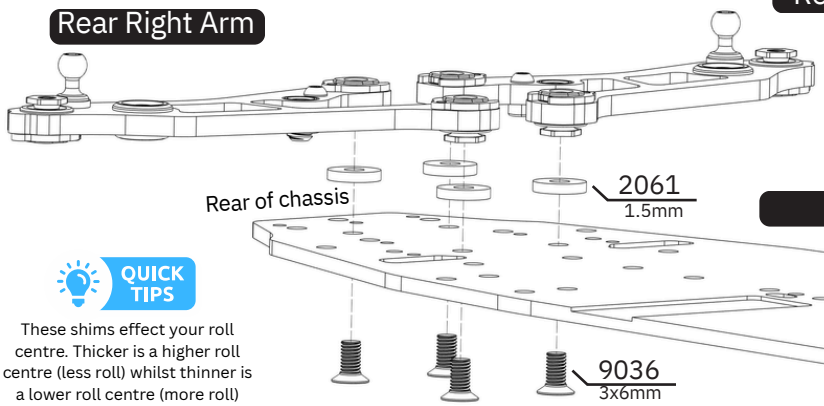

REAR

QUICK TIPS

These shims effect your roll centre. Thicker is a higher roll centre (less roll) whilst thinner is a lower roll centre (more roll)

1. Attach rear arms from Step 5 to chassis using with 2061 (3x8x1.5mm) shim in between
2. Use 2.5mm Hex to hold the ball while tightening 9036 (3x6mm) with a 2mm hex
3. Ensure arms move freely. If not, loosening and re-tightening screws can re-seat them.
   If you are still having trouble getting the arms free, ensure the balls are free in the cups. If not, remove the cup from the arm and crimp it lightly with pliers until it's free and re-install

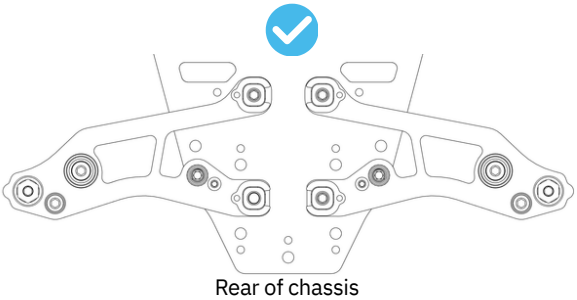

STEP 6 - CHASSIS BASE

BAG E

PARTS LIST

SKU	Description	QTY
1029	0.5mm x 7.5mm Carbon Weight Shim	2
1110	2.25mm Carbon Fiber Chassis	1
1115	Front Upper Bulkheads (L & R)	2
1116	Rear Left Upper Bulkhead/Body Mount	1
1117	Rear Right Upper Bulkhead/Body Mount	1
1119	2.0mm Carbon Topdeck - Front	1
1120	2.0mm Carbon Topdeck Med Flex - Rear	1
2035	Upper Bulkhead Inserts - 1 Dot	8
2036	Upper Bulkhead Inserts - 2 Dot	2
2056	3x5x5x0.5mm Shim	2
2057	3x5.5x1mm Shim	1
2058	3x5.5x2mm Shim	1
2060	3x8x1mm Shim	4
2061	3x8x1.5mm Shim	4
2074	3x5.5x5mm Shim	2
2110	Front Left/Rear Right Bulkhead	2
2111	Front Right/Rear Left Bulkhead	2
2112	Shock Bulkhead Mount	4
3026A	POM 5.0mm Ball Cup	4
3118	Anti-Roll Bar Ball Cup	4
3134	5.0mm POM Ball Cup Tool	1
4043	Topdeck Motormount Screw	2
4119	5.0mm Female Polished Ball Stud	8
4120	4.3x4.6mm Male Polished Ball Stud	2
4128	Bumper Stopper	2
5026	Centre Chassis Weight - Front (not in steel kit)	1
5027	Centre Chassis Weight - Rear (not in steel kit)	1
6021	3x7x3mm Bearing	2
7013	351 Bando Drive Belt	2
9010	M2x6mm Cap Head Screw	8
9017	M3x5mm Button Head Screw	12
9018	M3x6mm Button Head Screw	8
9019	M3x8mm Button Head Screw	8
9021	M3x12mm Button Head Screw	1
9022	M3x16mm Button Head Screw	1
9032	M3x5mm 110deg Flat Head Screw	8
9036	M3x6mm 110deg Flat Head Screw	12

STEP 6.4

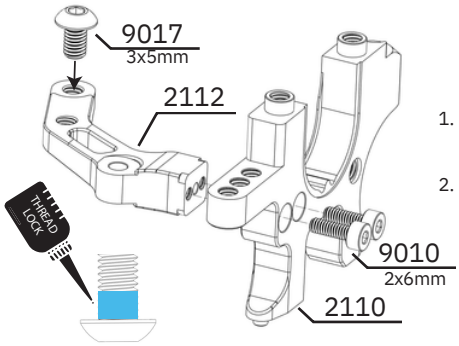

REAR RIGHT

1. Attach 2112 Shock Bulkhead Mount with 9010 (2x6mm) screws to 2110 Bulkhead in correct orientation
2. Apply thread lock as indicated to 9017 (3x5mm) screw and install firmly into 2112 from above

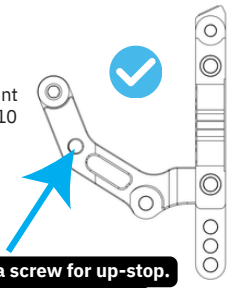

2112 has the ability to use a screw for up-stop.
Up-stop set up instructions on page 36

STEP 6.5

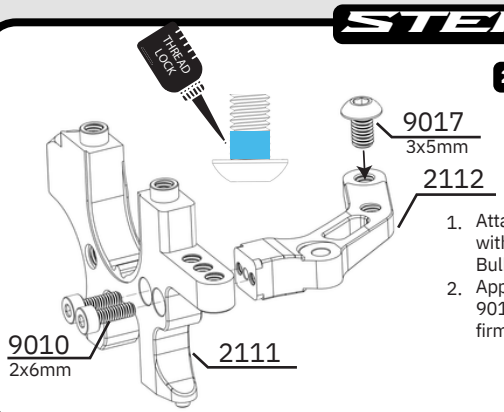

2112 has the ability to use a screw for up-stop.
Up-stop set up instructions on page 36

REAR LEFT

1. Attach 2112 Shock Bulkhead Mount with 9010 (2x6mm) screws to 2111 Bulkhead in correct orientation
2. Apply thread lock as indicated to 9017 (3x5mm) screw and install firmly into 2112 from above

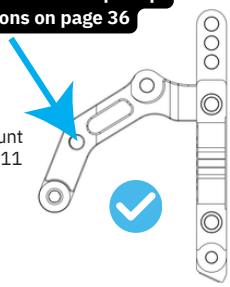

STEP 6.6

FRONT LEFT

FRONT RIGHT

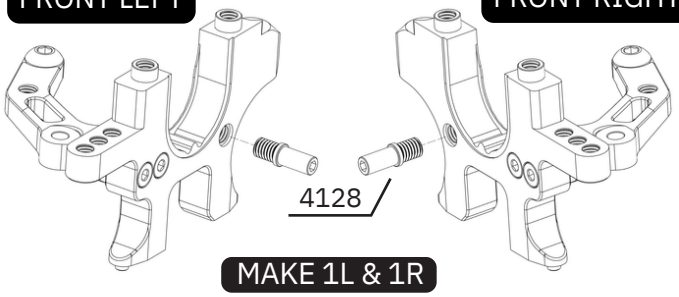

MAKE 1L & 1R

FRONT

1. Attach 4128 bumper stopper to one left bulkhead assembly using a 1.5mm hex, and another to one right bulkhead assembly to make a mirrored pair.

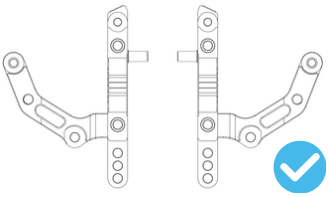

STEP 6.7

REAR

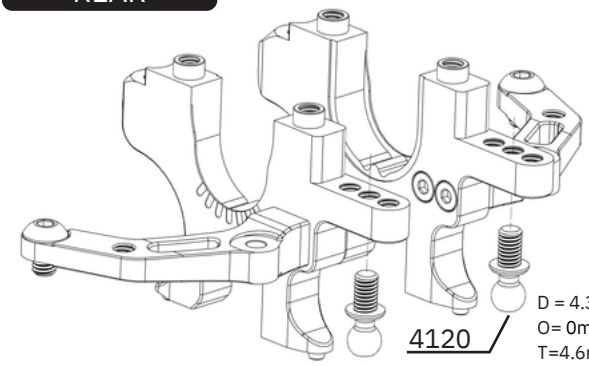

1. Using the rear pair of bulkheads, Screw 4120 into the centre screw hole on the bulkheads from underneath
2. Ensure the ball studs are tightened all the way and seated inside the bulkhead. There should be 1.5mm of thread protruding through the other side of the bulkhead.

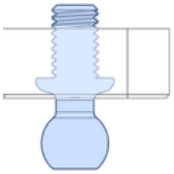

Ensure bulkheads are assembled correctly as illustrated

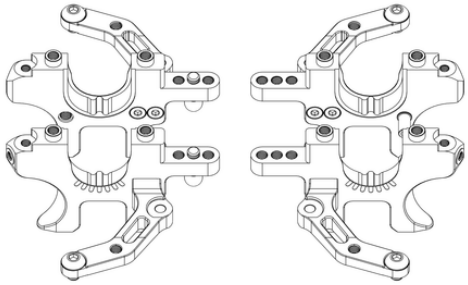

REAR

FRONT

STEP 6 - CHASSIS BASE

STEP 6.8

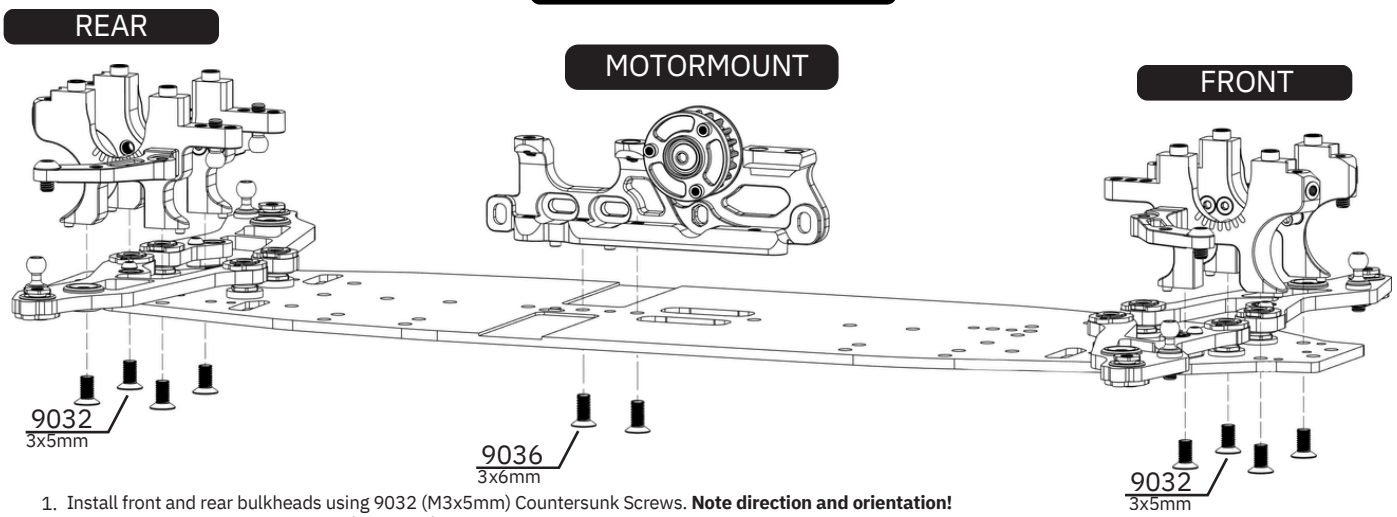

1. Install front and rear bulkheads using 9032 (M3x5mm) Countersunk Screws. **Note direction and orientation!**
2. Install motormount using 2x 9036 (M3x6mm) Countersunk Screws. **Initial setting is the 2 screws directly behind the layshaft**

MOTORMOUNT FLEX GUIDE

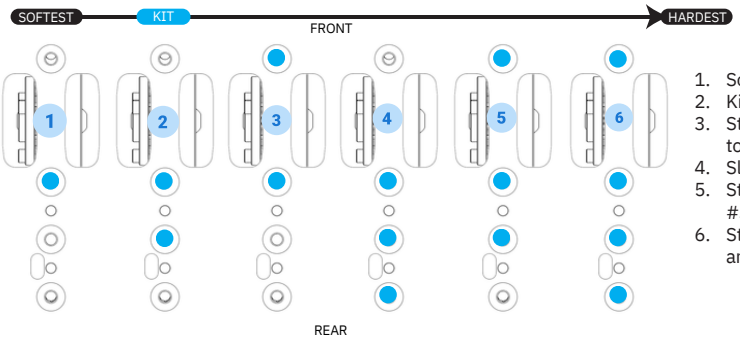

1. Softest setting, overall less rear traction and more rotation than #2 (kit setting)
2. Kit setting, overall good stability and steering, generally the best starting point
3. Stiffer than kit, but notably flex point moved rearward. Generally more unstable and edgy to drive compared to #2. Better suited for higher traction and/or tight tracks
4. Slightly stiffer than #3, but more stable and predictable due to shifting flex point forwards
5. Stiffer than #4, and flex point is moved rearward again. Similar driving characteristics to #3 but overall stiffer, generally more suited to higher traction conditions
6. Stiffest setting, generally suitable for high grip surfaces to make the car more consistent and easier to drive

STEP 6.9

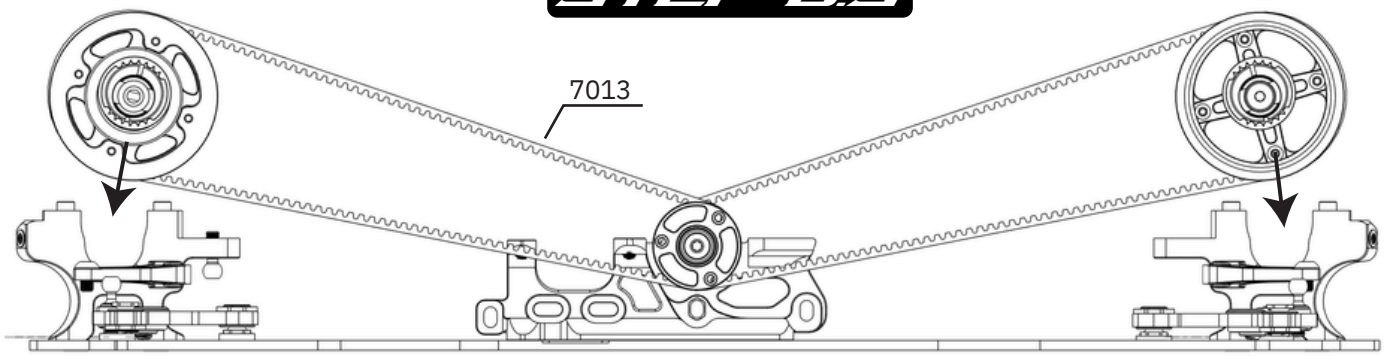

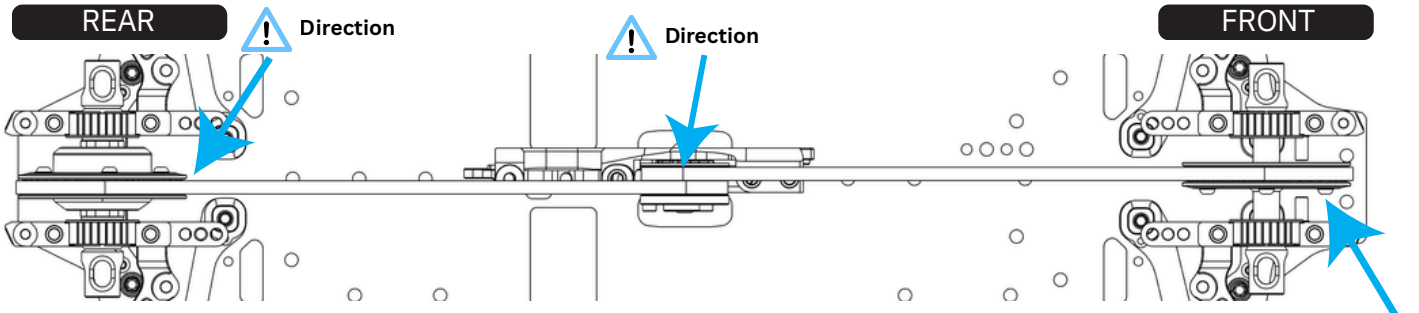

1. Locate 7013 belts onto centre pulley in correct direction
2. Locate Spool Pulley onto front belt in correct direction and insert into bulkheads. Align eccentric centrally with the spool in the **low** position.
3. Locate Diff Pulley onto rear belt in correct direction and insert into bulkheads. Align eccentric centrally with the diff in the low position.
4. Refer to diagrams for correct orientations



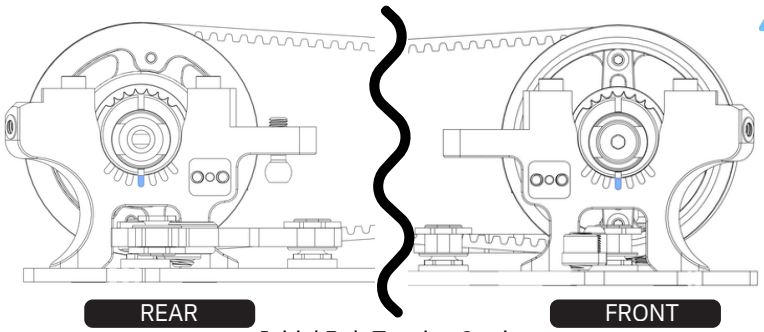

Initial Belt Tension Setting

STEP 6 - CHASSIS BASE

DIFF/SPOOL HEIGHT

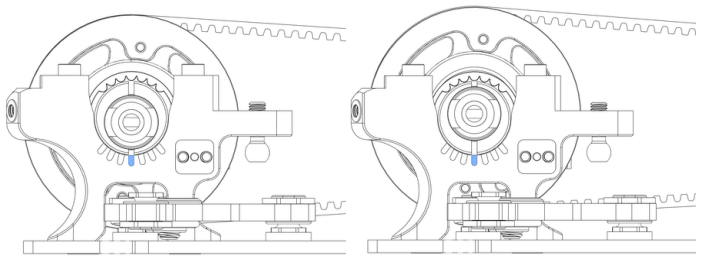

Low Diff/Spool **(Kit Setting)**

High Diff/Spool

BELT TENSION

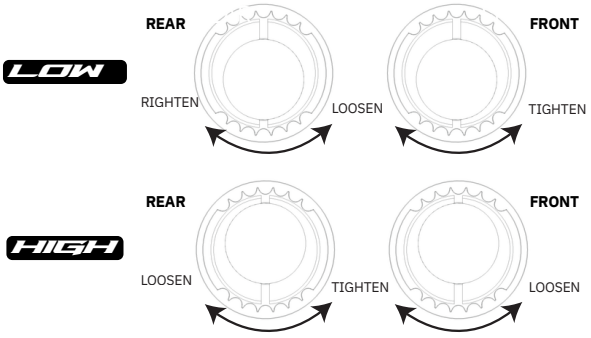

STEP 6.10

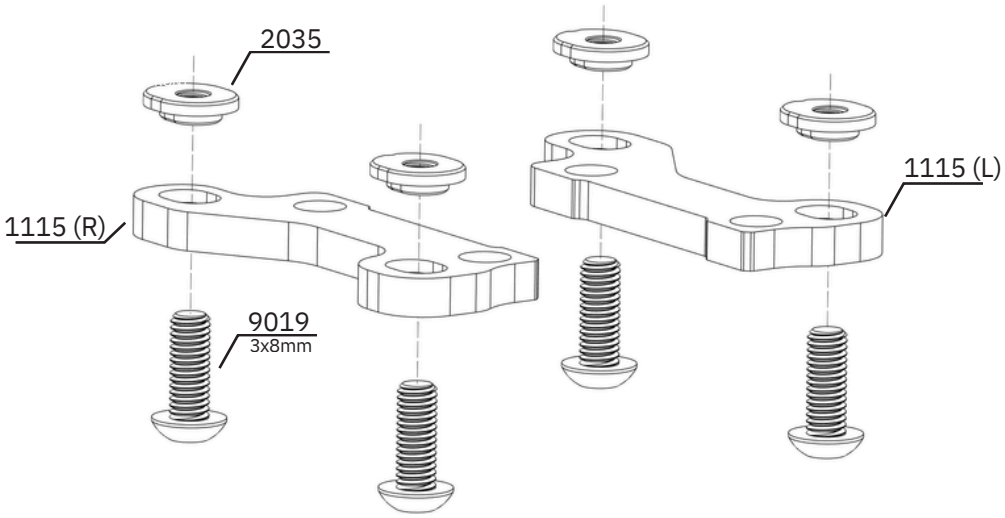

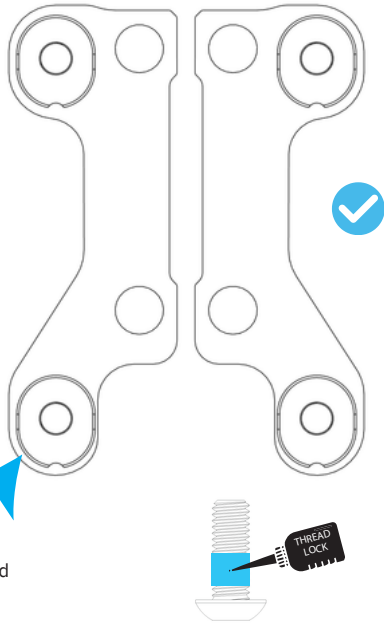

1. Press 2035 into 1115 Left and Right in **correct orientation for 4 degrees caster**
2. Apply a small amount of thread lock to the base of 9019 (3x8mm) screws as illustrated
3. Use 9019 (3x8mm) screws from underneath to tighten 2035 down into carbon
4. Make a left and right mirrored pair as illustrated

OPTION



2036 - Upper Bulkhead Inserts - 2 Dot

STEP 6.11

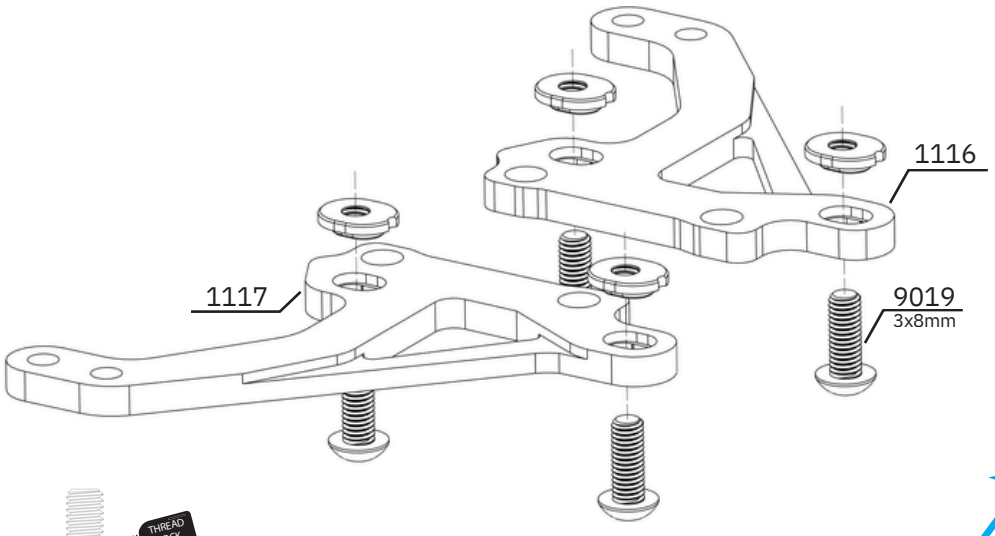

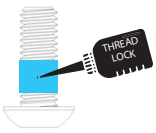

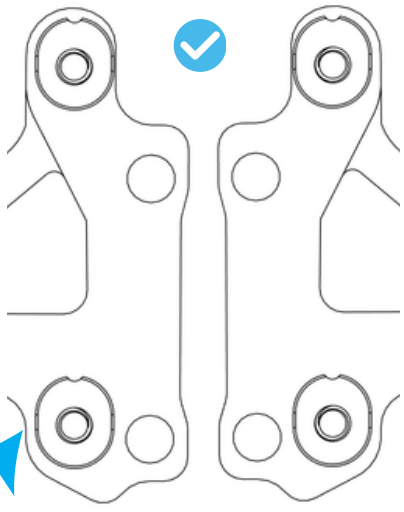

1. Press 2035 into 1116 & 1117 in **correct orientation for -2.5 degrees caster**
2. Apply a small amount of thread lock to the base of 9019 (3x8mm) screws as illustrated
3. Use 9019 (3x8mm) screws from underneath to tighten 2035 down into carbon
4. Make a left and right mirrored pair as illustrated

STEP 6 - CHASSIS BASE

CASTER ADJUSTMENT

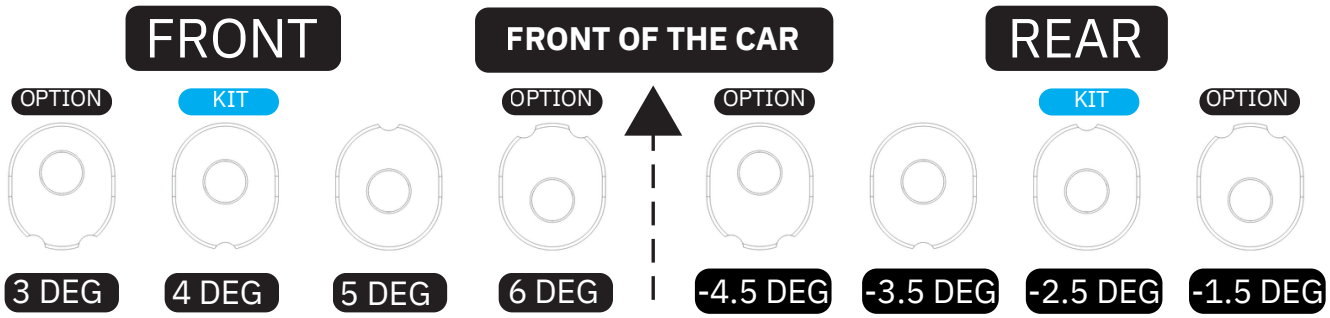

STEP 6.12

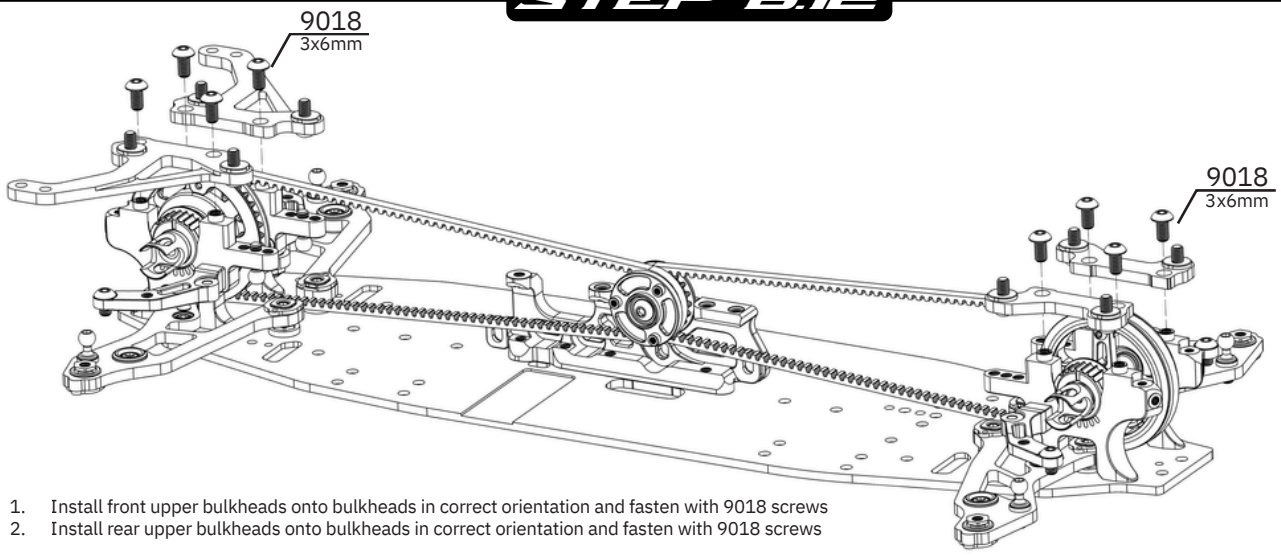

1. Install front upper bulkheads onto bulkheads in correct orientation and fasten with 9018 screws
2. Install rear upper bulkheads onto bulkheads in correct orientation and fasten with 9018 screws

STEP 6.13

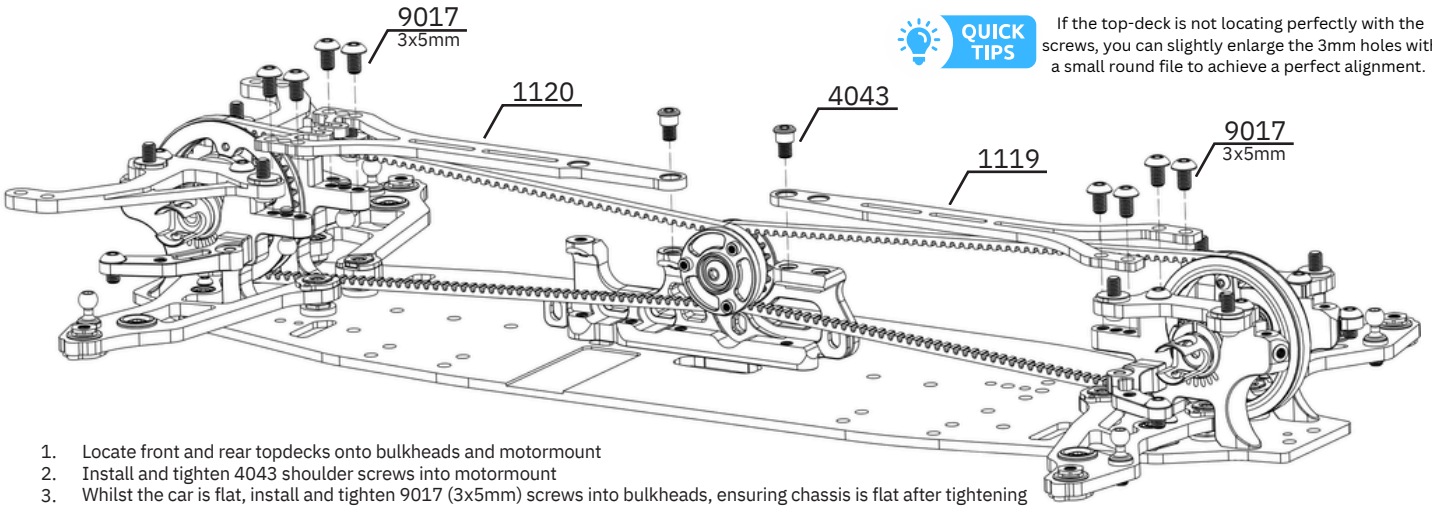

QUICK TIPS If the top-deck is not locating perfectly with the screws, you can slightly enlarge the 3mm holes with a small round file to achieve a perfect alignment.

1. Locate front and rear topdecks onto bulkheads and motormount
2. Install and tighten 4043 shoulder screws into motormount
3. Whilst the car is flat, install and tighten 9017 (3x5mm) screws into bulkheads, ensuring chassis is flat after tightening

TOPDECK FLEX OPTIONS

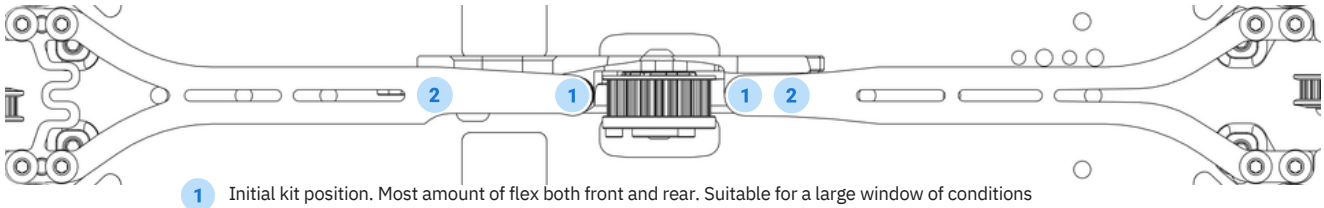

1 Initial kit position. Most amount of flex both front and rear. Suitable for a large window of conditions

2 Adding screw 2 front and rear will stiffen the car overall, making it more responsive and locked in on the rear. Adding only the front screw will increase the cars response, but provide overall less steering from the front of the car. Adding only the rear screw will increase the cars stability and drive traction off the corner, but reduce rotation in slow and tight corners

2 **REAR NOTE:** There is an intentional 0.5mm gap below the topdeck on the rear hole 2. This is to allow more flex, since position 2 is so far back from position 1. If you would like to fix this in place just like position 1, you can add a 4x6x0.5mm shim to take up the gap between the topdeck and motormount for increased stiffness

STEP 6 - CHASSIS BASE

STEP 6.14

OPTION



5010 - Front Weight Set

OPTION



5011 - Rear Weight Set

CARBON & ALU CHASSIS ONLY!

These centre weights are only included in the Carbon & Aluminium Kits. They are not required with the steel chassis due to the weight of the steel chassis

OPTION



1055 - Carbon rear centre stiffener brace

OPTION



1056 - Carbon front centre stiffener brace

5026 & 5027 are located in the separate unlabelled bumper bag

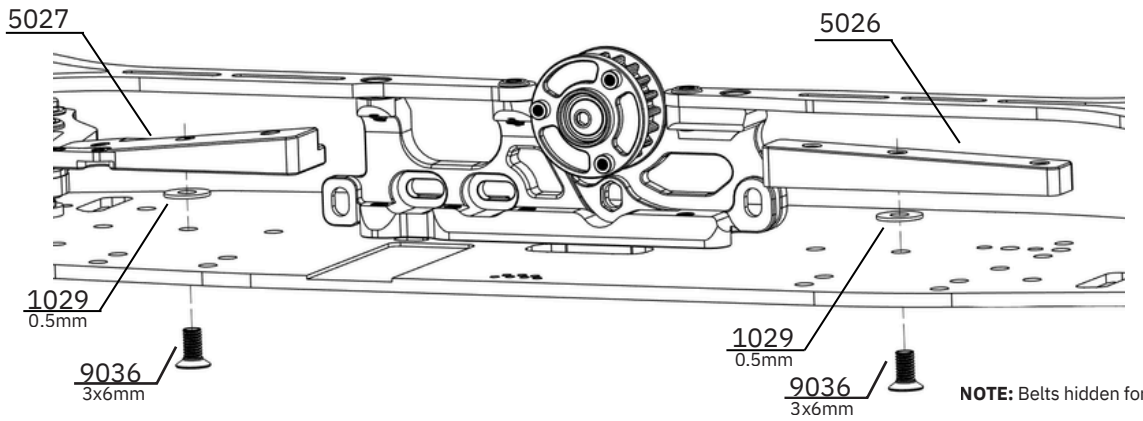

NOTE: Belts hidden for illustration purposes

1. Install 5027 and 5026 centre weights to the chassis with 1029 shim in between
2. Use 9036 (3x6mm) screws from underneath into the centre hole on the weights to fix them to the chassis.
   Note: The initial setting is with 1029 (0.5mm) carbon shim for increased flex, removing 1029 (0.5mm) carbon shim and/or adding additional screws reduces flex on the chassis substantially.

CENTRE WEIGHT FLEX OPTIONS

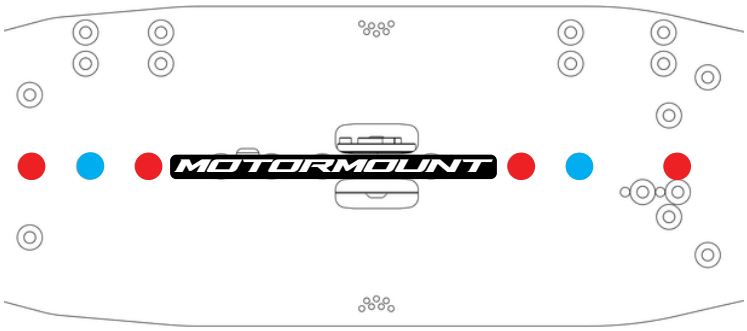

- Flex screws can be added either side of kit positions
- Remove shims when using more than 1 screw
- Adding screws removes flex at that end of the car

Kit Position
Optional Position

STEP 6.15

REAR

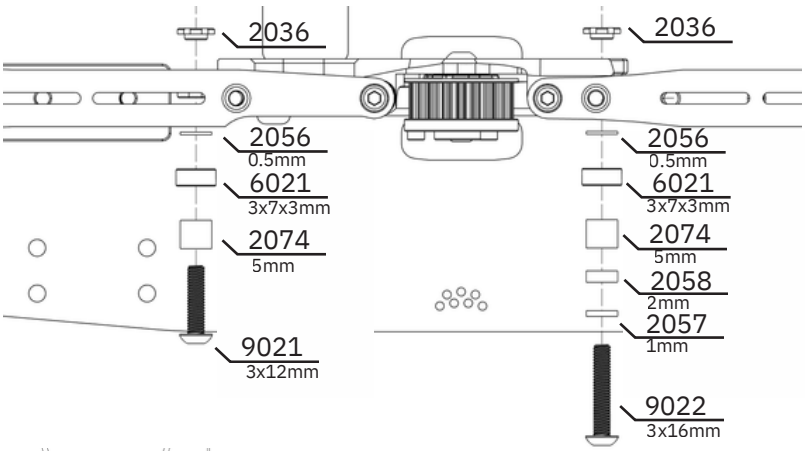

FRONT

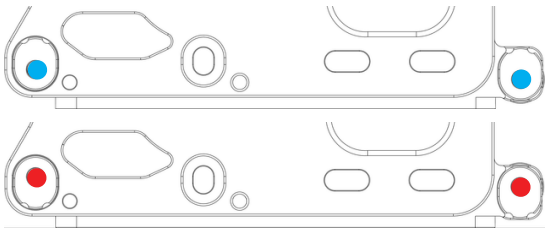

1. Install belt tensioners/battery stoppers into motormount as depicted, noting the different length screws for front and rear
2. 2036 can be orientated differently to adjust belt tension. We suggest the following starting points indicated below:

Low/loose position (25.5-13.5 Blinky)
High/tight position (13.5 Boost - Modified)

STEP 7 - TURNBUCKLES & UPPER ARMS

BAG F

PARTS LIST

SKU	Description	QTY
2024	Steering Turnbuckle	2
2057	3x5.5x1mm Shim	12
2115-1	Rear Right Rocker	1
2115-2	Rear Left Rocker	1
2116-1	Front Left Rocker	1
2116-2	Front Right Rocker	1
2138	Servo Turnbuckle	1
2140	Rear Toe Turnbuckle	2
3012	4.3mm Closed Ball Cup	10
3017	FL/RR Upper Arm	2
3018	FR/RL Upper Arm	2
3020	Front Upper Arm Ball Cup	2
3021	Rear Upper Arm Ball Cup	2
3119	4.3mm Lower Push Rod Ball Cup	4
4033A	M4 Upper Arm Adjuster Screw LW	4
4048	M1.2mm e-Clip	4
4110	Upper Rocker Mouting Shaft	4
4111	Upper Rocker Mounting Pin	4
4112	Centre Rocker Mounting Screw	4
4114	Front Pushrod (Short)	2
4115	Rear Pushrod (Long)	2
4118	4.8mm Female Polished Ball Stud	8
6018	3x6x2.5mm Bearing	8
9016	M2.5x14mm Button Head Screw	2
9040	M2x4mm Button Head Screw	4

STEP 7.1

STEERING

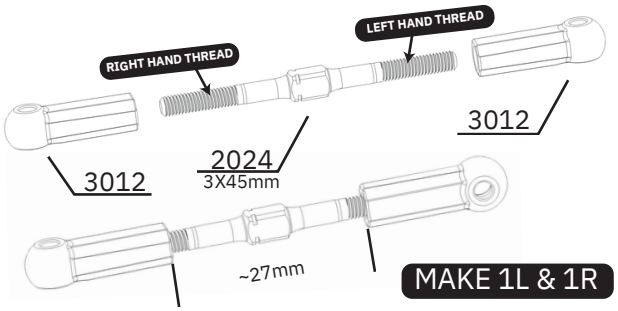

1. Thread 3012 Ball Cups onto 2024 turnbuckle
2. Hold the turnbuckle with a 4mm turnbuckle wrench
3. Tighten each side equally until a gap of roughly 27mm
4. Ensure one ball cup is at 90 degrees to the other
5. Make mirrored copies, one left and one right

QUICK TIPS

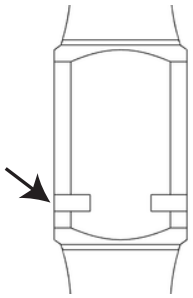

The offset line on the centre of the turnbuckle indicates the direction of the thread. The side which the line is closest to, indicates a right hand thread, whilst the side that is further away from the line is the left hand thread.

STEP 7.2

REAR TOE

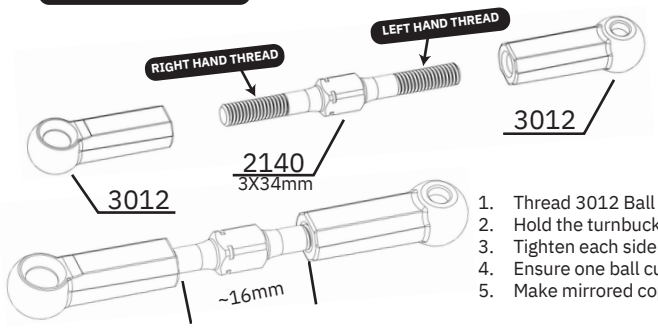

MAKE 1L & 1R

1. Thread 3012 Ball Cups onto 2140 turnbuckle
2. Hold the turnbuckle with a 4mm turnbuckle wrench
3. Tighten each side equally until a gap of roughly 16mm
4. Ensure one ball cup is at 180 degrees to the other as illustrated
5. Make mirrored copies, one left and one right

STEP 7.3

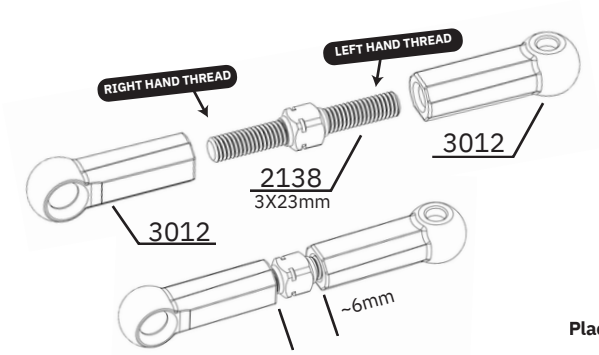

SERVO

1. Thread 3012 Ball Cups onto 2138 turnbuckle
2. Hold the turnbuckle with a 4mm turnbuckle wrench
3. Tighten each side equally until a gap of roughly 6mm
4. Ensure one ball cup is at 90 degrees to the other as illustrated

Place all turnbuckles to the side for future steps.

OPTION



3041 - Soft Upper Arm FR/RL

OPTION



3042 - Soft Upper Arm FL/RR

OPTION PART



10021 - 4.8mm Turnbuckle Upper Arm Set (Bronze Aluminium)

OPTION PART



10022 - 4.8mm Turnbuckle Upper Arm Set (Raw Titanium)

STEP 7 - TURNBUCKLES & UPPER ARMS

STEP 7.4

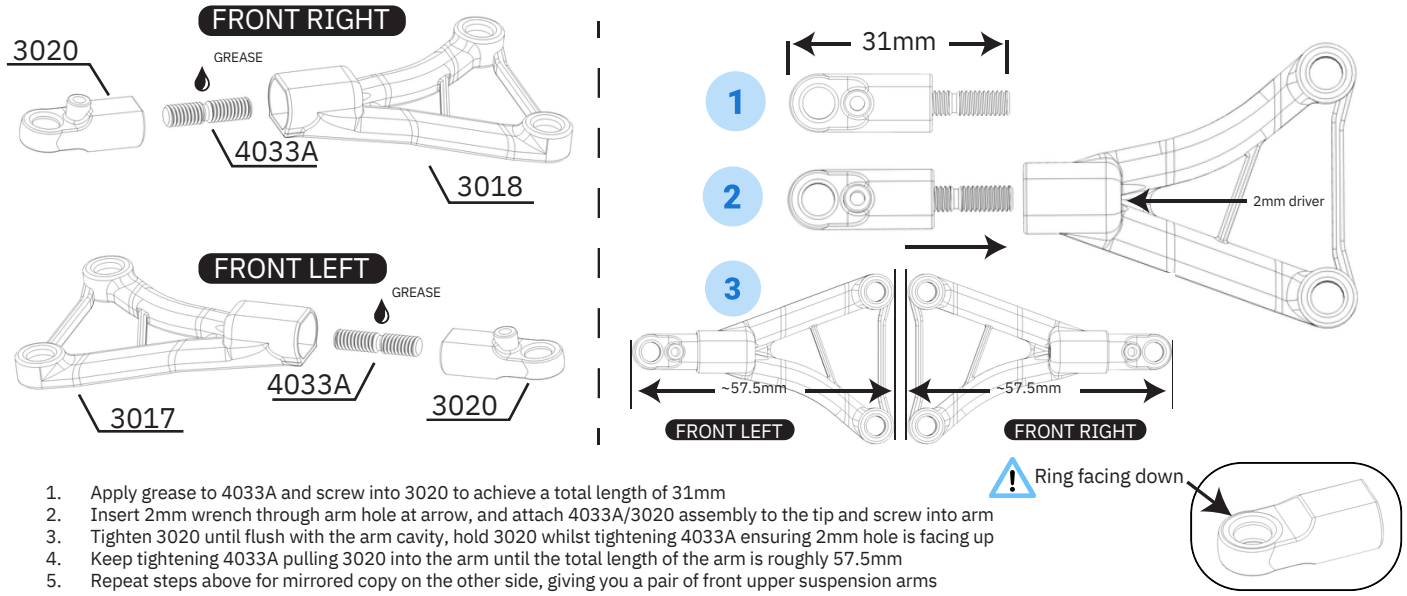

1. Apply grease to 4033A and screw into 3020 to achieve a total length of 31mm
2. Insert 2mm wrench through arm hole at arrow, and attach 4033A/3020 assembly to the tip and screw into arm
3. Tighten 3020 until flush with the arm cavity, hold 3020 whilst tightening 4033A ensuring 2mm hole is facing up
4. Keep tightening 4033A pulling 3020 into the arm until the total length of the arm is roughly 57.5mm
5. Repeat steps above for mirrored copy on the other side, giving you a pair of front upper suspension arms

STEP 7.5

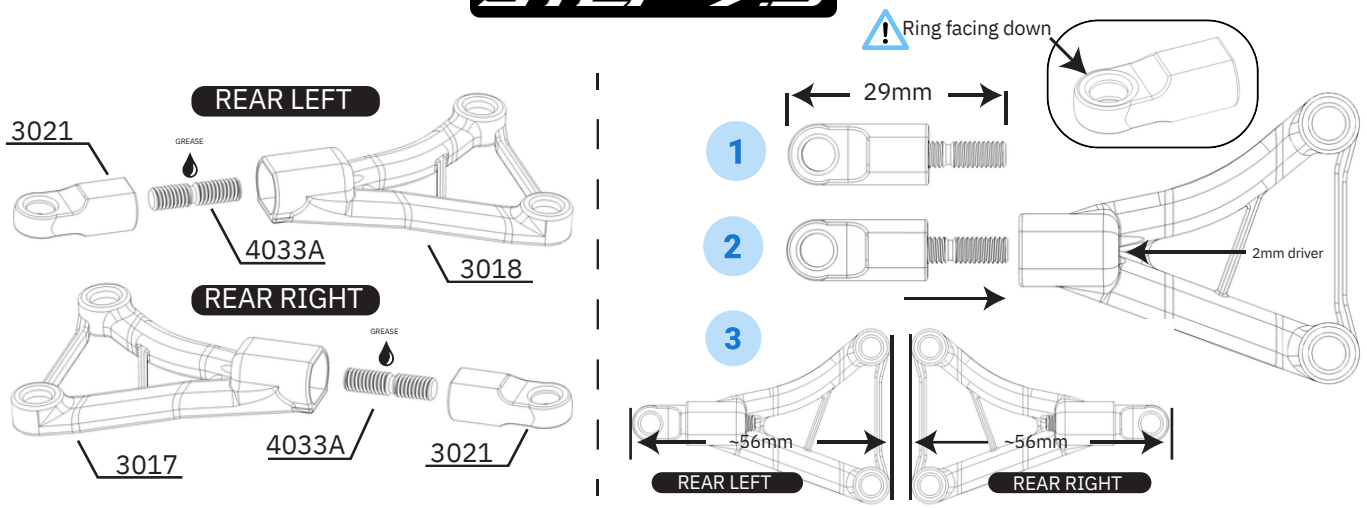

1. Apply grease to 4033A and screw into 3021 to achieve a total length of 29mm
2. Insert 2mm wrench through arm hole at arrow, and attach 4033A/3021 assembly to the tip and screw into arm
3. Tighten 3020 until flush with the arm cavity, hold 3021 whilst tightening 4033A ensuring ball ring is facing down
4. Keep tightening 4033A pulling 3020 into the arm until the total length of the arm is roughly 56mm
5. Repeat steps above for mirrored copy on the other side, giving you a pair of front upper suspension arms

OPTION PART



14202 - Gr.5 Titanium Arm Adjuster Screw Set

STEP 7.6

FRONT & REAR ARMS

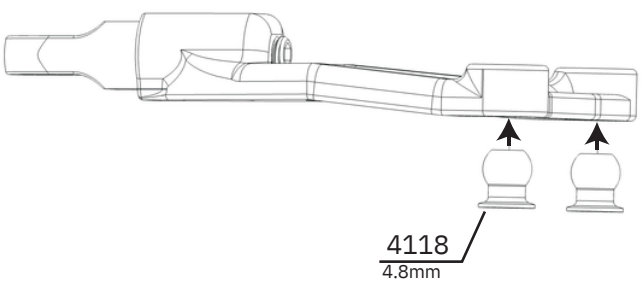

1. Insert 4118 (4.8mm) Ball studs into front and rear arm assemblies from underneath using wide jaw/ball cup pliers

STEP 7.7

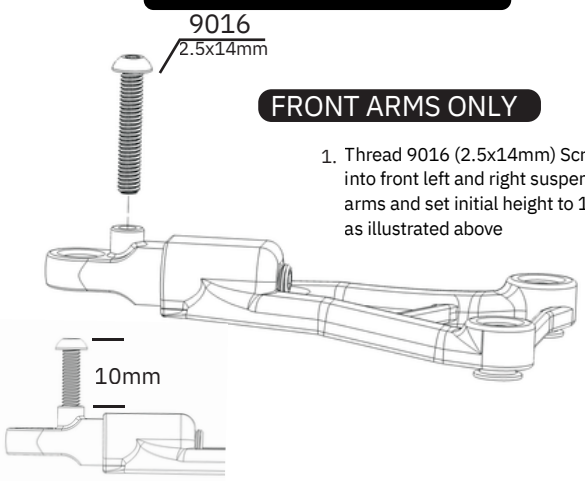

FRONT ARMS ONLY

1. Thread 9016 (2.5x14mm) Screw into front left and right suspension arms and set initial height to 10mm as illustrated above

QUICK TIPS

This screw acts as a stopper to prevent the front tire from hitting the bodyshell during cornering. It can be screwed in or out to adjust the point of engagement.

OPTION TURNBUCKLE ARM

ASSEMBLY INSTRUCTIONS

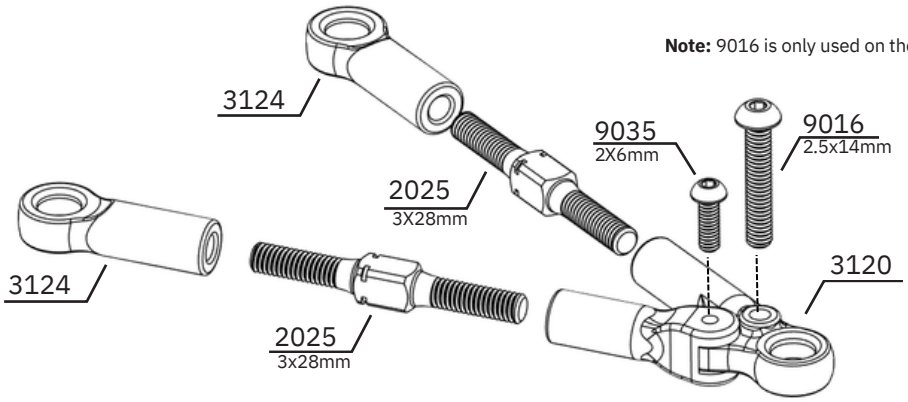

Note: 9016 is only used on the front links.

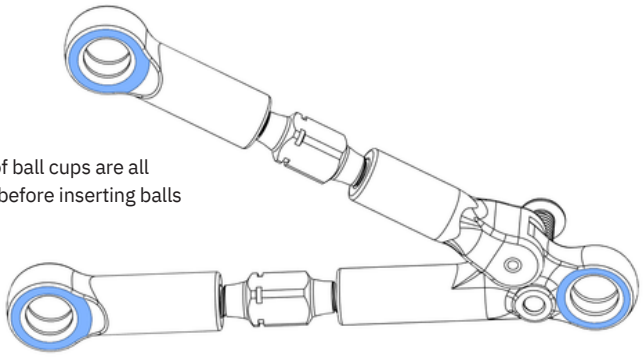

Ensure shiny side of ball cups are all facing downwards before inserting balls

This turnbuckle upper arm assembly is used with the same 4118 (4.8mm Female Ballstuds) as the standard upper arms.

QUICK TIPS

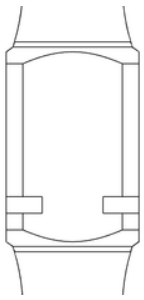

The offset line on the centre of the turnbuckle indicates the direction of the thread. The side which the line is closest to, indicates a right hand thread, whilst the side that is further away from the line is the left hand thread.

FL

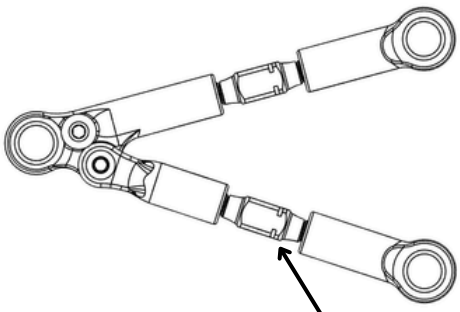

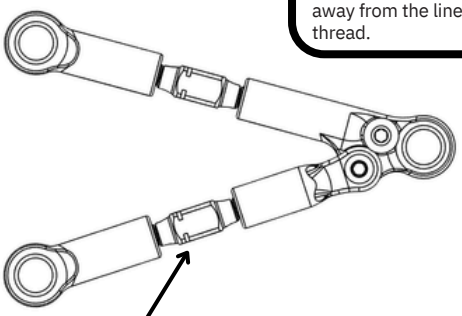

FR

Which direction you face the turnbuckles is up to you, however we suggest making them either all the same direction, or mirrored as illustrated above.

RL

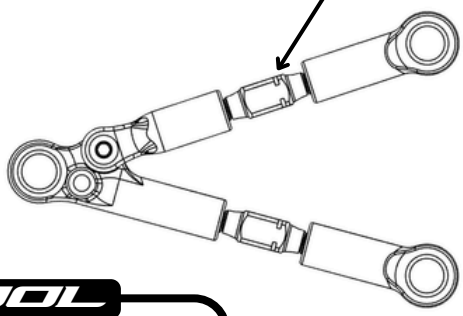

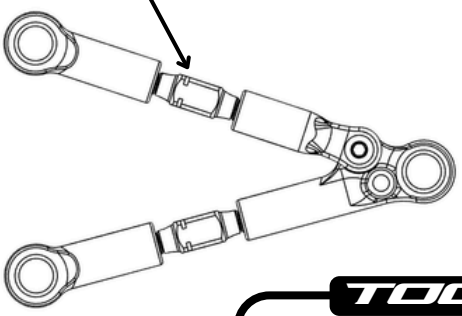

RR

TOOL



IN8-70013 - 3DX Carbon Digital Angle Gauge Plate for RC MAKER SP2

INOV8

You will need a caster gauge when using the adjustable upper links. Analogue and Digital options are available, choose what is most appealing to you! Note, the INOV8 Plate requires the IN8-70003 Digital Gauge for use.

DIGITAL

ANALOGUE

TOOL



2147 - Height Adjustable Analogue Caster Tool

STEP 7 - TURNBUCKLES & UPPER ARMS

STEP 7.8

REAR ARMS

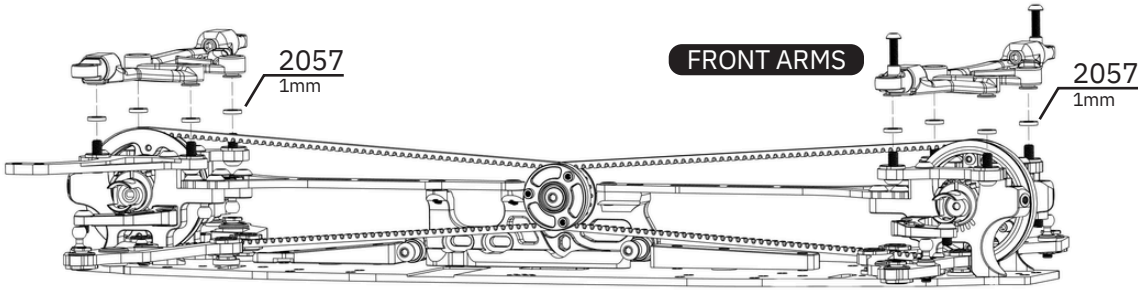

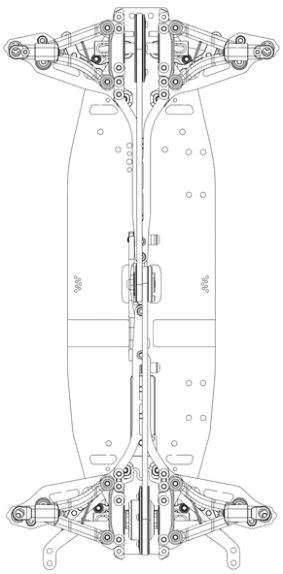

⚠ Curved part of upper arm should be facing the centre of the car front and rear

1. Install 2057 (3x5.5x1mm) shims on to front and rear upper arm screws
2. Using a 2.5mm hex driver, tighten upper arms onto upper bulkheads in correct orientation

STEP 7.9

Use Rear Hubs from Step 4

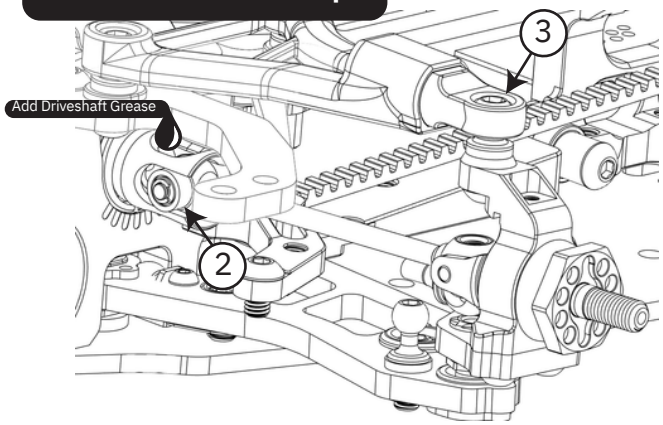

REAR

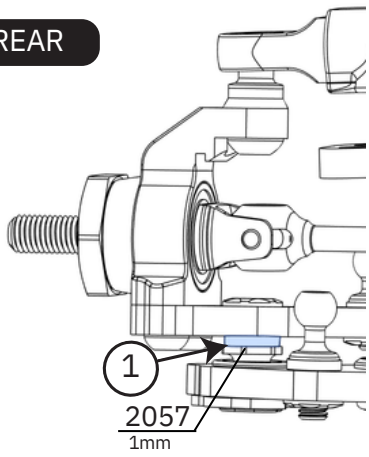

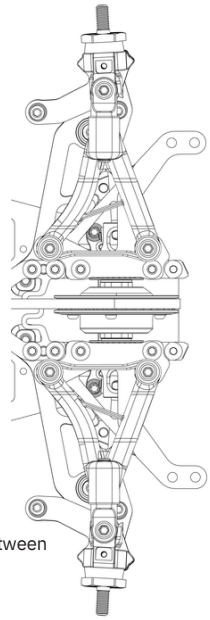

1. Using a 2.5mm hex driver from below, screw the rear hub onto the Rear Suspension Ball with 2057 (3x5.5x1mm) Shim in between
2. Insert inner drive joint into diff outdrive, and add some grease/oil to the joint
3. Firmly press the outside of the upper suspension arm onto the hub ball-stud
4. Ensure suspension is moving up and down freely and all driveshafts are connected to the drivetrain

STEP 7.10

Use Front Hubs from Step 4

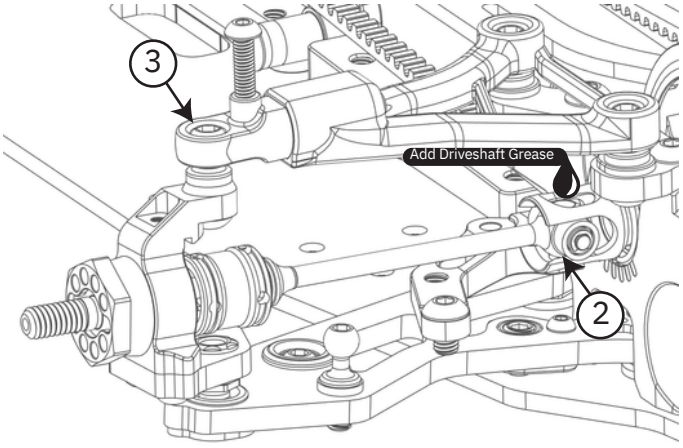

FRONT

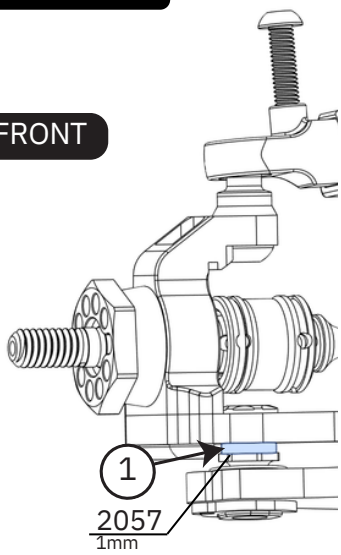

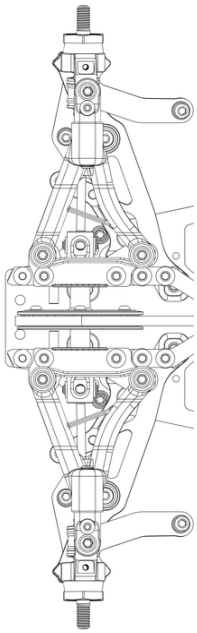

1. Using a 2.5mm hex driver from below, screw the front hub onto the Rear Suspension Ball with 2057 (3x5.5x1mm) Shim in between
2. Insert inner drive joint into spool outdrive, and add some grease/oil to the joint
3. Firmly press the outside of the upper suspension arm onto the hub ball-stud
4. Ensure suspension is moving up and down freely and all driveshafts are connected to the drivetrain

STEP 7 - TURNBUCKLES & UPPER ARMS

STEP 7.11

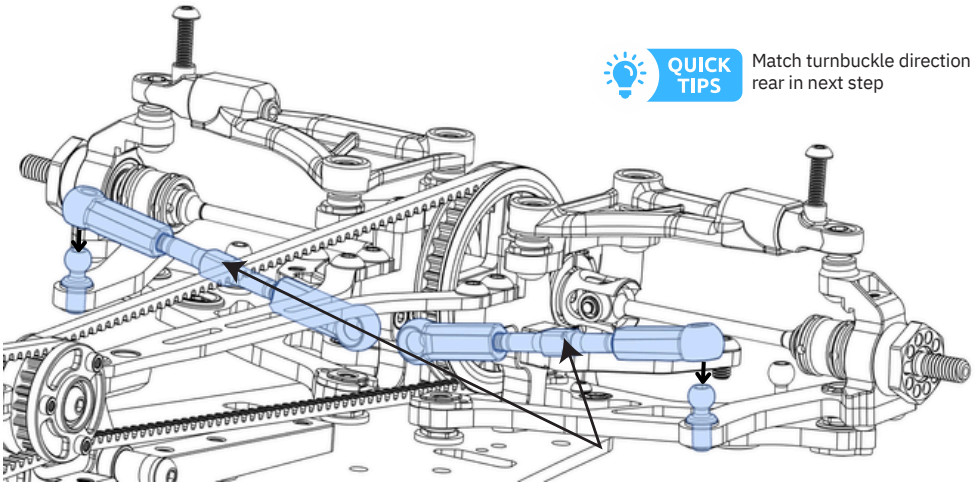

QUICK TIPS Match turnbuckle direction on both sides and to rear in next step

1. Snap previously assembled steering turnbuckles onto ballstuds in above orientation
2. Ensure both front turnbuckles are matching in orientation and also matching to the rear for easy adjustment

STEP 7.12

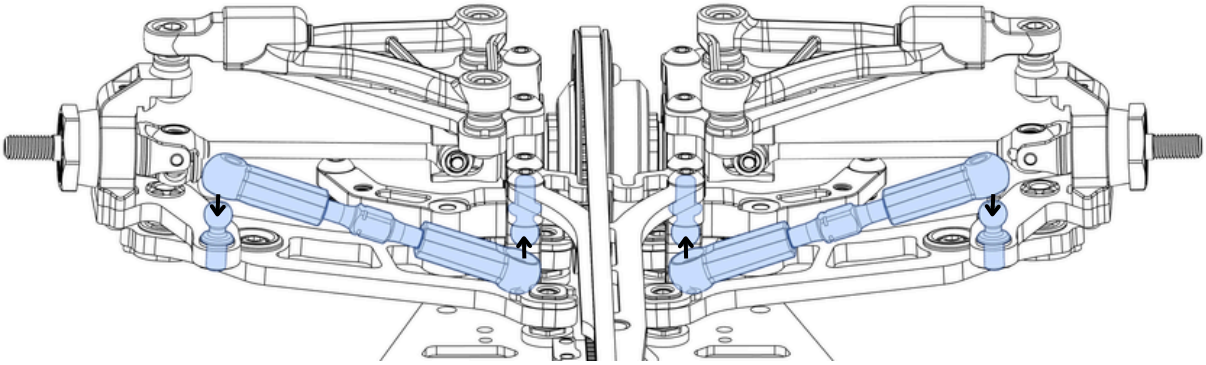

QUICK TIPS Match turnbuckle direction on both sides and to front in previous step

1. Snap previously assembled rear toe turnbuckles onto ballstuds in above orientation
2. Ensure both front turnbuckles are matching in orientation and also matching to the front for easy adjustment

STEP 8 - ROCKERS & STEERING RACK

BAG F

PARTS LIST

SKU	Description	QTY
2024	Steering Turnbuckle	2
2057	3x5.5x1mm Shim	12
2115-1	Rear Right Rocker	1
2115-2	Rear Left Rocker	1
2116-1	Front Left Rocker	1
2116-2	Front Right Rocker	1
2138	Servo Turnbuckle	1
2140	Rear Toe Turnbuckle	2
3012	4.3mm Closed Ball Cup	10
3017	FL/RR Upper Arm	2
3018	FR/RL Upper Arm	2
3020	Front Upper Arm Ball Cup	2
3021	Rear Upper Arm Ball Cup	2
3119	4.3mm Lower Push Rod Ball Cup	4
4033A	M4 Upper Arm Adjuster Screw LW	4
4048	M1.2mm e-Clip	4
4110	Upper Rocker Mouting Shaft	4
4111	Upper Rocker Mounting Pin	4
4112	Centre Rocker Mounting Screw	4
4114	Front Pushrod (Short)	2
4115	Rear Pushrod (Long)	2
4118	4.8mm Female Polished Ball Stud	8
6018	3x6x2.5mm Bearing	8
9016	M2.5x14mm Button Head Screw	2
9040	M2x4mm Button Head Screw	4

STEP 8.1

FRONT

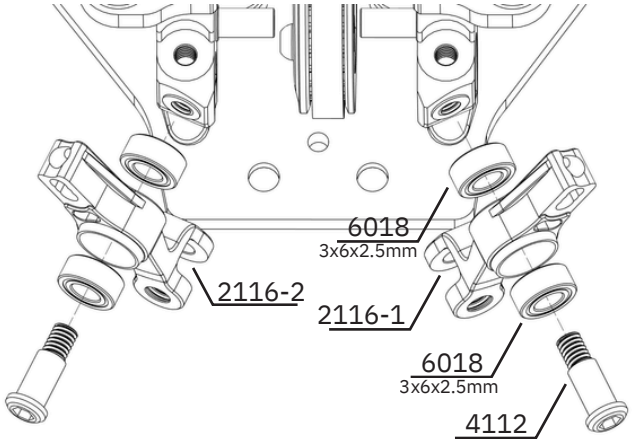

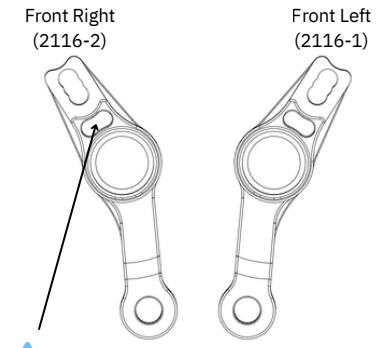

NOTE: Front and rear rockers are different, fronts can be identified as having this hole, where as rears do not!

1. Use 4112 Machined Screw to fix rockers to bulkheads. Tighten with medium strength

STEP 8.2

REAR

6018 3x6x2.5mm Bearings are pre-installed

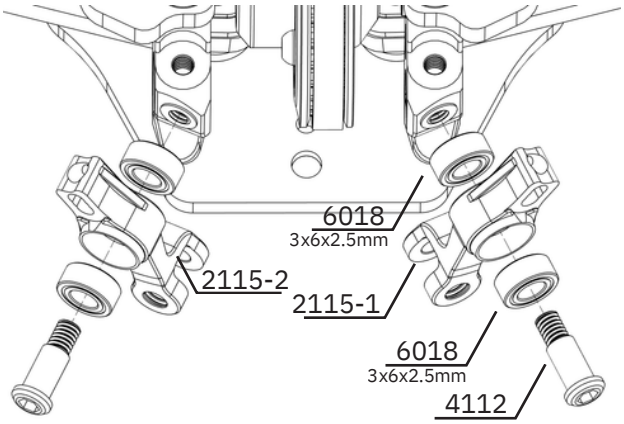

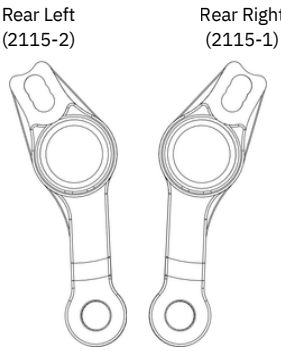

1. Use 4112 Machined Screw to fix rockers to bulkheads. Tighten with medium strength

STEP 8.3

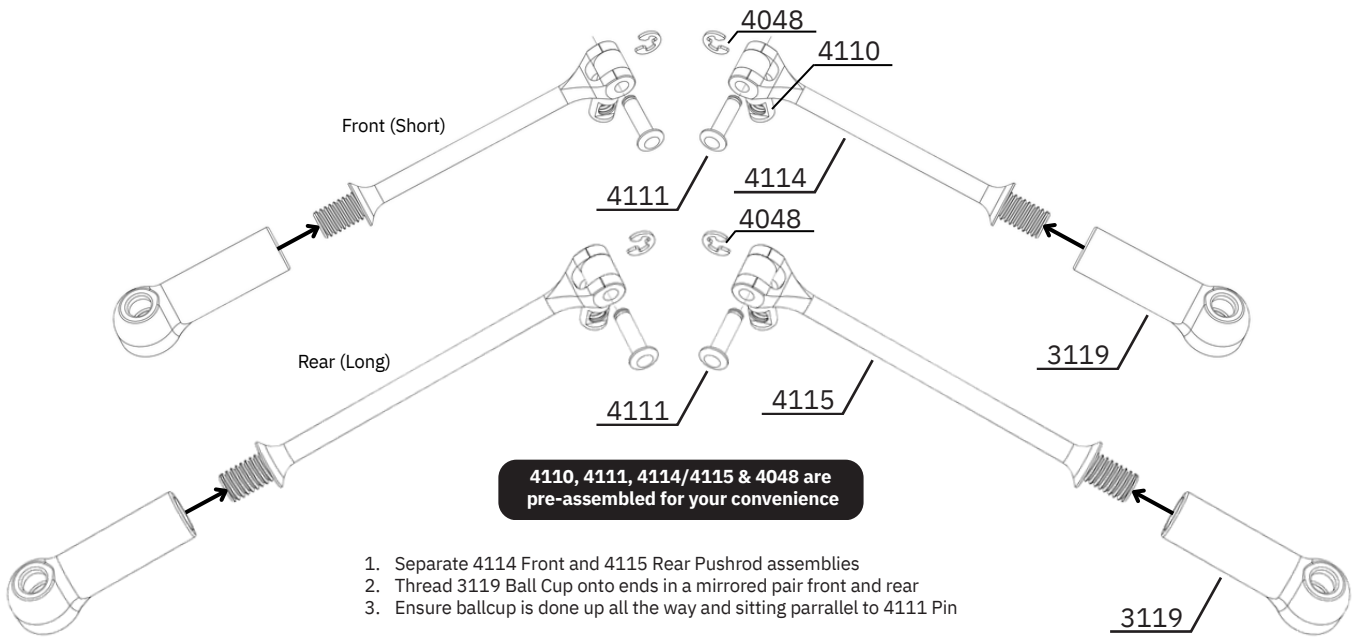

4110, 4111, 4114/4115 & 4048 are pre-assembled for your convenience

1. Separate 4114 Front and 4115 Rear Pushrod assemblies
2. Thread 3119 Ball Cup onto ends in a mirrored pair front and rear
3. Ensure ballcup is done up all the way and sitting parrallel to 4111 Pin

STEP 8 - ROCKERS & STEERING RACK

STEP 8.4

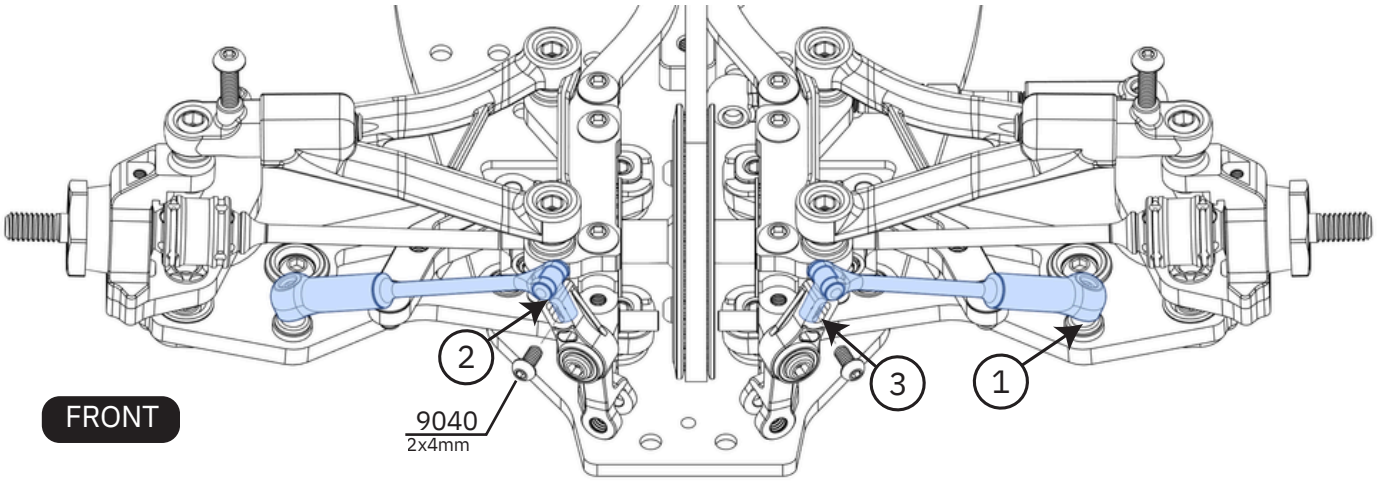

1. Pop 3119 ball cup onto 4121 ball stud on suspension arm, ensuring correct orientation (e-clip to the centre of the car)
2. Insert Front Pushrod Shaft into rockers
3. Insert 9040 (2x4mm) Screw into lowest hole on rocker, and tighten pushrod shaft into place. Do not over-tighten, just use light to medium force
4. Ensure arm and rocker move freely

STEP 8.5

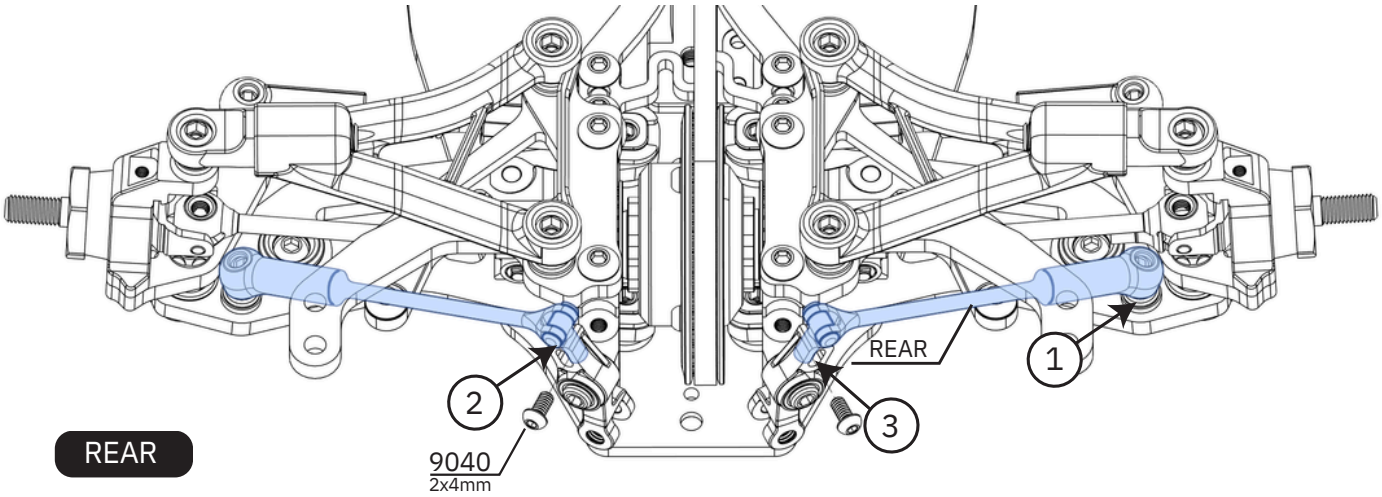

1. Pop 3119 ball cup onto 4121 ball stud on suspension arm, ensuring correct orientation (e-clip to the centre of the car)
2. Insert Front Pushrods shaft into rockers
3. Insert 9040 (2x4mm) Screw into lowest hole on rocker, and tighten pushrod shaft into place
4. Ensure arm and rocker move freely

ROCKER ADJUSTMENT GUIDE

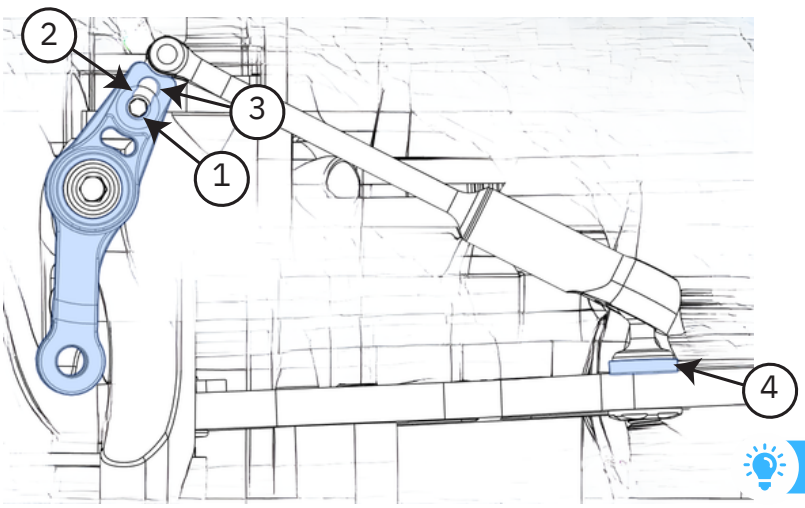

The SP2 Rocker and Pushrod system features some unique adjustability. Firstly the adjustability on the rocker, which adjusts the amount of leverage the wheel has over the shock absorber, thus effecting the overall stiffness (oil and spring together) of the suspension. We also have an adjustment on the lower arm which adjusts the overall progression of the suspension.

1. **Lowest** Rocker hole, **stiffest** setting **(kit setting)**
2. **Middle** Rocker hole, **medium** setting
3. **Highest** Rocker hole, **softest** setting
4. **More** shims under the ball stud **removes progression**
   Less shims under the ball stud **adds progression**

We suggest not to play too much with (4), as it has significant effects on other parts of the geometry, such as piston position in the shock body unless the link is adjusted accordingly.
As a general rule of thumb, the link must be **lengthened 0.5mm for every 1mm removed**, or **shortened 0.5mm for every 1mm added** (from the kit setting of 1mm).

QUICK TIPS

With some more extreme setup combinations on the rear of the car (ie. Low axle height + low roll centre), it may not be possible to achieve a low enough ride height. This is due to the shift in suspension kinematics. If this happens, you can easily trim 0.5-1mm off the end of 3119 on the rear, which will lower the car and make lower ride heights achieveable.

STEP 8 - ROCKERS & STEERING RACK

BAG G PARTS LIST

SKU	Description	QTY
2020A	Steering Rack Arm	2
2021B	Steering Rack Post	2
2056	3x5.5x0.5mm Shim	2
2057	3x5.5x1.0mm Shim	1
2118	Floating Servo Mount	1
2126	Anti-Roll Bar Holder Ball Raced FL/RR	2
2127	Anti-Roll Bar Holder Ball Raced FR/RL	2
2128	Anti-Roll Bar Collar FL/RR	4
2133	Steering Rack (Bearings Fitted)	1
4120	4.3mmx4.6mm Male Polished Ball Stud	3
4121	4.3x6.0mm Male Polished Ball Stud (+1.0mm)	1
4125	Anti-Roll Bar (1.1mm)	2
4129	Anti Roll Bar Adapter Shaft 1.0/1.1	4
6013	5x8x2.5mm Bearing	4
6018	3x6x2.5mm Bearing	6
9017	M3 x 5mm Button Head Screw	4
9018	M3 x 6mm Button Head Screw	4
9027	M3 x 3mm Grub Screw	4
9032	M3x5mm 110deg Flat Head Screw	2
9036	M3x6mm 110deg Flat Head Screw	2
9037	M2x4mm Flat Head Screw	4

OPTION

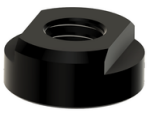

2135 - 6.0mm Steering Limiter

OPTION

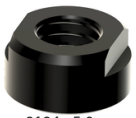

2134 - 5.0mm Steering Limiter

STEP 8.6

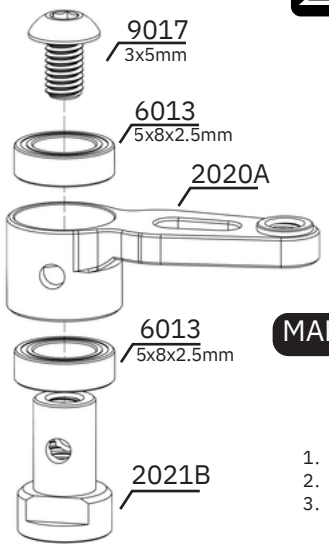

MAKE 2

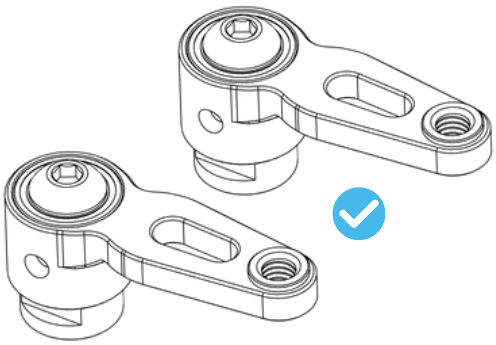

1. Press fit 6013 (5x8x2.5mm) bearings inside 2020A firmly
2. Slide assembly onto 2021B and install 9017 (3x5mm) screw
3. Hold 2021B with a 5.5mm wrench while tightening 9017 (3x5mm) screw firmly

STEP 8.7

6018 3x6x2.5mm Bearings are pre-installed

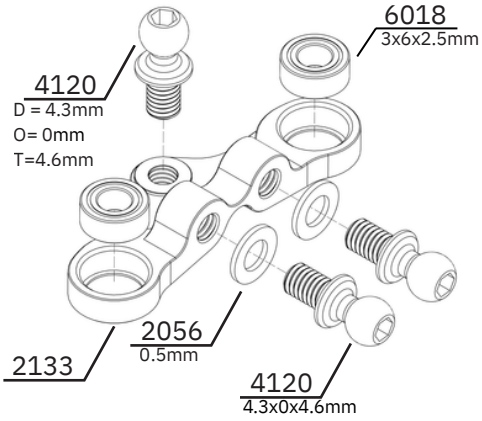

QUICK TIPS

These 2056 shims can be adjusted to adjust steering ackerman. More shims = less ackerman, less shims = more ackerman

1. Tighten 4120 (4.3mm) ball studs into all 3 M3 holes on 2133 Steering Rack
2. Ensure 2056 (3x5.5x0.5mm) shims are underneath the 2 Front 4120 balls

STEP 8.8

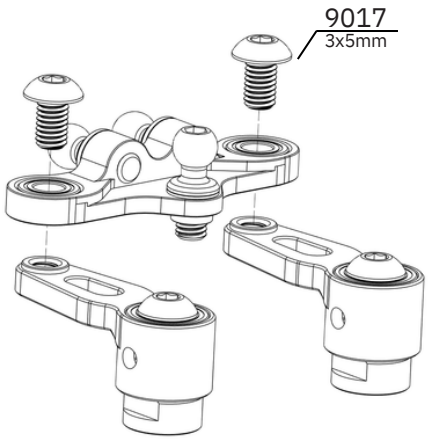

1. Install steering rack onto steering arms from Step 8.6 with 9017 (3x5mm) screws tightened firmly

STEP 8.9

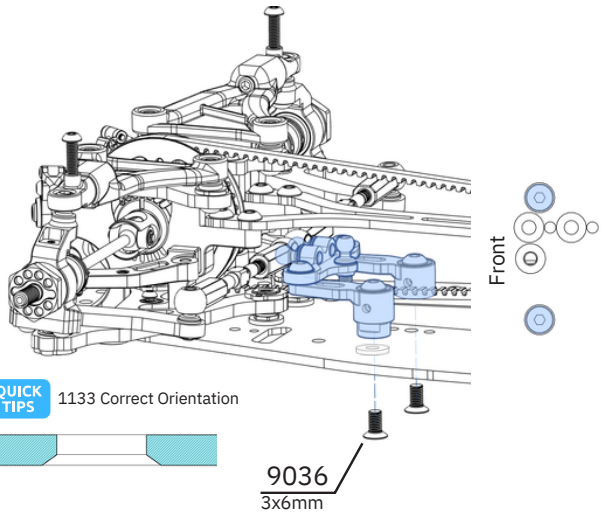

QUICK TIPS 1133 Correct Orientation

1. Install steering rack assembly to chassis with 9036 (3x6mm) screws with 1133 carbon washer underneath (chamfer facing downwards) - Refer to diagram above
2. Use a 5.5mm spanner to hold posts while tightening
   Pop inner ball cups of steering links on to steering rack ball studs

STEERING LOCK GUIDE

The steering rack on the SP2 features a built in steering stopper which allows roughly 27 degrees of inside and 17 degrees of outside lock. We also have 2 optional steering stoppers which are 5.0mm and 6.0mm.

These are installed from underneath the steering rack, and thread onto the excess ballstud thread as illustrated below. They are tightened in place with a 4mm turnbuckle wrench.

More steering lock is desireable on tighter and lower traction tracks, while less steering lock is suggested for larger or higher traction tracks. Generally, you don't want to use more steering lock than you need, as this increase tire wear and reduces corner speed.

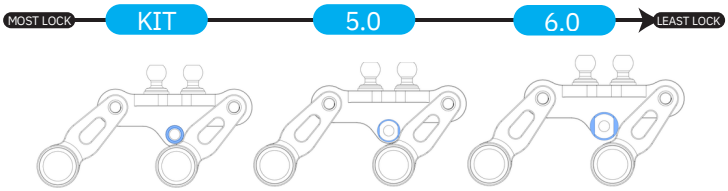

STEP 9 - ANTI-ROLL BARS & SERVO MOUNT

BAG G

PARTS LIST

SKU	Description	QTY
2020A	Steering Rack Arm	2
2021B	Steering Rack Post	2
2056	3x5.5x0.5mm Shim	2
2057	3x5.5x1.0mm Shim	1
2118	Floating Servo Mount	1
2126	Anti-Roll Bar Holder Ball Raced FL/RR	2
2127	Anti-Roll Bar Holder Ball Raced FR/RL	2
2128	Anti-Roll Bar Collar FL/RR	4
2133	Steering Rack (Bearings Fitted)	1
4120	4.3mmx4.6mm Male Polished Ball Stud	3
4121	4.3x6.0mm Male Polished Ball Stud (+1.0mm)	1
4125	Anti-Roll Bar (1.1mm)	2
4129	Anti Roll Bar Adapter Shaft 1.0/1.1	4
6013	5x8x2.5mm Bearing	4
6018	3x6x2.5mm Bearing	6
9017	M3 x 5mm Button Head Screw	4
9018	M3 x 6mm Button Head Screw	4
9027	M3 x 3mm Grub Screw	4
9032	M3x5mm 110deg Flat Head Screw	2
9036	M3x6mm 110deg Flat Head Screw	2
9037	M2x4mm Flat Head Screw	4

OPTION

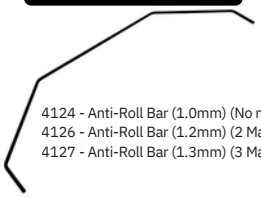

4124 - Anti-Roll Bar (1.0mm) (No markings)
4126 - Anti-Roll Bar (1.2mm) (2 Markings)
4127 - Anti-Roll Bar (1.3mm) (3 Markings)

OPTION



4130 - Anti-Roll Bar Adapter for 1.2/1.3mm

STEP 9.1

FRONT

REAR

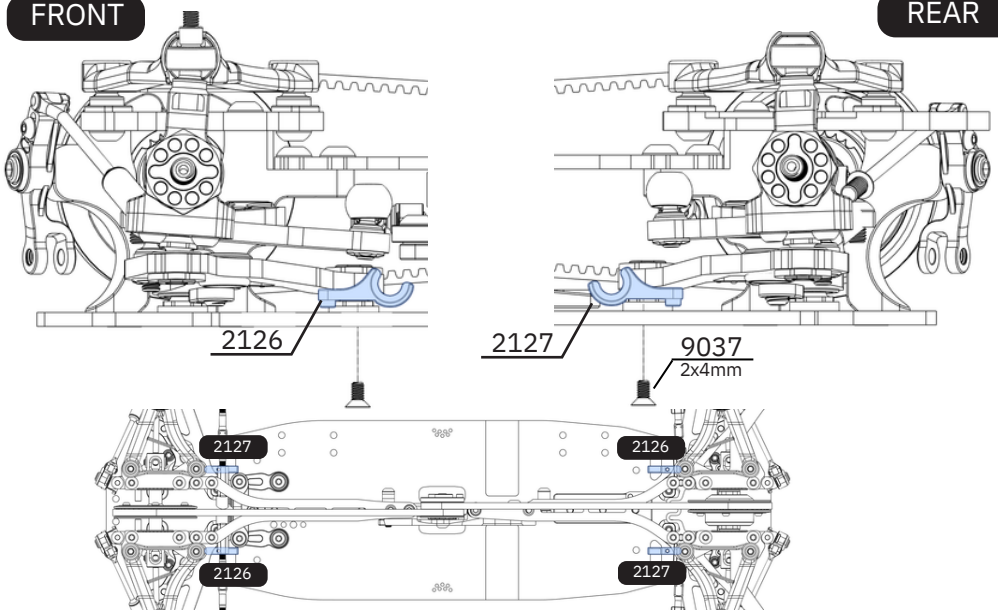

1. Attach 2126 to Front Left and Rear Right of the chassis with 9037 (2x4mm) Screws
2. Attach 2127 to Front Right and Rear Left of the chassis with 9037 (2x4mm) Screws

STEP 9.2

MAKE 2

QUICK TIPS

Ensure Sway Bar is flat by placing it on glass. Make slight bending adjustments if necessary to make the sway bar perfectly flat before installation

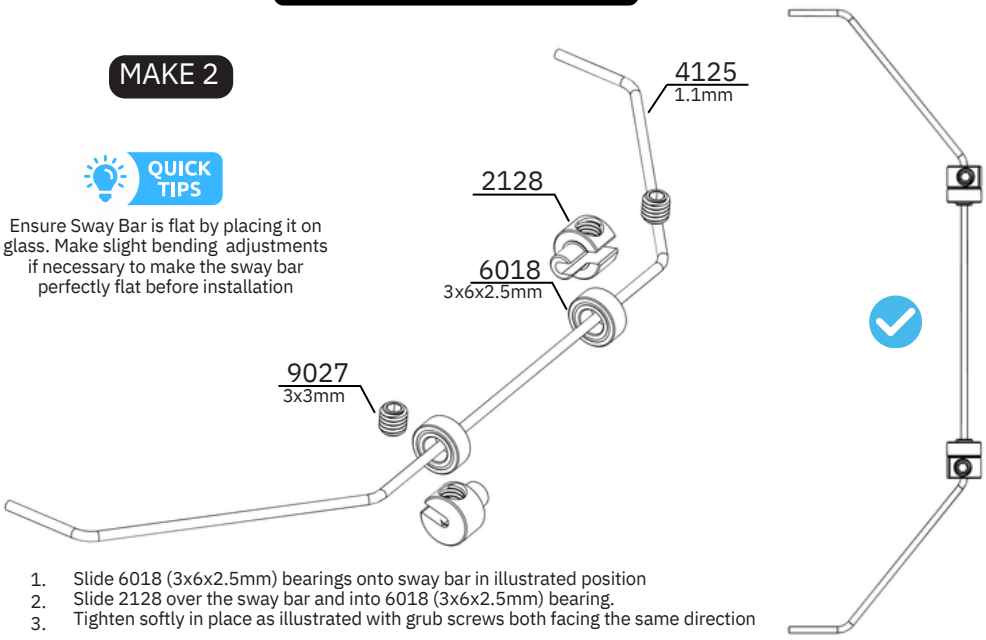

1. Slide 6018 (3x6x2.5mm) bearings onto sway bar in illustrated position
2. Slide 2128 over the sway bar and into 6018 (3x6x2.5mm) bearing.
3. Tighten softly in place as illustrated with grub screws both facing the same direction

STEP 9.3

1

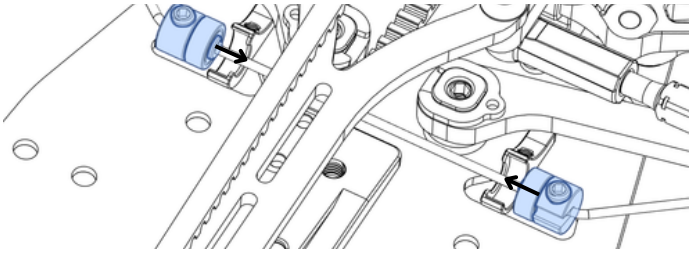

2

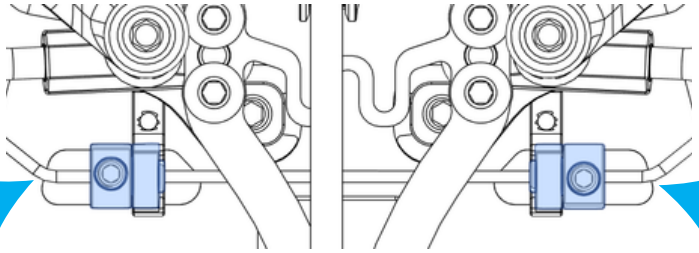

1. Locate sway bar in between sway bar holders
2. Loosen M3 grub screws and slide collars and bearing into sway bar holder
3. Centre the sway bar and once in the middle, tighten M3 grub screws.
4. Ensure sway bar is moving freely with minimal side play

QUICK TIPS

To centre the sway bar, check how the ends of the bar align with the ball on the arm

STEP 9 - ANTI-ROLL BARS & SERVO MOUNT

STEP 9.4



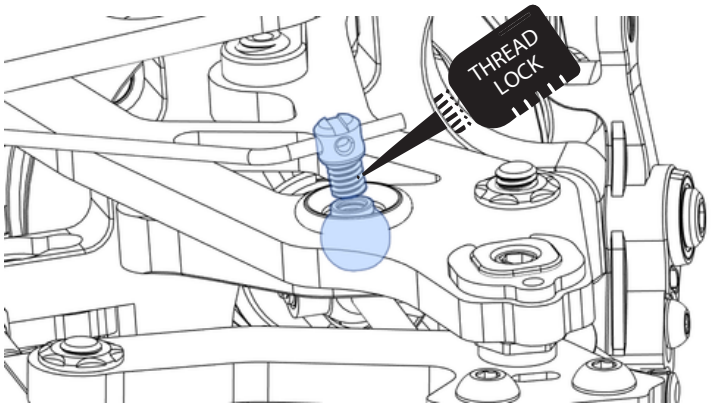

1. Apply medium strength thread lock to thread of 4129
2. Slide 4129 onto sway bar with the head of 4129 facing perpendicular to sway bar as above
3. Insert a 2mm Hex driver into the head of the ball in the arm, and thread 4129 into the ball
4. Tighten 4129 lightly and ensure the thread lock is set before driving
4. Repeat above steps for all 4 corners of the car

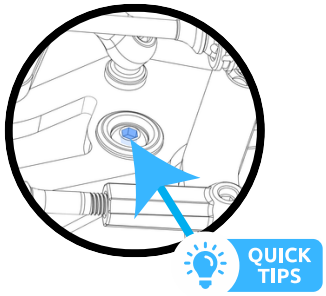

Screwing and unscrewing this adjusts your sway bar tweak. Be sure that this thread is always tight, otherwise it is very easy to lose the sway bar adapter. The initial position is done up all the way, and then tweak as required from there. If you aren't able to get the tweak correct within the range of this thread, your sway bar is likely bent. Take it out, tweak on glass until perfectly flat, and re-install.

ANTI ROLL BAR ADJUSTMENT

1 It is important to keep the end of the sway bar in contact with the adapter lubricated well. We suggest a sticky joint lube which will reduce the friction and wear in the sway bar system. We reccommend placing one drop of lube here every 10-15 runs

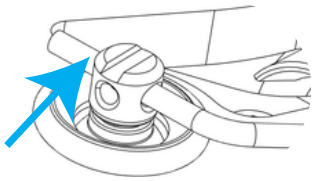

2 We have two different types of adapter shafts. Each have 2 holes for 2 different thicknesses of sway bars. The 2 different types can be identified by the width of the line engraved into the top of them. Each type has 2 holes, and can accept 2 different thickness of sway bars.



The kit one (narrow line) can be used for 1.0 and 1.1mm sway bars.
The optional one (wide line) can be used for 1.2 and 1.3mm sway bars.
The hole parrallel to the engraved line is always the smaller one.

3 A good way to remember this is:

Small line, small sway bars (1.0, 1.1)
Big line, big sway bars (1.2, 1.3)

Engraved line parallel with sway bar, smaller hole
Engraved line perpendicular to sway bar, bigger hole

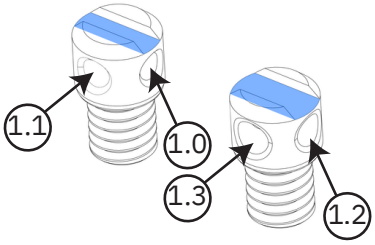

STEP 9.5

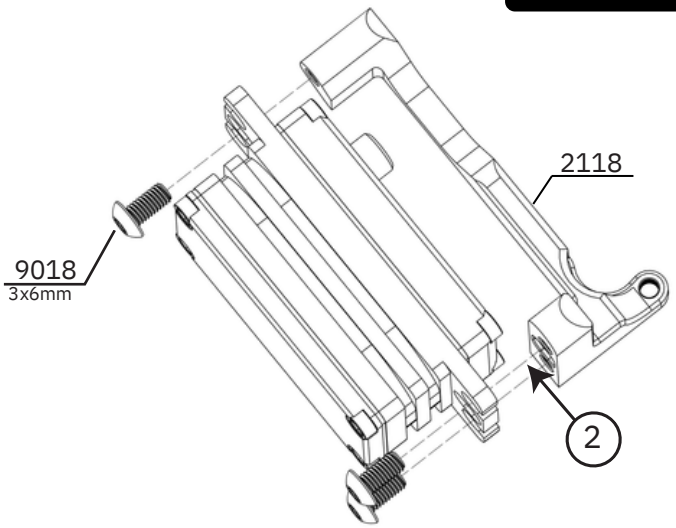

1. Install low profile servo in correct orientation into 2118 servo mount
2. Depending on what servo you use, you may require some shims between the servo and mount if there is no clearance between the face of the servo and the back of the mount as illustrated below.

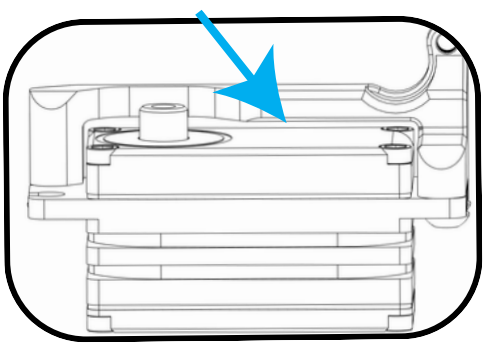

STEP 9 - ANTI-ROLL BARS & SERVO MOUNT

BAG G

PARTS LIST

SKU	Description	QTY
2020A	Steering Rack Arm	2
2021B	Steering Rack Post	2
2056	3x5.5x0.5mm Shim	2
2057	3x5.5x1.0mm Shim	1
2118	Floating Servo Mount	1
2126	Anti-Roll Bar Holder Ball Raced FL/RR	2
2127	Anti-Roll Bar Holder Ball Raced FR/RL	2
2128	Anti-Roll Bar Collar FL/RR	4
2133	Steering Rack (Bearings Fitted)	1
4120	4.3mmx4x6mm Male Polished Ball Stud	3
4121	4.3x6.0mm Male Polished Ball Stud (+1.0mm)	1
4125	Anti-Roll Bar (1.1mm)	2
4129	Anti Roll Bar Adapter Shaft 1.0/1.1	4
6013	5x8x2.5mm Bearing	4
6018	3x6x2.5mm Bearing	6
9017	M3 x 5mm Button Head Screw	4
9018	M3 x 6mm Button Head Screw	4
9027	M3 x 3mm Grub Screw	4
9032	M3x5mm 110deg Flat Head Screw	2
9036	M3x6mm 110deg Flat Head Screw	2
9037	M2x4mm Flat Head Screw	4

STEP 9.6

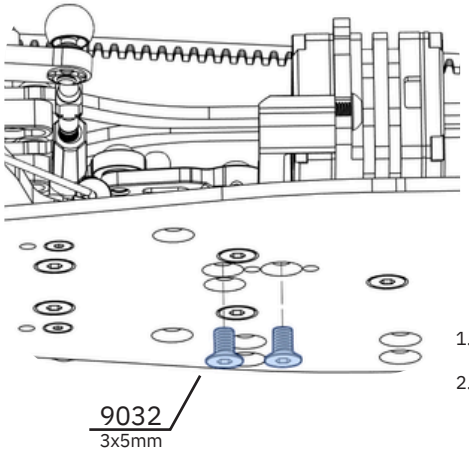

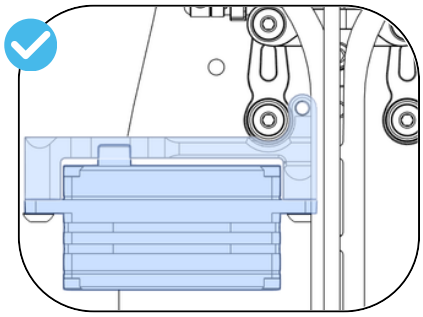

1. Slide servo mount/servo assembly into place and locate the locating pins into the chassis
2. Use 9032 (3x5mm) Screws to fix servo mount in place, and tighten firmly

STEP 9.7

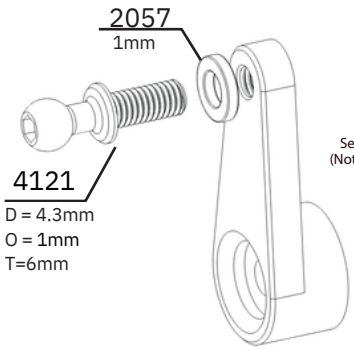

Servo horn
(Not included)

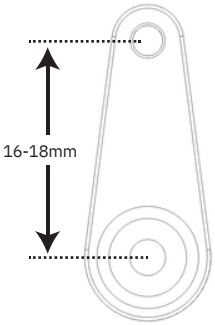

QUICK TIPS

Servo Height is something often used by drivers to tune the feeling of their steering. A shorter horn (16mm) will provide a smoother steering feeling, while a longer one (18mm) will provide a sharper and more responsive feeling. There are many adjustable servo horns on the market today which allow quick adjustments of servo height, which we reccommend using!

1. Select your own servo horn (we suggest 17mm height)
2. Screw 4121 (4.3mm) Ball stud into servo horn with 2057 (3x5.5x1mm) Shim behind
3. Tighten 4121 tightly or use thread lock to prevent loosening

STEP 9.8

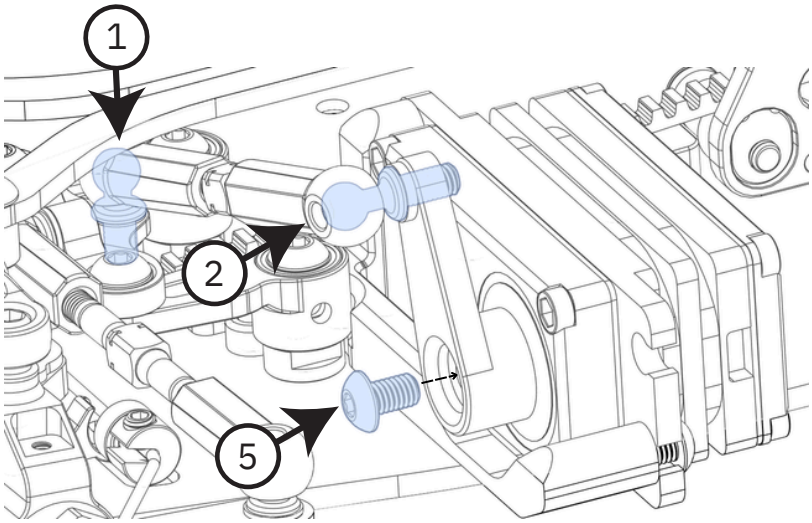

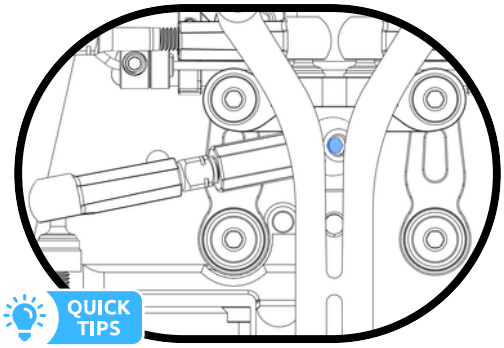

QUICK TIPS

A good way to check the central position of the steering rack is to eyeball the hex of the ballstud through the gap in the topdeck as illustrated above

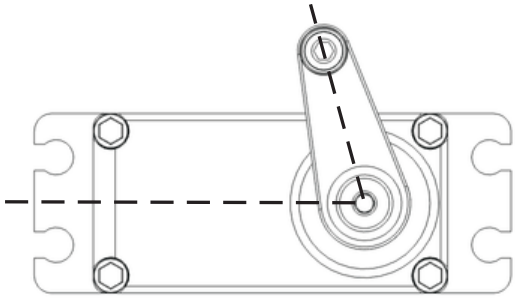

1. Attach previously assembled steering turnbuckle to steering bellcrank in correct
2. orientation (directional line facing the other way as the others on the car)
   Attach recently assembled servo horn to steering turnbuckle ball cup
3. Ensure servo is powered on and trim and sub trim are at zero
4. Attach servo horn in position that most centralises the steering rack as closely as possible - It should be in a similar initial position to the illustration to the right
5. Tighten servo horn onto servo firmly with 9018 (3x6mm) screw

STEP 10 - BATTERY MOUNT, BUMPERS & BRACES

BAG H

PARTS LIST

SKU	Description	QTY
1023	Battery Holder Spacer	2
1024	Battery Holder (1F & 1R)	2
1025	Battery Swivel Hold Down	2
1027	Medium Bulkhead Flex Brace	1
1028	Hard Bulkhead Flex Brace	1
1030	Lower Bumper Mount Brace	1
1118	Front Bumper Mount	1
2022A	Battery Post	2
2058	3x5.5x2mm Shim	4
2142	M3 Insert	3
3013	Front Body Posts	2
3014	Rear Body Posts	2
3023	Rear Bumper	1
3022B/C	Front Lower Bumper Mount	1
3117	Rear Body Mount Spacer	2
7012A	Foam Bumper	1
8019	3x1mm O-Ring	2
9014	M2.5x5mm Button Head Screw	4
9019	M3 x 8mm Button Head Screw	2
9020	M3 x 10mm Button Head Screw	4
9022	M3 x 16mm Button Head Screw	2
9033	M3x8 110deg Flat Head Screw	4
9036	M3x6 110deg Flat Head Screw	1

OPTION



5025 - Brass Battery Hooks (12g ea.)

OPTION



5014 - LCG Battery Weight Set (18g each)

OPTION



5016 - Shorty Battery Weight Set (40g each)

STEP 10.1

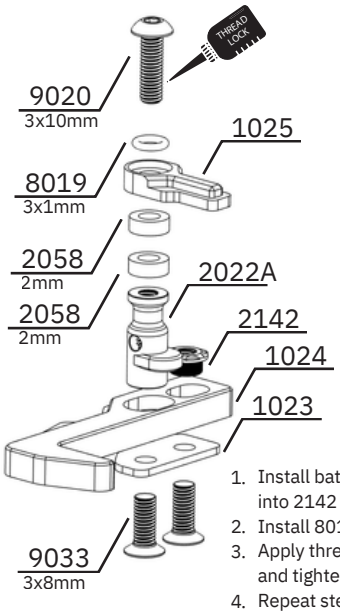

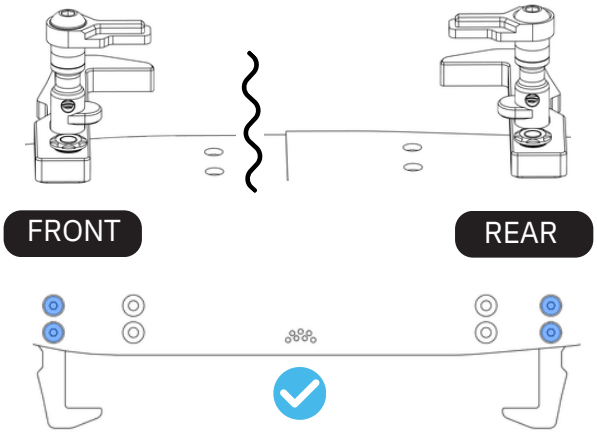

1. Install battery mounts onto correct holes in chassis. Screw 9033 (3x8mm) from underneath into 2142 and 2022A to secure 1024. Leave screws slightly loose until battery is fitted.
2. Install 8019 (3x1mm)O-Ring to underneath the screw head, followed by 1025 and 2x 2058.
3. Apply thread lock to the remaining thread of 9020 (3x10mm) screw, and screw into 2022A and tighten until the resistence on 1025 is reaonsably tight.
4. Repeat steps for front and rear battery mounts, ensuring you're using the correct mount at each end

Before setting this, install your battery, and set one at a time from Step 1 to 4

BATTERY ADJUSTMENT

1 Spur clearance

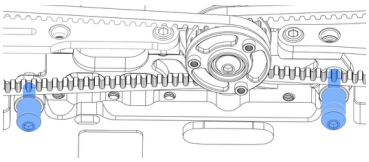

The shims on the motormount can also be altered to move the battery in or out. The kit setting provices enough clearance for most spur gears, but if more clearance is required, you can add shims here and readjust the battery mounts via the process above.

2 Length adjustment

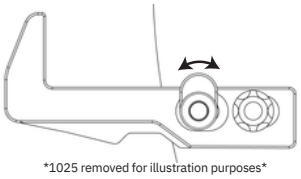

1025 removed for illustration purposes

Rotate battery post eccentric (left or right of centre gives the same effect) to set your battery length ensuring a small amount of movement forwards and backwards. Use 2mm shaft inside the 2022A hole to hold the post while you tighten it firmly in place

3 Height adjustment

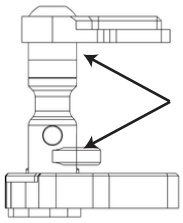

Remove top screw and add shims between swivel and battery post. You can also add the shims between the battery hook and battery post if required

4 Width adjustment

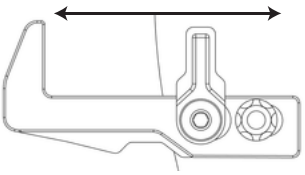

Loosen both lower screws and slide hook left or right. Tighten inner screw first to set the width ensuring the battery has a very small amount of movement in/out. Leave outer post screw loose to set the length in the next step

STEP 10.2

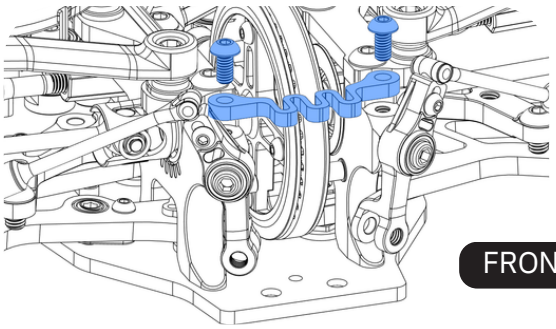

1. Install 1027 on to front bulkheads with 9014 (2.5x5mm) Screws

STEP 10.3

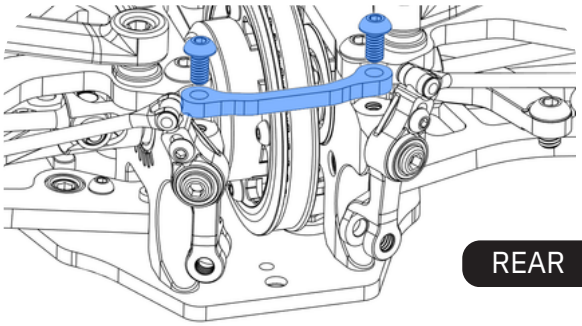

1. Install 1028 on to rear bulkheads with 9014 (2.5x5mm) Screws

STEP 10 - BATTERY MOUNT, BUMPERS & BRACES

BAG H

PARTS LIST

SKU	Description	QTY
1023	Battery Holder Spacer	2
1024	Battery Holder (1F & 1R)	2
1025	Battery Swivel Hold Down	2
1027	Medium Bulkhead Flex Brace	1
1028	Hard Bulkhead Flex Brace	1
1030	Lower Bumper Mount Brace	1
1118	Front Bumper Mount	1
2022A	Battery Post	2
2058	3x5.5x2mm Shim	4
2142	M3 Insert	3
3013	Front Body Posts	2
3014	Rear Body Posts	2
3023	Rear Bumper	1
3022B/C	Front Lower Bumper Mount	1
3117	Rear Body Mount Spacer	2
7012A	Foam Bumper	1
8019	3x1mm O-Ring	2
9014	M2.5x5mm Button Head Screw	4
9019	M3 x 8mm Button Head Screw	2
9020	M3 x 10mm Button Head Screw	4
9022	M3 x 16mm Button Head Screw	2
9033	M3x8 110deg Flat Head Screw	4
9036	M3x6 110deg Flat Head Screw	1

STEP 10.4

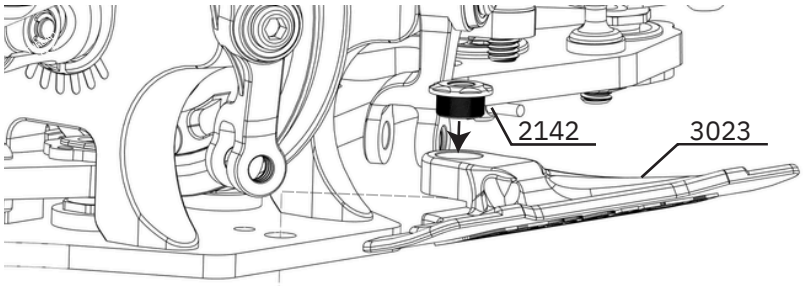

QUICK TIPS

To ensure the rear bumper sits flush with the chassis when using the steel or aluminium chassis, **please install 1133 Carbon Washer from the Unlabelled Bumper Bag,** between the chassis and bumper. Ensure the conical side of the washer is facing downwards.



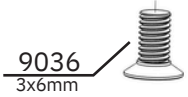

1. Press 2142 Insert into 3023 Rear bumper
2. Using 9036 (3x6mm) Screw, attach bumper to chassis

STEP 10.5

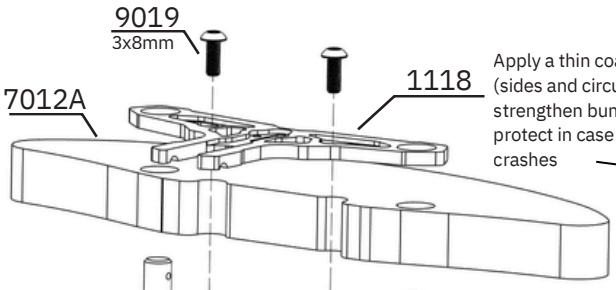

QUICK TIPS

Apply a thin coat of CA to blue area (sides and circular area) to further strengthen bumper stopper area to protect in case of big front-on crashes

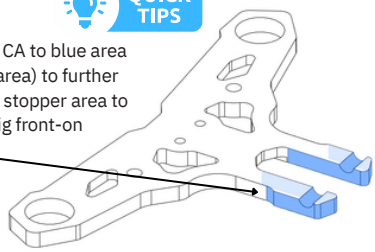

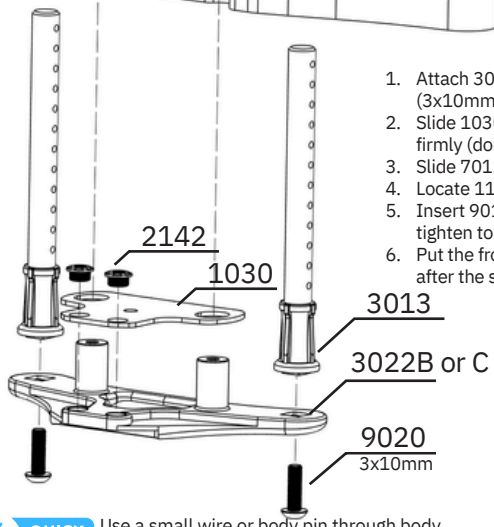

1. Attach 3013 body posts into 3022B or C bumper with 9020 (3x10mm) screws, ensuring pin holes parallel to bumper
2. Slide 1030 plate onto 3022B or C and press 2142 inserts in firmly (don't worry if they don't go all the way)
3. Slide 7012A Foam Bumper down on to 3022B or C all the way
4. Locate 1118 onto body posts and slide all the way down
5. Insert 9019 (3x8mm) screws into 3mm holes in 1118 and tighten to pull the assembly together
6. Put the front bumper to the side, we will attach in a later step after the shocks are attached

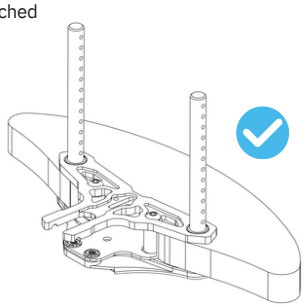

QUICK TIPS

Use a small wire or body pin through body post holes to hold them while tightening

OPTION



2148 - Adjustable Hood Support

OPTION



3136 - 3D Honeycomb Front Bumper (10g)

STEP 10.6

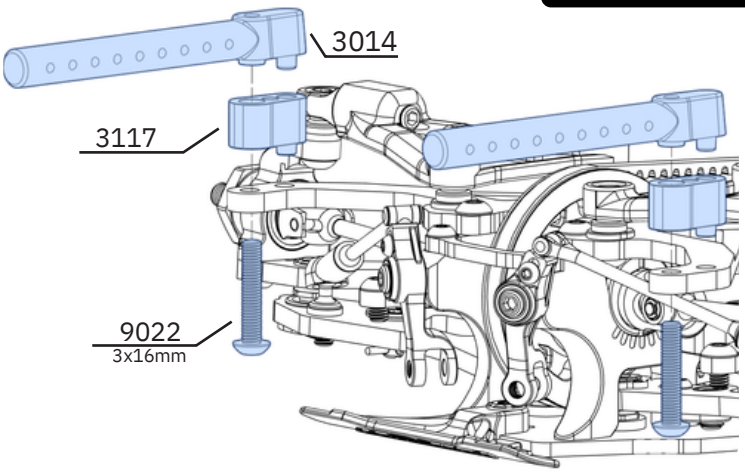

1. Press 3014 into 3117 in correct orientation
2. Press both parts into the rear body mount
3. Use 9022 (3x16mm) screw from underneath to fix the rear body post assembly to the body mount and tighten

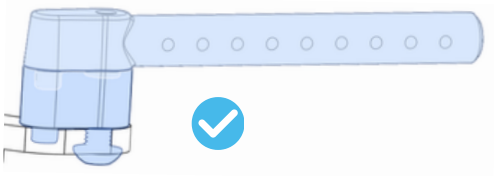

STEP 11 - SHOCK ABSORBERS

BAG 1

PARTS LIST

SKU	Description	QTY
2119	Linear Shock Body	4
2120	Shock Top Cap	4
2121	Shock Bottom Cap	4
2122	Shock Collar	4
3110	Shock Upper Mount	4
3111	Shock Lower Ball Cup	4
3114	Shock Guide	4
3113	Spring Retainer	4
3122	4x1.0mm Machined Shock Piston	4
4047	3mm Shock Piston E-Clips	10
4113	Lower Rocker Mount Screw	4
4118	4.8mm Female Polished Ball Stud	4
4123	Shock Shaft	4
7010	Soft Shock Bladder	4
8011	Shock Collar O-Ring	4
8012	Shock Bottom O-Ring	4
11015	XS Shock Spring 4.25 Coils	2
11016	XS Shock Spring 4.5 Coils	2
9036	M3x6mm 110deg Flat Head Screw	2
9040	M2x4mm Button Head Screw	3

EXPLODED VIEW

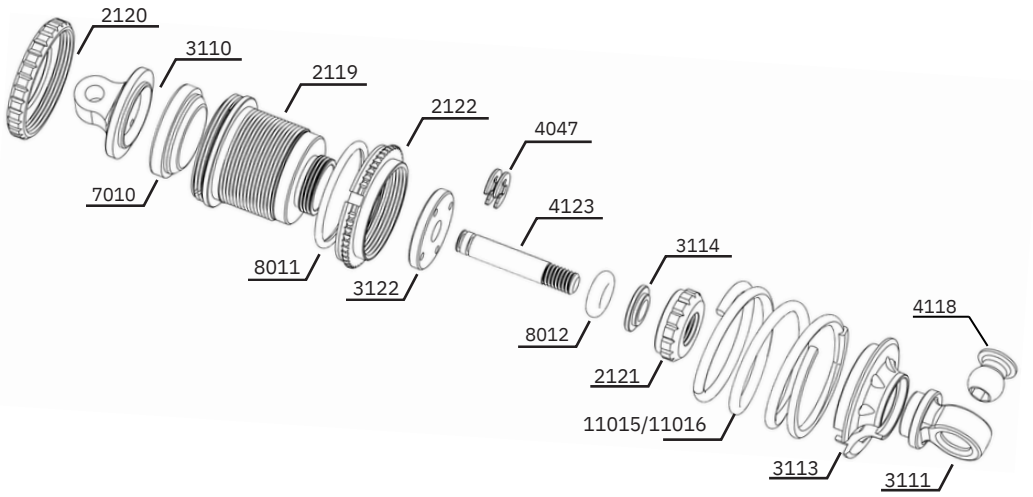

STEP 11.1

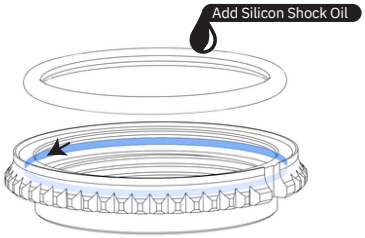

MAKE 4

1. Add silicon shock oil to 8011 O-Rings
2. Install 8011 O-Ring into slot in 2122 collar

STEP 11.2

4 TIMES

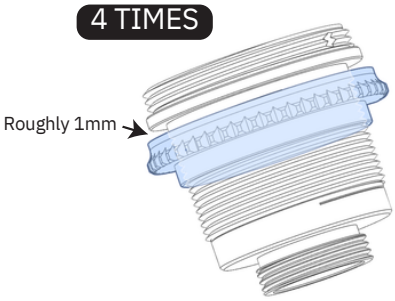

1. Thread spring collar assemblies onto shock bodies until roughly 1mm from the top

STEP 11.3

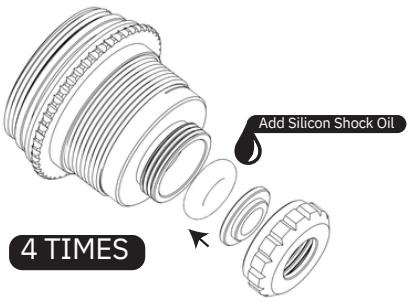

4 TIMES

1. Add silicon shock oil to 8012 O-Rings
2. Insert o-ring, followed by shock guide
3. Thread bottom cap on to body and tighten

STEP 11.4

MAKE 4

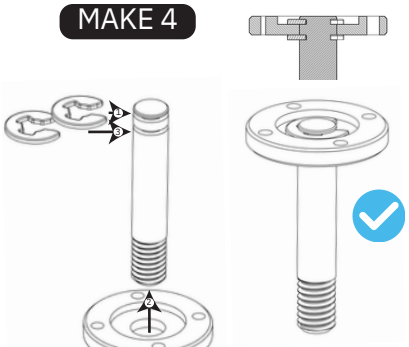

1. Insert e-Clip on top slot of shock shaft
2. Slide piston onto shaft with recess facing upwards
3. Install second e-clip to secure piston

STEP 11.5

4 TIMES

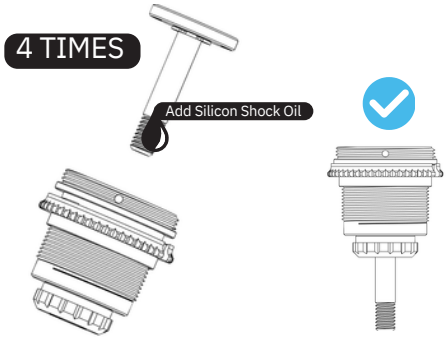

1. Add a drop of silicon oil to the threads of the shock shaft
2. Insert Piston/Shaft assembly into shock body

STEP 11.6

2 FRONT

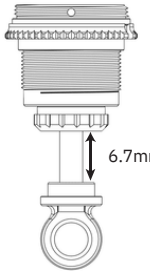

2 REAR

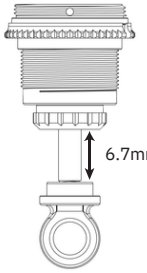

1. Use shock shaft pliers to avoid shaft damage
2. Thread 3111 Shock Lower Ball Cup onto shaft
3. Make 2 Front and 2 Rear, both at 6.7mm

STEP 11.7

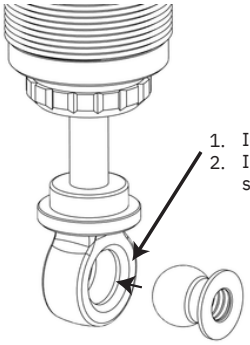

4 TIMES

1. Identify shiny side of lower ball cup
2. Insert 4118 (4.8mm) Ball into lower ball cup from shiny side

STEP 11 - SHOCK ABSORBERS

BAG 1

PARTS LIST

SKU	Description	QTY
2119	Linear Shock Body	4
2120	Shock Top Cap	4
2121	Shock Bottom Cap	4
2122	Shock Collar	4
3110	Shock Upper Mount	4
3111	Shock Lower Ball Cup	4
3114	Shock Guide	4
3113	Spring Retainer	4
3122	4x1.0mm Machined Shock Piston	4
4047	3mm Shock Piston E-Clips	10
4113	Lower Rocker Mount Screw	4
4118	4.8mm Female Polished Ball Stud	4
4123	Shock Shaft	4
7010	Soft Shock Bladder	4
8011	Shock Collar O-Ring	4
8012	Shock Bottom O-Ring	4
11015	XS Shock Spring 4.25 Coils	2
11016	XS Shock Spring 4.5 Coils	2
9036	M3x6mm 110deg Flat Head Screw	2
9040	M2x4mm Button Head Screw	3

STEP 11.8

2 FRONT

2 REAR

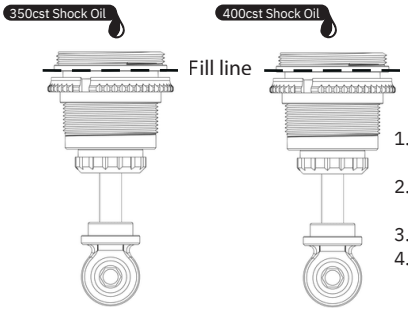



1. Using a shock stand or vacuum pump, fill shocks up with 350cst silicon oil front and 400cst in the rear
2. Pump piston up (but not quite to the top) and down several times quickly, until air is visible in the body, and pull shaft all the way down
3. Ensure oil volume is still high enough, if not add a few drops to top it up
4. Set shocks aside or use vacuum pump to remove air

STEP 11.9

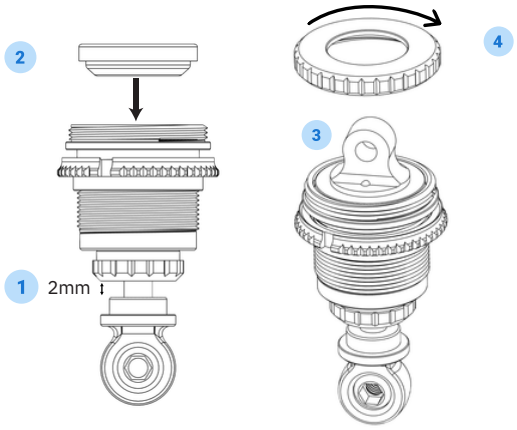

4 TIMES

1. Push shaft up until 2mm from fully compressed
2. Install and push 7010 bladder down fully into the shock body
3. Install 3110 upper ball cup into bladder and push down lightly
4. Thread on 2120 top cap slowly and tighten while keeping shaft up
5. Ensure smooth feeling without air bubbles. If air bubbles are present, refill and repeat bleeding process

STEP 11.10

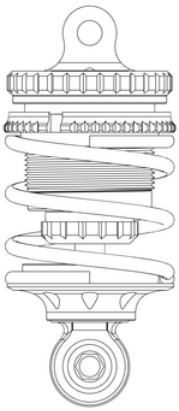

4 TIMES

1. Install 4.5 on front and 4.25 on the rear shock bodies
2. Compress spring and insert 3113 spring retainer
3. Release spring and seat retainer down into shock bottom ball cup

Ensure you keep front and rear separate due to the different oils, springs and in future, possible different shock lengths.

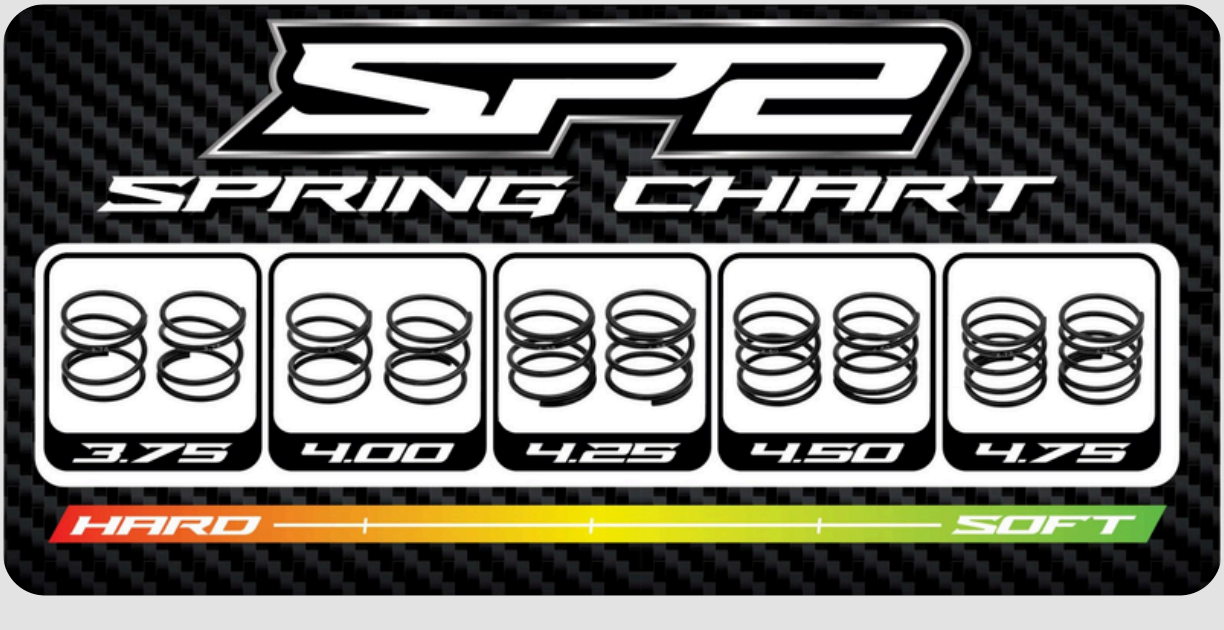

STEP 12 - FINAL FITMENTS

BAG 1

PARTS LIST

SKU	Description	QTY
2119	Linear Shock Body	4
2120	Shock Top Cap	4
2121	Shock Bottom Cap	4
2122	Shock Collar	4
3110	Shock Upper Mount	4
3111	Shock Lower Ball Cup	4
3114	Shock Guide	4
3113	Spring Retainer	4
3122	4x1.0mm Machined Shock Piston	4
4047	3mm Shock Piston E-Clips	10
4113	Lower Rocker Mount Screw	4
4118	4.8mm Female Polished Ball Stud	4
4123	Shock Shaft	4
7010	Soft Shock Bladder	4
8011	Shock Collar O-Ring	4
8012	Shock Bottom O-Ring	4
11015	XS Shock Spring 4.25 Coils	2
11016	XS Shock Spring 4.5 Coils	2
9036	M3x6mm 110deg Flat Head Screw	2
9040	M2x4mm Button Head Screw	3

STEP 12.1

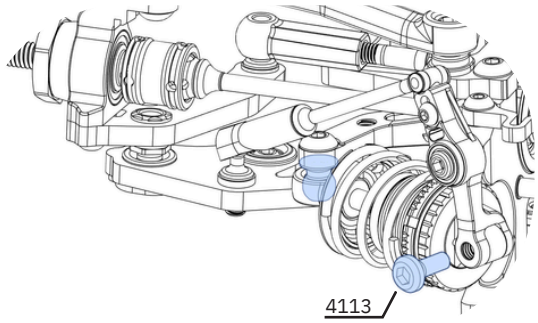

1. Slide front shock into lower section of front rocker
2. Use 2.5mm Hex Driver into 4113 screw to attach shock to rocker
3. Use 2.5mm Hex Driver to attach shock bottom to shock bulkhead mount

Repeat above steps for front and rear, left and right ensuring you use the correct shocks on the front and rear (left and right are interchangeable)

4 TIMES

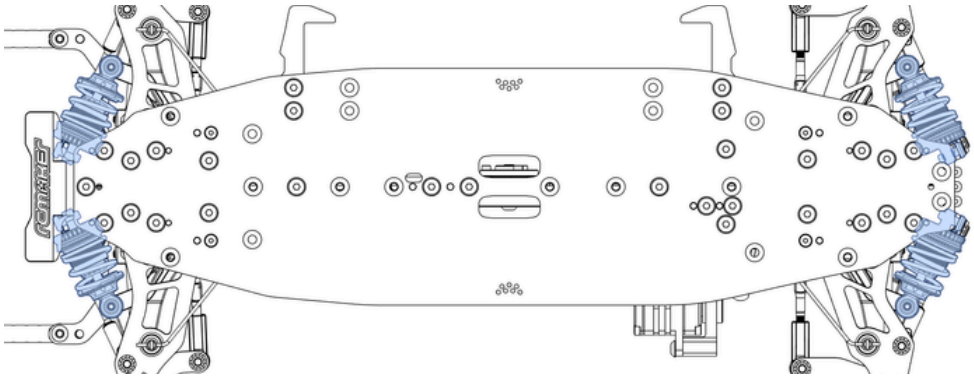

STEP 12.2

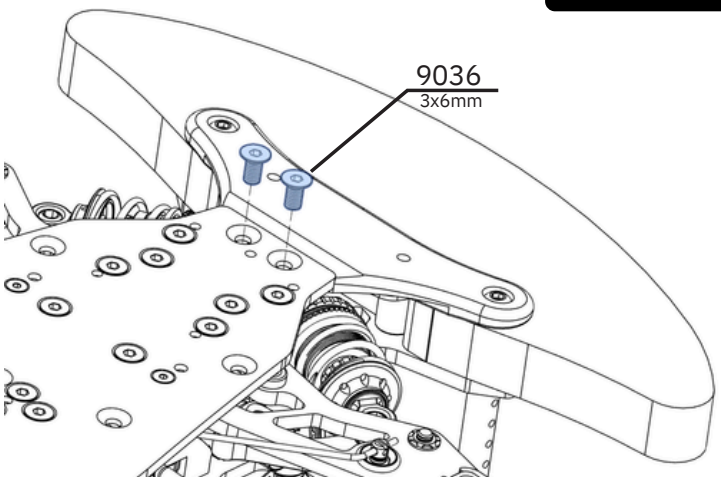

1. Attach front bumper by screwing 9036 (3x6mm) screws through the holes in the chassis and into the bumper

STEP 12.3

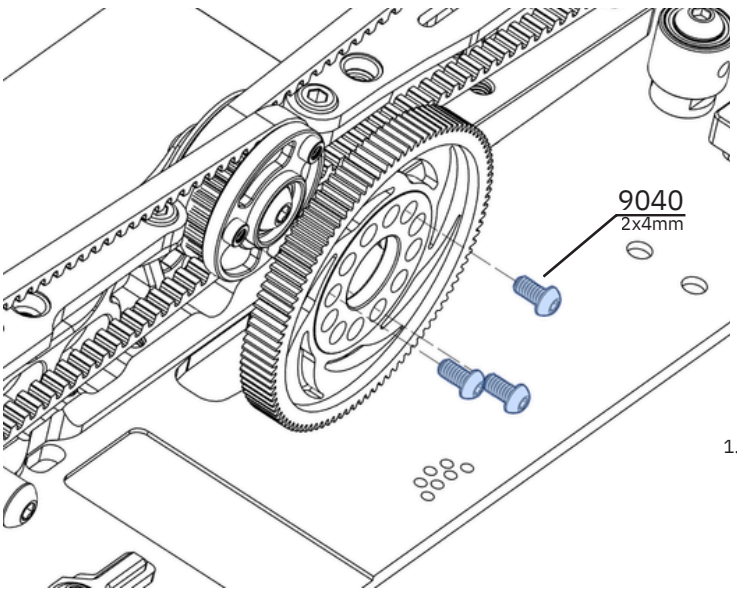

Internal Ratio: 38/20 = 1.9

1. Attach spur gear (not included) to layshaft with 9040 (2x4mm) screws
   We suggest using a small amount of loctite on the screws to prevent loosening

64P FOR CHART

	80	82	84	86	88	90	92	94	96	98	100	102	104	106	108	110	112
25													7.9	8.06	8.21	8.36	8.51
26												7.45	7.6	7.75	7.89	8.04	8.18
27												7.18	7.32	7.46	7.6	7.74	7.88
28											6.79	6.92	7.06	7.19	7.33	7.46	7.6
29											6.55	6.68	6.81	6.94	7.08	7.21	7.34
30										6.21	6.33	6.46	6.59	6.71	6.84	6.97	7.09
31										6.01	6.13	6.25	6.37	6.5	6.62	6.74	6.86
32									5.7	5.82	5.94	6.06	6.18	6.29	6.41	6.53	6.65
33									5.53	5.64	5.76	5.87	5.99	6.1	6.22	6.33	6.45
34								5.25	5.36	5.48	5.59	5.7	5.81	5.92	6.04	6.15	6.26
35								5.1	5.21	5.32	5.43	5.54	5.65	5.75	5.86	5.97	6.08
36							4.86	4.96	5.07	5.17	5.28	5.38	5.49	5.59	5.7	5.81	
37							4.72	4.83	4.93	5.03	5.14	5.24	5.34	5.44	5.55	5.65	
38						4.5	4.6	4.7	4.8	4.9	5	5.1	5.2	5.3	5.4		
39						4.38	4.48	4.58	4.68	4.77	4.87	4.97	5.07	5.16	5.26		
40					4.18	4.28	4.37	4.47	4.56	4.66	4.75	4.85	4.94	5.04			
41					4.08	4.17	4.26	4.36	4.45	4.54	4.63	4.73	4.82	4.91			
42				3.89	3.98	4.07	4.16	4.25	4.34	4.43	4.52	4.61	4.7				
43				3.8	3.89	3.98	4.07	4.15	4.24	4.33	4.42	4.51	4.6				
44			3.63	3.71	3.8	3.89	3.97	4.06	4.15	4.23	4.32	4.4					
45			3.55	3.63	3.72	3.8	3.88	3.97	4.05	4.14	4.22	4.31					
46		3.39	3.47	3.55	3.63	3.72	3.8	3.88	3.97	4.05	4.13						
47		3.31	3.4	3.48	3.56	3.64	3.72	3.8	3.88	3.96	4.04						
48	3.17	3.25	3.33	3.4	3.48	3.56	3.64	3.72	3.8	3.88							
49	3.1	3.18	3.26	3.33	3.41	3.49	3.57	3.64	3.72	3.8							
50	3.04	3.12	3.19	3.27	3.34	3.42	3.5	3.57	3.65								
51	2.98	3.05	3.13	3.2	3.28	3.35	3.43	3.5	3.58								
52	2.92	3	3.07	3.14	3.22	3.29	3.36	3.43									
53	2.87	2.94	3.01	3.08	3.15	3.23	3.3	3.37									
54	2.81	2.89	2.96	3.03	3.1	3.17	3.24										
55	2.76	2.83	2.9	2.97	3.04	3.11	3.18										
56	2.71	2.78	2.85	2.92	2.99	3.05											
57	2.67	2.73	2.8	2.87	2.93	3											

STEP 12 - FINAL FITMENTS

BAG J

PARTS LIST

SKU	Description	QTY
2119	7075 Alu Wheel Nut	4
2120	Body Clip	8
9018	M3x6mm Button Head Screw	2

STEP 12.4

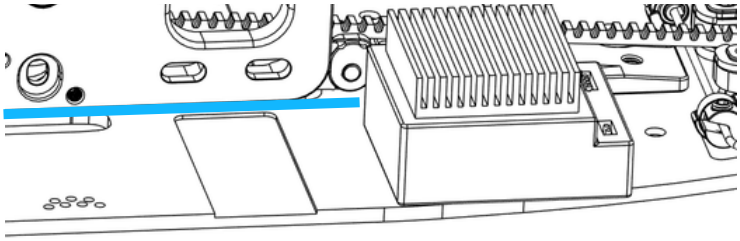

QUICK TIPS

This section of the motormount is removed to allow the ESC Signal wire to pass through. We suggest installing this wire and the ESC before attaching the motor

STEP 12.5

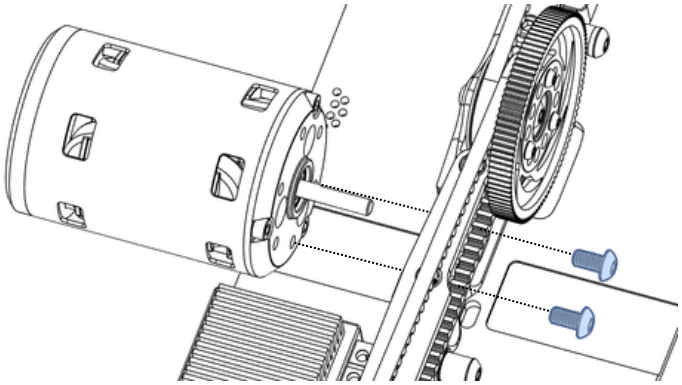

1. Use 2x 9018 (3x6mm) Screws to install motor and leave ¼ turn loose so the motor can slide on the motormount

STEP 12.6

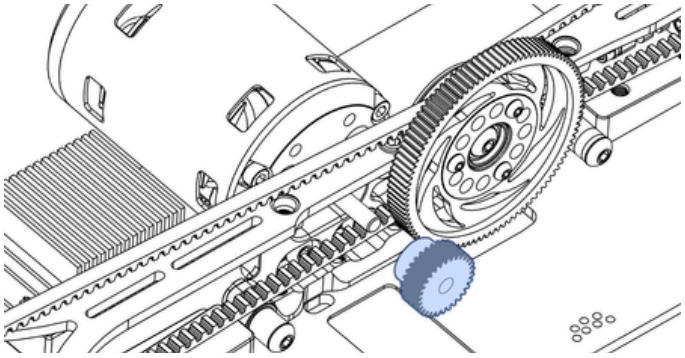

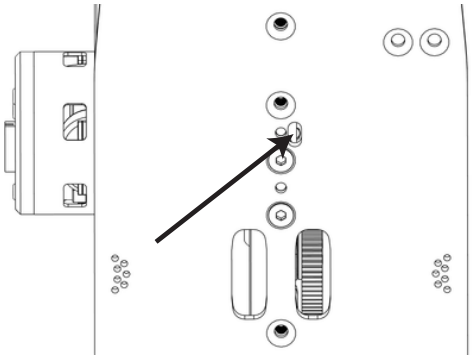

QUICK TIPS

The pinion grub screw can be accessed easily through this small window in the chassis. Just install the 1.5mm driver and shift the belt to one side.

1. Install Pinion gear (not included), align with spur gear and tighten to motor
2. Shift motor to correct gear mesh position and tighten 2x 9019 Screws

ELECTRONICS PLACEMENT

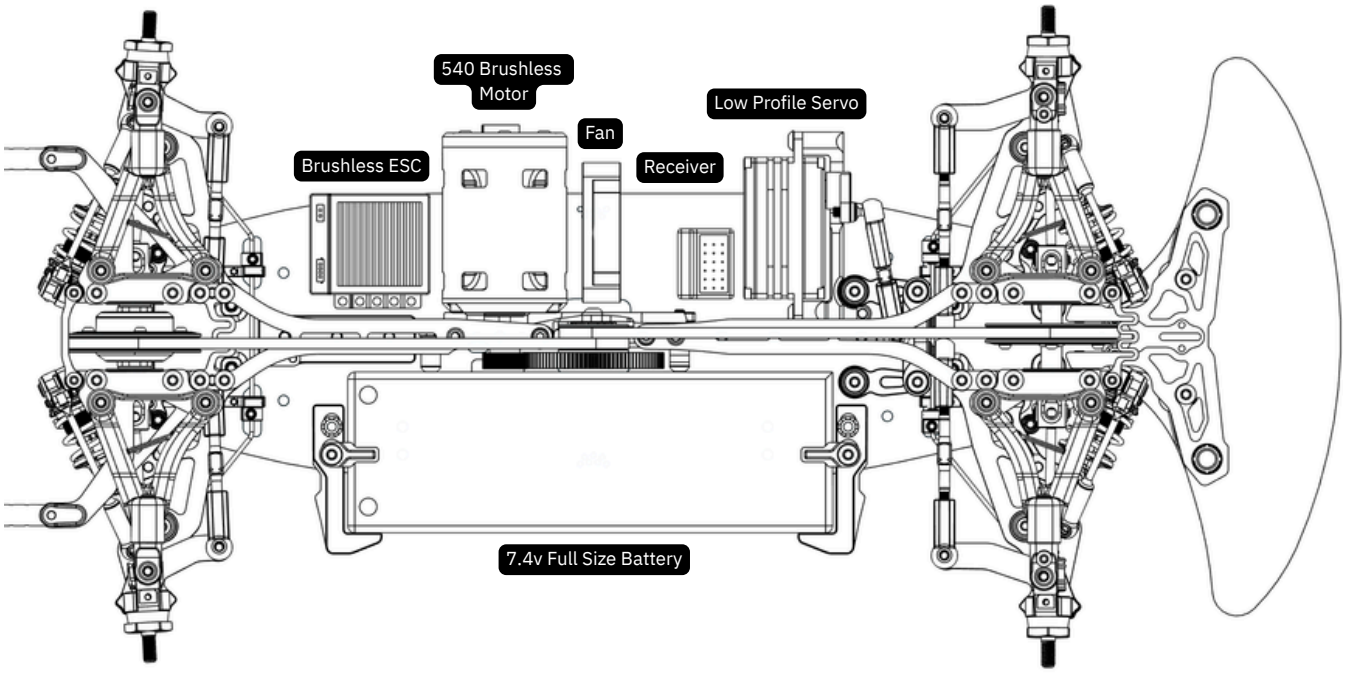

COMPLETE

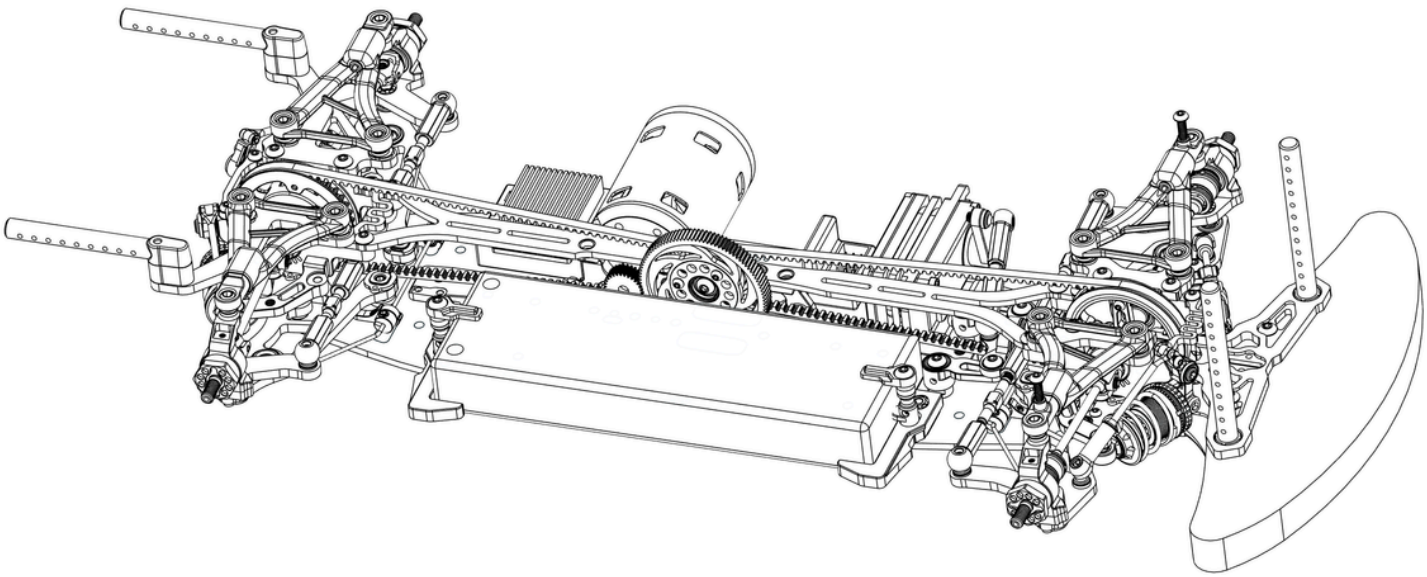

ADJUSTMENT INFORMATION

RIDE HEIGHT

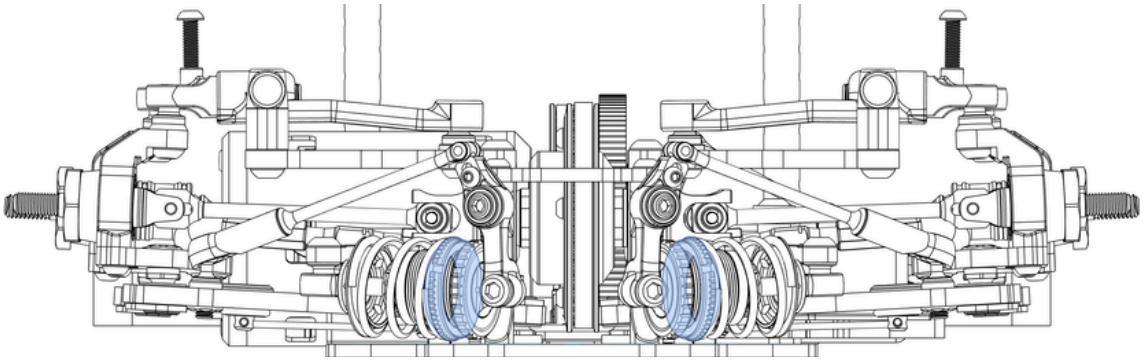

Ride height is adjusted with the shock collars. Screwing the collar down increases the ride height, screwing the collar up reduces the ride height. Because the shocks are laid down, they need to be adjusted opposite directions to have the same result.

Eg. To increase ride height, the right shock collar needs to be screwed towards you, while the left needs to be screwed away from you.

DROOP

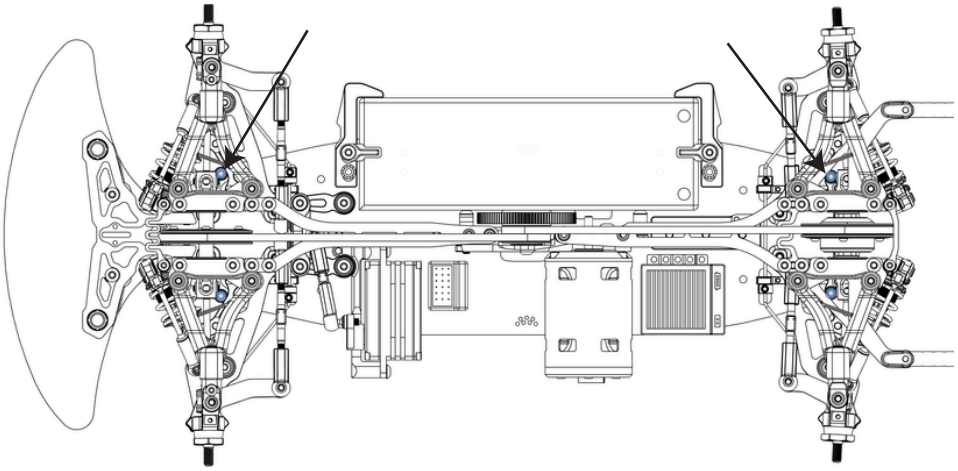

Droop is adjusted with a 2mm hex driver from the top of the car.

Screw in - Less Droop
Screw out = More Droop

Droop gauges are used to measure the amount of droop on the chassis. We strongly recommend using an axle based droop gauge than an arm based one, as it is more accurate and can also be used to set the up stops. It is also more suitable to use with the SP2 due to the arm design and the clip position on the bottom of the arm.

A typical axle based setting starts at 23.6mm Front and 22.6mm Rear.

UP STOP

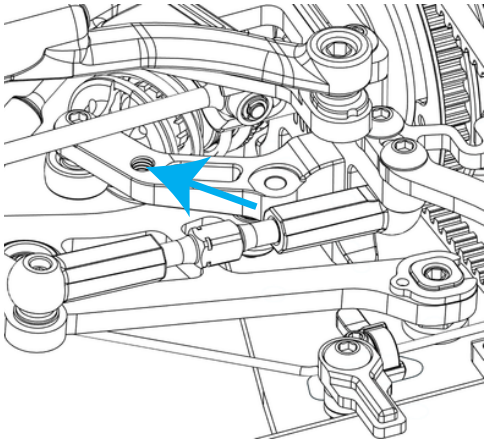

Up stops are a relatively new addition to most high level touring cars, and the SP2 is no exception. Up stop refers to the amount of upwards travel the suspension arm can have, thus limiting the amount the chassis can roll. Up stops can be particularly useful, as they allow you to more finely tune the suspension by allowing you to run a softer spring than normal to help on bumps, but then limiting the chassis roll when cornering, for example.

On the SP2, the shock mounts have an additional M3 hole machined into them for an up-stop. In this M3 hole, you can choose to install an **M3 Grub Screw with Loctite**, OR an **M3 Button Head Screw with/without a 3x5.5mm shim underneath.** This screw will touch on the suspenson arm and limit the up travel of the suspension.

- **Grub Screw**

A grub screw allows for very fine tuning of your upstop. You can measure your up-stop by removing the shocks, then use an axle based droop gauge, without any droop blocks underneath the chassis (Chassis flat on setup board). **A typical starting upstop measurement is 23mm front and rear**, and is usually tuned in the range of 21-23mm. You screw the grub screw in to lower the up travel, and screw it out to increase the up travel.

- **Button Head Screw & Shim**

If you wish to use an M3 Button Head screw and shim for simpler setting, we suggest starting with an M3x6 Button Head with 1mm thick shim underneath. To reduce up travel you can reduce the thickness of the shim, or to increase up travel you can increase the thickness of the shim.

We do strongly suggest using some form of upstop as it helps to protect the rockers from hard impacts.

CAMBER

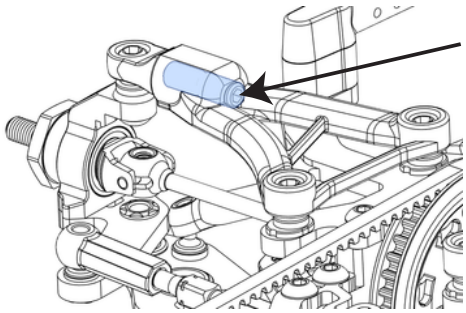

Camber is adjusted through the 2mm hex screw on the arm.

Screw in - More Camber
Screw out = Less Camber

TOOL

IN8-70002 - HexLite Multi-Tool 4mm Turnbuckle & 2mm Hex (Bronze)



INOV8

TOOL

IN8-70001 - HexLite Multi-Tool 4mm Turnbuckle & 2mm Hex (Black)



INOV8

SP2 SETUP SHEET — RCMAKER

DRIVER	DATE / /	BEST LAP	LAYOUT ☐ TECHNICAL ☐ MIXED ☐ FLOWING
TRACK	CLASS	BEST RUN Laps :	TEMP TRACK c AIR c
EVENT	RESULT QUALIFYING FINALS	SURFACE	TRACTION ☐ LOW ☐ MEDIUM ☐ HIGH

TRANSMISSION

FRONT		REAR	
DRIVE	☐ SPOOL ☐ DIFF	DIFF OIL	cst
OIL (ONLY IF USING DIFF)	cst	DIFF OIL WEIGHT	g
PITCH	☐ 64 ☐ 48	BELTS	☐ LF ☐ STD ☐ HD
SPUR		PIN	FDR

SHOCKS

FRONT		REAR
coils	SPRING	coils
CST ☐	OIL	☐ WT
☐ STD	PISTON	☐ STD
☐ PRG ☐ LIN	BODY	☐ PRG ☐ LIN
mm	LENGTH	mm

TIRES

TIRES				
ADDITIVE				
ADDITIVE TIME	Fr	min/Rr	min	
WARMER TIME	Fr	min/Rr	min	
WARMER TEMP	Fr	deg/Rr	deg	

BODY

TYPE					
WEIGHT	grams	THICK	☐ 0.4	☐ 0.5	☐ 0.7
WING TYPE		THICK	☐ 0.4	☐ 0.5	☐ 0.7
POSITION (LOWER WINDSCREEN MOLD TO CENTRE FRONT BODY POST)	ST EXPO	mm			
HEIGHT (FROM GROUND AT RIDE HEIGHT)	mm	WING	mm		

ELECTRONICS

RADIO	ST EXPO	%
SERVO		
ESC		
MOTOR		
BATTERY		

NOTES

FRONT

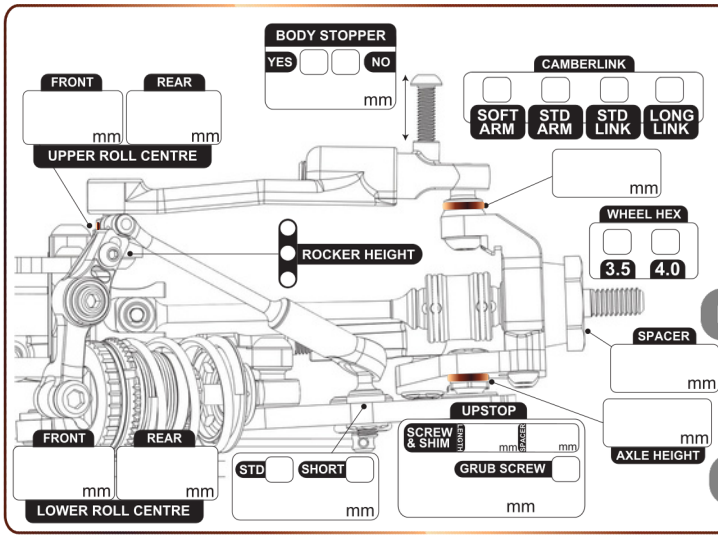

CAMBER		deg
CASTER		deg
TOE OUT		deg
RIDE HEIGHT		mm
DROOP	☐ ARM ☐ AXLE	mm
DIFF HEIGHT	☐ LOW	☐ HIGH
ANTI ROLL BAR	☐ 1.0 ☐ 1.1 ☐ 1.2 ☐ 1.3	
STEERING LOCK	deg INSIDE	deg OUTSIDE

REAR

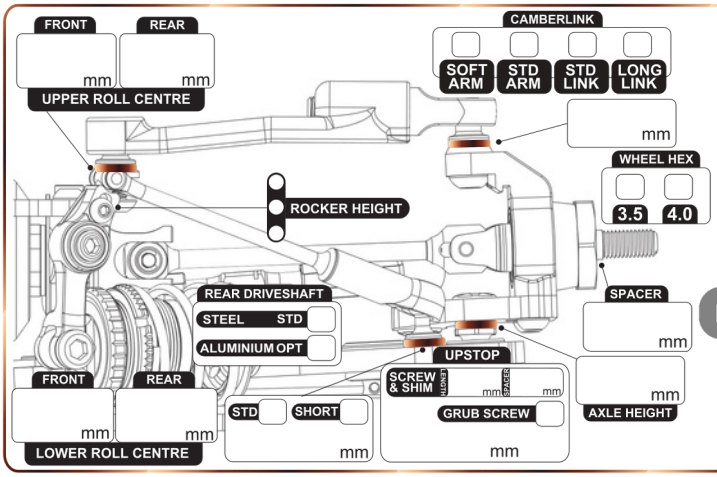

CAMBER		deg
CASTER		deg
TOE IN		deg
RIDE HEIGHT		mm
DROOP	☐ ARM ☐ AXLE	mm
DIFF HEIGHT	☐ LOW	☐ HIGH
ANTI ROLL BAR	☐ 1.0 ☐ 1.1 ☐ 1.2 ☐ 1.3	

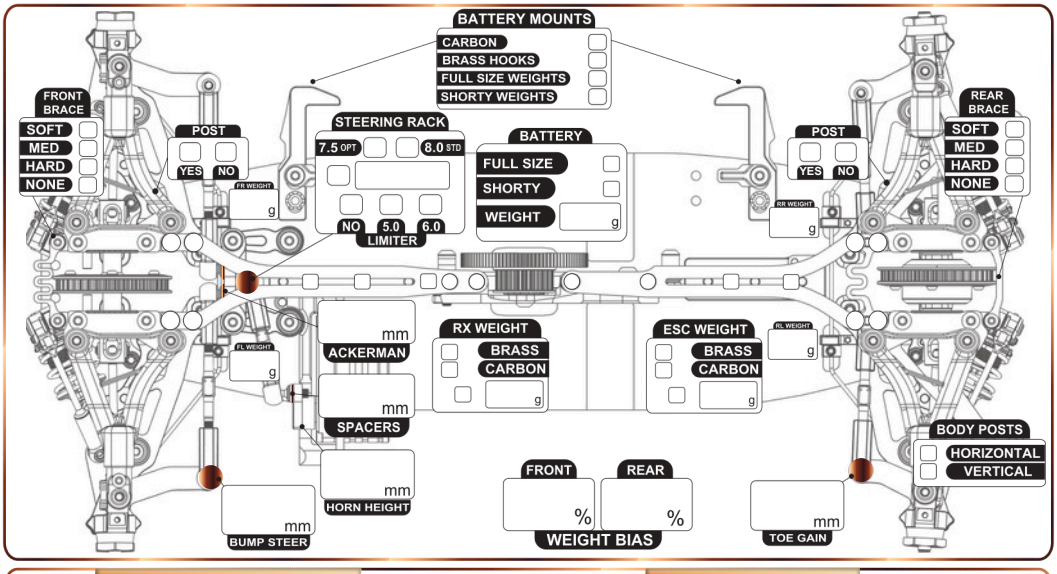

TOPDECK

FRONT — TYPE ☐ 1 PC ☐ 2 PC — REAR

THICKNESS: mm — mm

MATERIAL: ☐ C/F ☐ FRP — ☐ C/F ☐ FRP

BRACE: ☐ CUT ☐ FLEX ☐ SOLID

CHASSIS

FRONT	MOTORMOUNT	REAR
STIFFENER: ☐ BRASS ☐ CARBON	CHASSIS TYPE: ☐ 2.2MM CARBON ☐ 1.5MM ALUMINIUM ☐ 1.2MM SPRING STEEL ☐ OTHER	STIFFENER: ☐ CARBON ☐ BRASS ☐ TENSIONER

PARTTYPEKEY: SP1 Option (also fits SP2) SP1 Part (also fits SP2) SP2 New Kit Part SP2 New Option

PART #	DESCRIPTION	PER PACK
KITS		
0005	SP2 1/10th EP Onroad Touring Car - Carbon	1
0006	SP2 1/10th EP Onroad Touring Car - 1.5 Alu	1
0007	SP2 1/10th EP Onroad Touring Car - Steel	1
CARBON		
1021	Suspension Arm Clips	10
1023	Battery Holder Spacer	2
1024	Battery Holder (1F & 1R)	2
1025	Battery Swivel Hold Down	2
1027	Medium Bulkhead Flex Brace	1
1028	Hard Bulkhead Flex Brace	1
1029	0.5mm x 7.5mm Carbon Weight Shim	2
1030	Lower Bumper Mount Brace	1
1044	Rear Body Mount Shim Plate Set	1
1055	Carbon Rear Chassis Plate Stiffener Brace	1
1056	Carbon Front Chassis Plate Stiffener Brace	1
1110	2.2mm Carbon Fiber Chassis	1
1111	Front Suspension Arm	2
1112	Rear Suspension Arm	2
1113	Front Steering Knuckles (w/Inserts)	2
1114	Rear Steering Knuckles (w/Inserts)	2
1115	Front Upper Bulkheads (L & R)	2
1116	Rear Left Upper Bulkhead/Horiz Body Mount	1
1117	Rear Right Upper Bulkhead/Horiz Body Mount	1
1118	Front Bumper Mount	1
1119	2.0mm Carbon Topdeck - Front	1
1120	2.0mm Carbon Topdeck Med Flex - Rear	1
1121	Diff Tools	2
1122	2.0mm 1 piece Carbon Topdeck - Med Flex	1
1123	2.0mm FRP 1 piece Topdeck - Med Flex	1
1124	2.0mm 1 piece Topdeck - Solid	1
1125	2.0mm FRP 1 piece Topdeck - Solid	1
1126	2.0mm Carbon Topdeck Solid - Rear	1
1127	2.0mm FRP Topdeck - Front	1
1128	Hub Aero Disc (2)	2
1129	2.0mm Carbon 1 Piece Topdeck	1
1130	2.0mm FRP Topdeck Solid - Rear	1
1131	Rear Left Upper Bulkhead/Vert Body Mount	1
1132	Rear Right Upper Bulkhead/Vert Body Mount	1
1133	3x8x1mm Countersunk Carbon Washer	2

© RC MAKER

PART#	DESCRIPTION	PER PACK
ALUMINIUM		
2020A	Steering Rack Arm	1
2021B	Steering Rack Post	1
2022A	Battery Posts	2
2024	Turnbuckles - Steering (44mm)	2
2026A	Spool Housing	1
2034A	4.0mm Wheel Hex	2
2035	Upper Bulkhead Inserts - 1 Dot	4
2036	Upper Bulkhead Inserts - 2 Dot	4
2056	3x5.5x0.5mm Shim	10
2057	3x5.5x1.0mm Shim	10
2058	3x5.5x2.0mm Shim	10
2059	3x8x0.5mm Shim	10
2060	3x8x1mm Shim	10
2061	3x8x1.5mm Shim	10
2110	FL/RR Bulkhead	1
2111	FR/RL Bulkhead	1
2112	Bulkhead Shock Connector	1
2115-1	Rocker Arm Short (Side 1)	1
2115-2	Rocker Arm Short (Side 2)	1
2116-1	Rocker Arm Long (Side 1)	1
2116-2	Rocker Arm Long (Side 2)	1
2118	Floating Servo Mount	1
2119	Linear Shock Body	1
2120	Shock Top Cap	1
2121	Shock Bottom Cap	1
2122	Shock Collar	1
2123	Anti Roll Bar Adapter Ball 4.8mm	2
2126	Anti-Roll Bar Holder Ball Raced FL/RR	1
2127	Anti-Roll Bar Holder Ball Raced FR/RL	1
2128	Anti-Roll Bar Collar	2
2130	Diff Housing Small	1
2131	Diff Housing Large	1
2132	Outer Wheel Hub	1
2133	Steering Rack (3x6x2.5 SS Bearings Fitted)	1
2134	Steering Limiter 5.0mm	1
2135	Steering Limiter 5.5mm	1
2136	Centre Layshaft Pulley Housing (3 Hole)	1
2137	Motor Mount	1
2138	Turnbuckle - Steering Servo (23mm)	1
2139	Crush Washer	2
2140	Turnbuckles - Rear Steering (34mm)	2
2141	5.8x12.7mm Stiffener Post	2

© RC MAKER

PART#	DESCRIPTION	PER PACK
2142	M3 Threaded Insert	5
2142B	M3 Threaded Insert - Bronze	5
2143	7075 T6 Aluminium Chassis	1
2144	Rear Belt Tensioner w/Bearings	1
2145	Alu Rear Driveshaft w/Pin	1
2146	0.5mm Steel Chassis Roll Centre Washer	4
2147	Adjustable Caster Tool	2
2148	Front Hood Stiffener	1
PLASTIC		
3010	Droop Screw Inserts	4
3012	4.3mm Long Ball Cup	10
3013	Front Body Posts	2
3014	Rear Body Posts	2
3017	Upper Arm FL/RR	1
3018	Upper Arm FR/RL	1
3019	Diff Eccentric	4
3020	Upper Arm Ball Cup Front	2
3021	Upper Arm Ball Cup Rear	2
3022B	Front Lower Bumper Mount	1
3022C	Front Lower Bumper Mount (Thin Chassis)	1
3023	Rear Bumper	1
3025	Centre Pulley	1
3026A	Lower Arm Ball Cup	10
3028	38 Tooth Spool/Diff Pulley Set	1
3030	Internal Diff Gear Large	2
3031	Internal Diff Gear Small	4
3032	Diff Cross Pin	1
3040-1	Nylon Wheel Hex Washers	4
3041	Upper Arm A (Soft)	1
3042	Upper Arm B (Soft)	1
3110	Shock Upper Cap	1
3111	Shock Lower Ball Cup	2
3113	Shock Retainer High	2
3114	Shock Guide	4
3117	Rear Body Mount Spacer	2
3118	Anti-Roll Bar Ball Cup 4.8mm	4
3119	4.3mm Lower Push Rod Ball Cup	2
3120	Turnbuckle Upper Arm Part 1 & 2	2
3122	Shock Piston 4 Holes 1.0mm	2
3134	3026A Ball Cup Tool	1
3135	Diff O-ring/Wheel Hex Tool	1
3136	3D HoneyComb Front Bumper (10g)	1

© RC MAKER

PART#	DESCRIPTION	PER PACK
STEEL		
4012A	Front Axle	1
4013A	Rear Axle	1
4014	Front Driveshaft Coupling	2
4015	Front Driveshaft Stud	2
4016	Rear Driveshaft Stud	2
4017	1.6 x 9mm Front Driveshaft Pin	4
4018	2.0mm Rear Driveshaft Pin	2
4019	Front Driveshaft Spring Clip	5
4033A	M4 Upper Arm Adjuster Screw (Light)	2
4038	Centre Tensioner Sleeve	1
4039A	Diff Satellite Gear Shim (0.3mm)	4
4040	Diff Main Gear Shim (0.2mm)	2
4043	Topdeck Motormount Screw	2
4046	6x8x0.05mm Stainless Steel Shim	10
4047	3mm Shock Piston E-Clips	10
4049	5x7x0.1mm Stainless Steel Shim	2
4050	6x8x0.1mm Stainless Steel Shim	10
4110	Upper Rocker Mounting Shaft	2
4111	Upper Rocker Mounting Pin	2
4112	Centre Rocker Mounting Screw	2
4113	Lower Rocker Mount Screw	2
4114	Front Rocker Push Rod	1
4115	Rear Rocker Push Rod	1
4116	Layshaft	1
4117	Hub M3 Male Insert	2
4118	4.8mm Female Upper Suspension Ball Polished	10
4119	5.0mm Female Lower Suspension Ball Polished	10
4120	4.3mm Male Ball Stud (Medium) Polished	4
4121	4.3mm Male Ball Stud (Long) Polished	4
4123	Shock Shaft	2
4124	Anti-Roll Bar (1.0mm)	1
4125	Anti-Roll Bar (1.1mm)	1
4126	Anti-Roll Bar (1.2mm)	1
4127	Anti-Roll Bar (1.3mm)	1
4128	Front Bumper Support Stud	2
4129	Anti Roll Bar Adapter Shaft 1.0/1.1	2
4130	Anti Roll Bar Adapter Shaft 1.2/1.3	2
4131	Spool Outdrive	2
4132	Diff Outdrive	2
4133	Diff Output Shaft	2
4135	Front Driveshaft w/Pin	1
4136	Rear Driveshaft w/Pin	1

© RC MAKER

PART#	DESCRIPTION	PER PACK
4137	1.2mm Driveshaft E-Clips	10
4138	1.2mm Spring Steel Chassis	1
4139	6x8x0.2mm Stainless Steel Shim	10
BRASS		
5010	Front Weight Set (1L & 1R)	2
5011	Rear Weight Set (1L & 1R)	2
5014	Full Size Battery Weight Set (1F & 1R)	2
5016	Shorty Battery Weights Set (1F & 1R)	2
5018	Floating Electronics Plate Bulkhead	1
5019	Floating Electronics Plate Brass Plate	1
5019-C	Floating Electronics Plate Carbon Plate	1
5025	Brass Battery Hook (12g ea)	2
5026	Front Centre Weight (18g)	1
5027	Rear Centre Weight (18g)	1
BEARINGS		
6010	6x10x3mm Metal Shield	4
6013	5x8x2.5mm Metal Shield	2
6016	2x5x1.5mm Metal Shield	2
6017	2x5x2.3mm Metal Shield	4
6018	3x6x2.5mm Metal Shield	4
6019	5x11x4mm Metal Shield	2
6020	6x10x4mm Metal Shield	4
6021	3x7x3mm Metal Shield	2
FOAM		
7010	Soft Shock Bladder	4
7012A	Foam Bumper	1
7013	351 Bando Drive Belt	1
7014	351 Low Friction Bando Drive Belt	1
7020	351 Heavy Duty Bando Drive Belt	1
O-RINGS		
8010	Diff Outdrive Internal O-Ring	2
8011	Shock Collar O-Ring	4
8012	Shock Bottom O-Ring	4
8013	Main Diff O-Ring	1
8014	Diff Outdrive Pin Retainer O-Ring	2
8015	Layshaft Pulley O-Ring	1
8018	4.5x1.2mm O-ring	4
8019	3x1mm O-ring	2

© RC MAKER

PART#	DESCRIPTION	PER PACK
SCREWS		
9010	M2x6mm Cap Head	5
9011	M2x5mm Buttion Head	10
9014	M2.5x5mm Button Head	5
9016	M2.5x14mm Button Head	5
9017	M3x5mm Button Head	10
9018	M3x6mm Button Head	10
9019	M3x8mm Button Head	10
9020	M3x10mm Button Head	5
9021	M3x12mm Button Head	5
9022	M3x16mm Button Head	5
9025	M3x8mm Flat Head	5
9027	M3x3mm Grub Screw	10
9032	M3x5mm 110deg Flat Head	10
9033	M3x8mm 110deg Flat Head	10
9036	M3x6mm 110deg Flat Head	10
9037	M2x4mm Flat Head	5
9038	M2.5x4mm Button Head	10
9039	M4x6mm Grub Screw	5
9040	M2x4mm Button Head	5
SETS		
10010	Floating Electronics Plate Set - Brass	
10011	Floating Electronics Plate Set - Carbon	
10021	4.8mm Turnbuckle Upper Arm Set (Bronze Alu)	
10022	4.8mm Turnbuckle Upper Arm Set (Titanium)	
10100	LW-LF Inner Front Joint Set	
10101	LW-LF Inner Rear Joint Set	
10102	LF-LW Complete Front Driveshaft Set	
10103	LW-LW Complete Rear Driveshaft Set	
10104	Gear Diff Set	
10105	XS Linear Shock Set (2)	
10106	SP2 Standard Driveline Bearing Set	
10107	SP2 Premium Ceramic/ABEC 7 Steel Bearing Set	
10108	SP2 Lower Chassis Screw Set	
10109	SP2 Upper Screw Set	
10110	Centre Pulley Tensioner Set	

© RC MAKER

PART#	DESCRIPTION	PER PACK
SPRINGS		
11013	XS Shock Spring 4.75 Coils	2
11014	XS Shock Spring 4.50 Coils	2
11015	XS Shock Spring 4.25 Coils	2
11016	XS Shock Spring 4.0 Coils	2
11017	XS Shock Spring 3.75 Coils	2
TITANIUM		
14101	3x28mm Titanium Turnbuckle	2
14102	3x45mm Titanium Turnbuckle	2
14202	Titanium Arm Adjuster Screw	4
14203	Titanium Long Link Ball-stud (+2mm)	2
14204	Titanium Long Link Ball-stud (0mm)	2

© RC MAKER