21 XT-R3F

Assembly & Maintenance Manual



Schumacher

www.racing-cars.com

S1039



Schumacher

21 XT-R3E

IMPORTANT SAFETY NOTES

1. This product is not suitable for children under 14 years of age unless supervised by an adult.
2. Select an area for assembly that is away from reach of small children. The parts are small and can be swallowed by children causing choking and possible internal injuries.
3. Shock fluids, grease and adhesives should be kept out of children's reach. They are not toxic, but were not intended for human consumption.
4. Exercise care when using any hand tools, sharp instruments and power tools during construction.
5. Carefully read all manufacturers warnings and cautions for any glues or paints that may be used for assembly purposes.

Do not use excessive force when tightening the self-tapping screws, or you may strip the thread in the plastic. It is recommended to stop tightening it when the threaded part on the screw goes into the plastic part and you feel some resistance from the tightening. Screws can be made easier to tighten if a drop of oil is used.

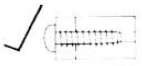

Good

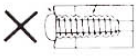

Over tighten and may strip the thread in the plastic

ADDITIONAL ITEMS REQUIRED

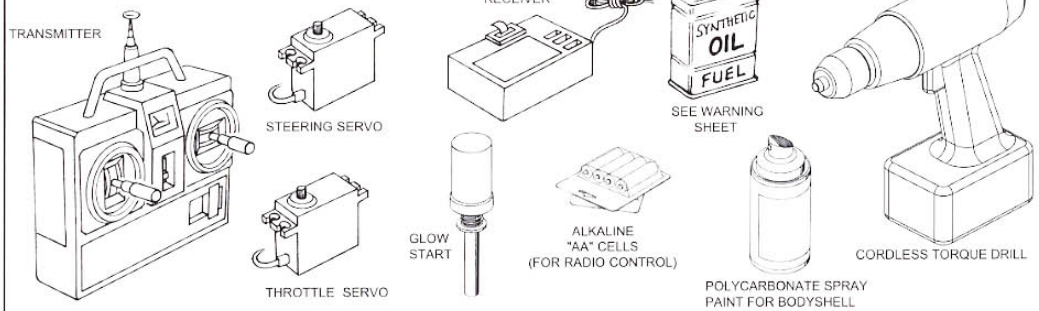

FOR BEST PERFORMANCE, IT IS VERY IMPORTANT THAT GREAT CARE IS TAKEN TO ENSURE THE FREE MOVEMENT OF ALL PARTS.

TOOLS REQUIRED

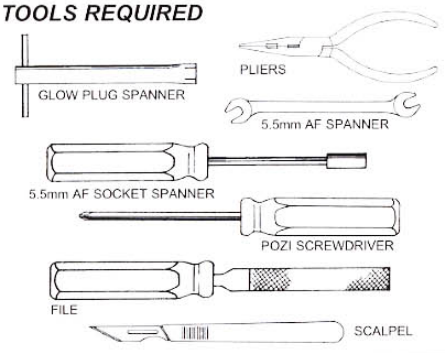

RULER *INCHES & MILLIMETRES*

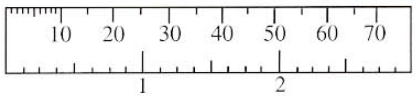

In line with our policy of continous development the exact specification of the kit may vary.
In the unlikely event of any problems with your kit please contact the model shop where you purchased it.

Schumacher

21 XT-R 3E

1 SERVO SAVER ASSEMBLY

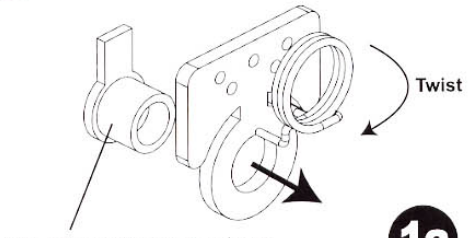

N.B. Choose the correct horn to suit your servo spline.

1a

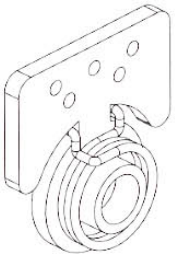

RADIO INSTALLATION

A	X6	M3 Nyloc Nut
B	X6	M3 Steel Washer
C	X4	M3 x 8 Pan Head
D	X2	M3 x 12 Pan Head

2

N.B. Ensure servo is at neutral.

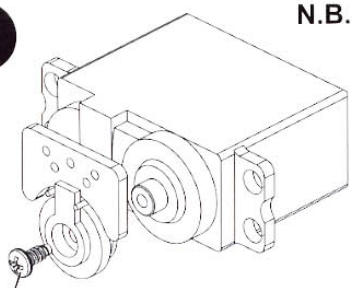

Servo & Screw supplied with Radio Equipment.

2a

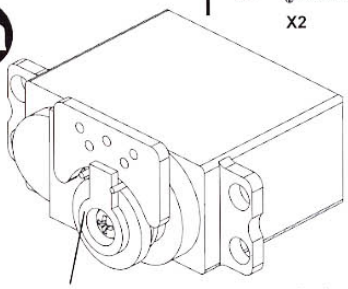

Servo Saver must be vertical, when the radio is switched on and the transmitter set to steer straight ahead. This can be adjusted later.

3

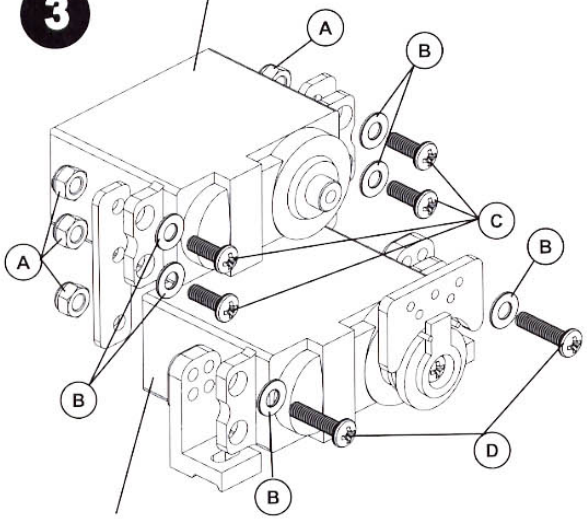

Steering Servo

3a

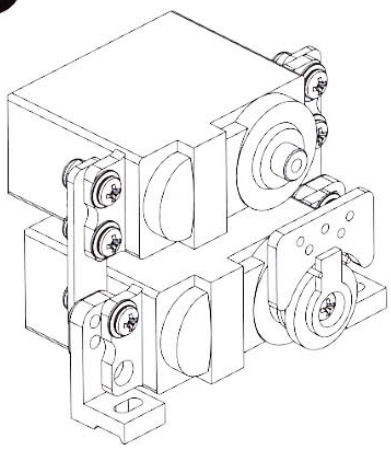

Schumacher

21 XT-R 3E

BODYSHELL MOUNTING

A	X3	M3 Nyloc Nut
B	X8	No4 3/8 Pan Head
C	X3	M3 x 10 Pan Head
D	X4	M3 x 3 Grub (set) Screw
E	X4	"R" Clips

1

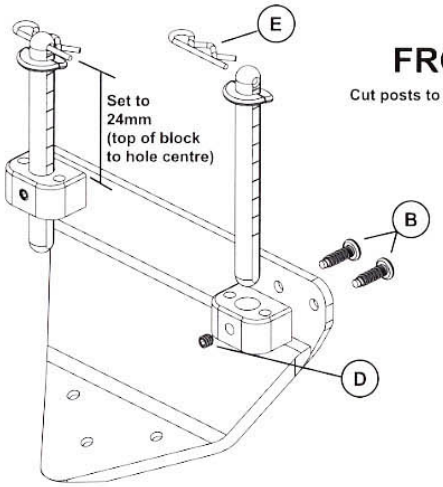

FRONT

Cut posts to appropiate length.

1a

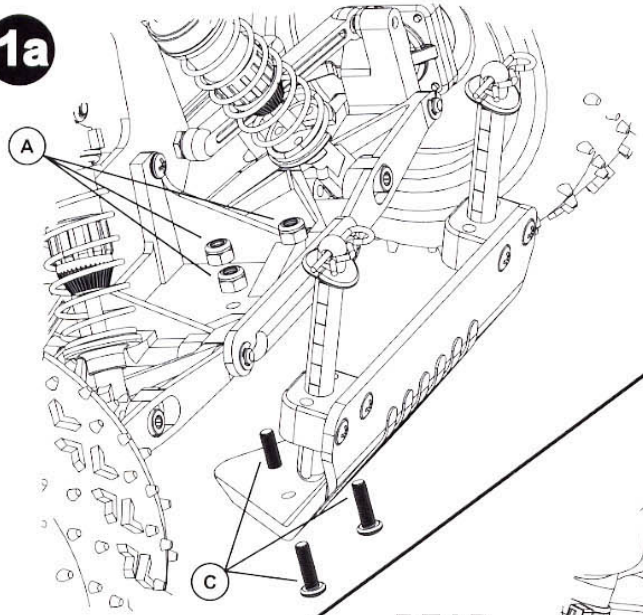

2a

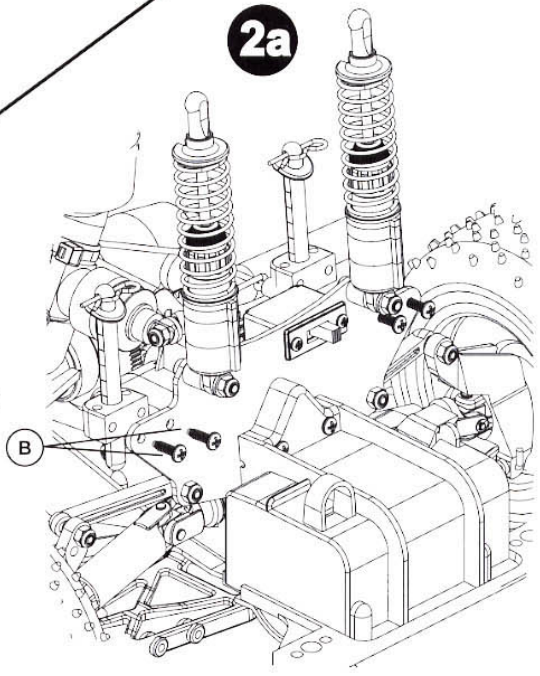

REAR

2

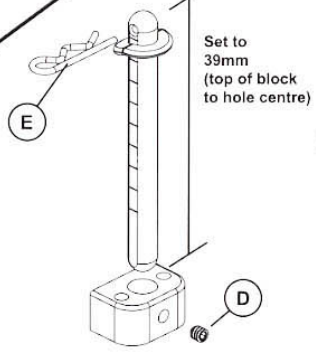

2b

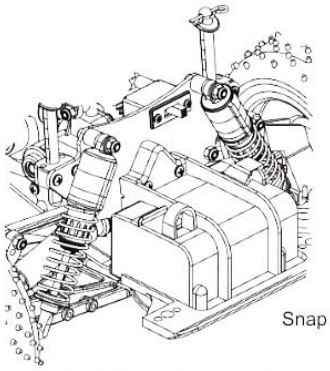

Snap shocks back onto ball stud in wishbone.

BODYSHELL MOUNTING

FITTING THE WHEELIE BAR

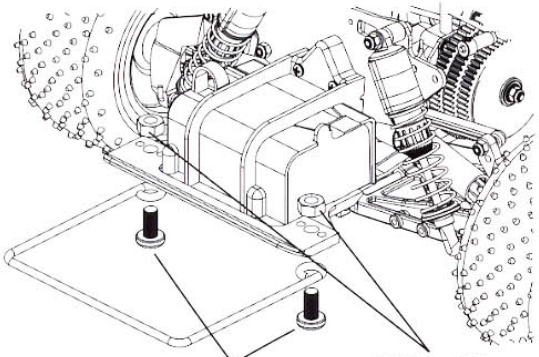

M6 x 12 Pan Nylon

M6 Nylon Nut

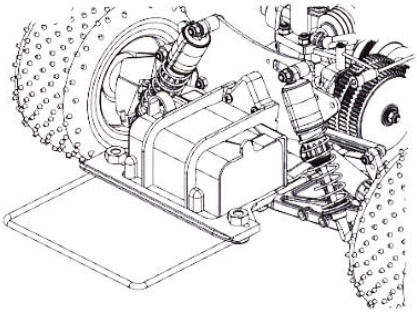

CUTTING OUT:
Carefully cut away the shaded areas. Use a file or abrasive paper to smooth the edges. Ragged edges and score marks can cause the body to crack or split.

PAINTING:
First wash the body in warm soapy water to remove any oil or dirt. Rinse well. Paint the inside of the bodyshell. You can obtain a colour scheme by masking a section with tape, paint the clear area, then remove tape and paint remainder. Apply the darkest colour first. Use decals to finish your body.

WING MOUNTING: Mount the wing using servo tape or nuts and bolts.

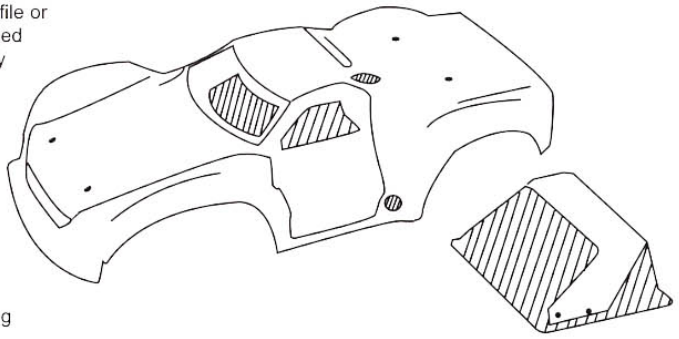

WARNING

Please read this.....



The following information is very important to the performance and reliability of your Schumacher Nitro Car please read it!

1. Read the instructions fully.

2. Use good quality fuel with synthetic oil such as Dynaglow 10/16 or Blue Thunder 10/16. These are the only fuels we recommend. We do not recommend castor oil based fuels, as it leaves a "sticky residue" which can cause the starter one way bearing to slip.

3. NEVER run the engine without the air filter fitted.

4. Don't run the car at full throttle with the rear wheels off the ground, the engine WILL blow up in a matter of seconds.

5. Learn to use your power with respect. Very few surfaces can cope with full power. If you use full power everywhere you WILL break things!

6. DIFFERENTIAL DAMAGE will be caused by too much wheelspin. Control the power and regularly do the DIFF CHECK. (see manual)

7. Always ensure the transmitter & receiver batteries are fully charged before use.

8. Set the torque on your cordless drill to the lowest possible setting, that will turn the engine over.

9. Always ensure that all nuts and screws are tight.

10. ALWAYS ensure gear mesh adjustment is correct.

11. Run in a new engine by using a rich fuel mixture, to ensure plenty of lubrication, and use no more than half throttle for the first 2 or 3 tanks of fuel.

GUARANTEE:
All parts are guaranteed against defect in manufacture. Conditions of use of this product are out of our control and therefore we cannot guarantee parts against failure in use. This is an ultra high performance car and used without due respect to the conditions, will result in failure. If you have any problems with this product your first point of contact should be the place of purchase.

Schumacher

21 XT-R 3.5

STARTING THE ENGINE

1 SET UP DRILL

After charging your drill, insert the "e-start" adaptor (ball end out) and tighten the chuck.
ENSURE THE DRILL ROTATES CLOCKWISE.

Set the torque setting to the lowest possible setting, that will turn the engine over.

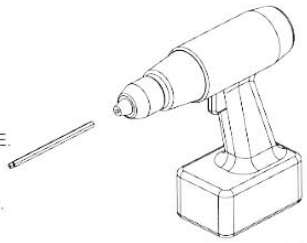

2 FILL FUEL TANK

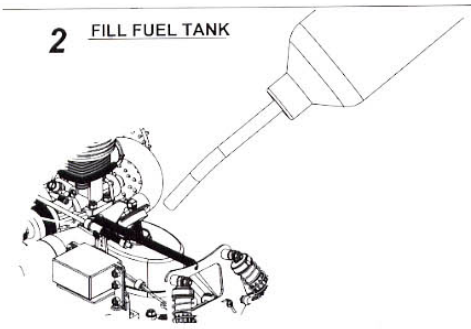

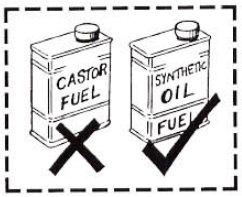

WE STRONGLY RECOMMEND DYNA-GLOW 10/16 OR BLUE THUNDER 10/16 FUEL

3 PRIMING ENGINE

TURN ON TRANSMITTER.
SWITCH ON RECEIVER.

PRESS DOWN ON EXHAUST PIPE TO CLOSE UP

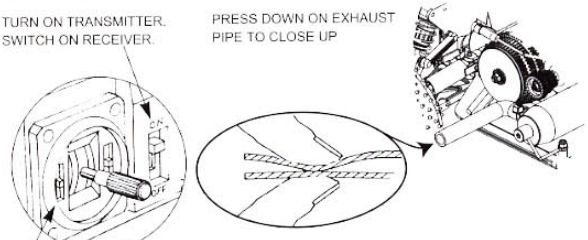

ENSURE THROTTLE TRIM IS AT NEUTRAL

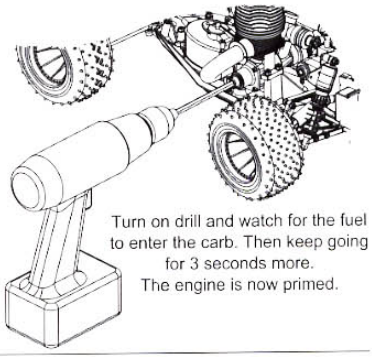

Turn on drill and watch for the fuel to enter the carb. Then keep going for 3 seconds more.
The engine is now primed.

4 STARTING ENGINE

HOLD GLOW START ONTO PLUG

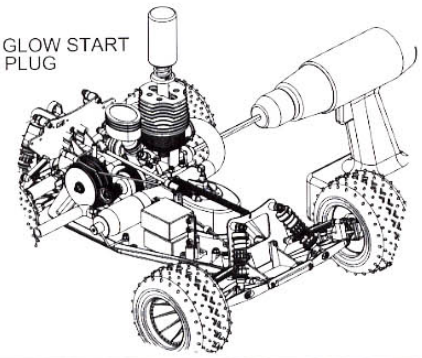

Turn on drill until the engines starts!

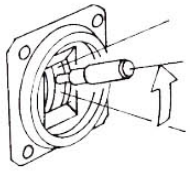

Pull out drill and gently rev the engine, then remove the glow clip.

5 STOPPING ENGINE

WARNING:

ENGINE AND TUNE PIPE WILL BE VERY HOT DO NOT TOUCH FOR SEVERAL MINUTES

ENSURE ENGINE IS AT IDLE BEFORE STOPPING.
Stop engine by blocking exhaust.

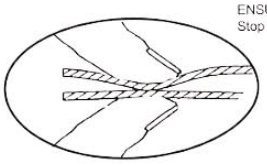

ENGINE SETTINGS

Schumacher

21 XT-R 3E

SETTING IDLE SPEED

TRANSMITTER - ZERO/NEUTRAL





ENGINE STALLS = SCREW IN THROTTLE STOP SCREW TO INCREASE REVS



CAR DOES NOT MOVE AND SOME SMOKE = OK

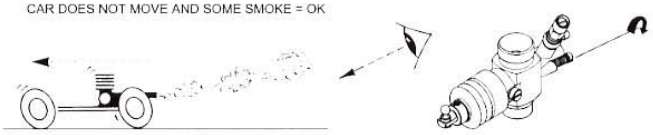

CAR EDGES FORWARD = UNSCREW THROTTLE STOP SCREW TO LOWER REVS

IDLE SPEED SETTING

0.25mm to 0.50mm Slide Open

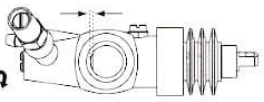

SET IDLE SPEED AS HIGH AS POSSIBLE WITHOUT CAR EDGING FORWARD

SETTING LOW SPEED MIXTURE

TRANSMITTER - STOP-GO (MAX ACCELERATION)

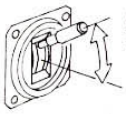

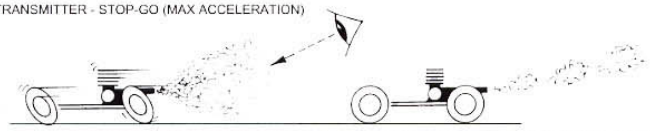

TOO MUCH SMOKE AND SLOW ACCELERATION = SCREW IN LOW SPEED MIXTURE SCREW (TOO RICH)

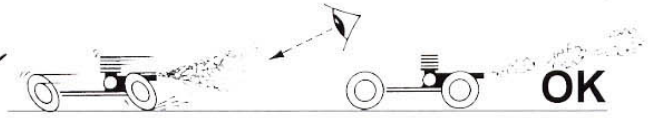

SOME SMOKE AND GOOD ACCELERATION = OK

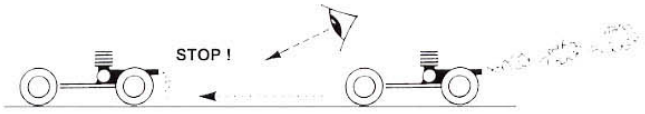

CAR EDGES FORWARD AND THEN STALLS = UNSCREW LOW SPEED MIXTURE SCREW (TOO LEAN)

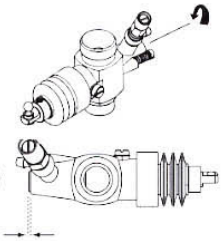

0.40mm in, to 0.40mm out from flush

LOW SPEED MIXTURE SETTING



SETTING HIGH SPEED MIXTURE

TRANSMITTER - MAX FULL SPEED

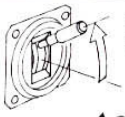

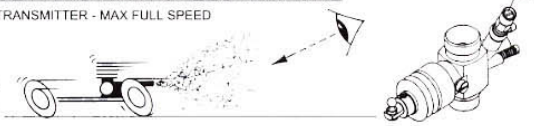

TOO MUCH SMOKE AND SLOW SPEED = SCREW IN HIGH SPEED MIXTURE SCREW (TOO RICH)



SOME SMOKE AND GOOD SPEED = OK

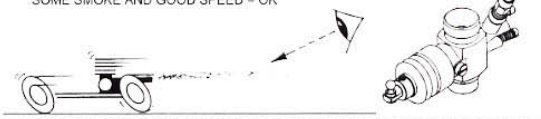

TOO LITTLE SMOKE AND SLOW SPEED = UNSCREW HIGH SPEED MIXTURE SCREW (TOO LEAN)

HIGH SPEED MIXTURE SETTING

1½ Turns Open to 2½ Turns Open from fully closed.

WARNING: IF CAR BEGINS TO LOSE PERFORMANCE AFTER A FEW MINUTES IT IS PROBABLY **OVERHEATING** AND YOU **MUST STOP** AND UNSCREW HIGH SPEED MIXTURE SCREW 90°

N.B. The settings given are for a starting point only.
SMALL adjustments may be required depending on conditions.

DO NOT ALLOW THE NOISE TO ANNOY OTHERS
DO NOT OPERATE THE "CAR" ON THE PUBLIC HIGHWAY
DO NOT OPERATE THE "CAR" IN A CONFINED SPACE OR CROWDED AREA
DO NOT RUN ENGINE WITHOUT AIR FILTER - SERIOUS DAMAGE WILL RESULT
DO NOT ALLOW THE TRANSMITTER OR RECEIVER BATTERIES TO RUN FLAT

Schumacher

21 XT-R

TROUBLE SHOOTING

THE FOLLOWING INFORMATION WILL HELP SOLVE ANY PROBLEMS WHEN RUNNING AND MAINTAINING YOUR CAR

PROBLEM	CAUSE	REMEDY
ENGINE DOES NOT START	FUEL TANK EMPTY, ENGINE NOT PRIMED	FILL TANK AND REPRIME ENGINE
	FLAT GLOW BATTERY OR DEAD GLOW PLUG	RECHARGE BATTERY AND/OR REPLACE PLUG
	CLOGGED AIR FILTER	CLEAN OR REPLACE AIR FILTER
	OVER PRIMED, CYLINDER FLOODED WITH FUEL	REMOVE GLOW PLUG THEN TURN ENGINE OVER TO DISCHARGE FUEL
	INCORRECT CARBURETTOR ADJUSTMENT	CHECK SETTINGS
	INCORRECT LINKAGE ADJUSTMENT	RE ADJUST LINKS WITH SERVO IN NEUTRAL SEE MANUAL
	WORN ENGINE - PISTON LINER	REPLACE PISTON LINER
ENGINE STALLS	FUEL TANK EMPTY	FILL FUEL TANK
	CLOGGED AIR FILTER	CLEAN OR REPLACE AIR FILTER
	INCORRECT CARBURETTOR ADJUSTMENT	RE ADJUST CARBURETTOR SETTINGS
	ENGINE OVER HEATING	ALLOW ENGINE TO COOL DOWN AND OPEN HIGH SPEED MIXTURE SCREW 90°
POOR ENGINE RESPONSE	INCORRECT CARBURETTOR ADJUSTMENTS	RE ADJUST CARBURETTOR SETTINGS
	FUEL TANK PRESSURE PIPE LOOSE, DETACHED OR DAMAGED OR BLOCKED	REPLACE OR REFIT PRESSURE PIPE
	WORN ENGINE - PISTON LINER	REPLACE PISTON LINER
POOR CAR CONTROL	WEAK BATTERIES IN TRANSMITTER	RECHARGE OR REPLACE BATTERIES
	WEAK RECEIVER BATTERIES	RECHARGE OR REPLACE BATTERIES
	TRANSMITTER AERIAL NOT FULLY EXTENDED	EXTEND AERIAL
	POOR ADJUSTMENT OF LINKS	RE-ADJUST LINK TO INSTRUCTIONS

RUNNING ENGINE IN FROM NEW

TO ENSURE YOUR ENGINE HAS A LONG LIFE THE ENGINE NEEDS TO BE "RUN IN" BEFORE BEING "RACED". RUN THE CAR FOR 2 OR 3 TANK FULLS, AT A RICH CARB SETTING ON HALF THROTTLE, DO NOT USE FULL THROTTLE

WARNING:

THE LIMITED SLIP DIFFERENTIAL DESIGN CAN BE DAMAGED BY CONTINUOUSLY SPINNING ONE REAR WHEEL OR BY SPINNING THE CAR ROUND IN " DONUTS" FOR TOO LONG. THE DIFFERENTIAL WILL ALSO BE DAMAGED IF IT IS ALLOWED TO SLIP WHILE DRIVING THE CAR. IF ANY SLIP OCCURS, STOP AND ADJUST IT BEFORE YOU DAMAGE IT

IMPORTANT - REGULAR MAINTENANCE

CHECK DIFFERENTIAL ADJUSTMENT, CHECK ALL SCREWS ARE TIGHT, CHECK GEAR MESH ADJUSTMENT



Schumacher

21 XT-R 3.0

SHOCK ASSEMBLY

1

USE a scapel to cut away from sprue.

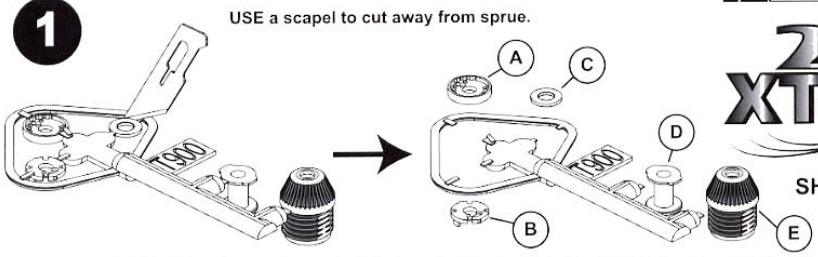

2

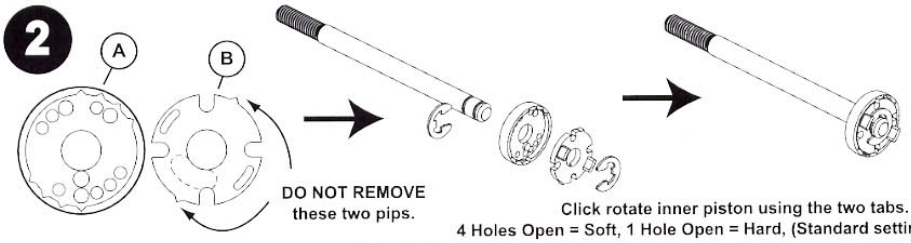

DO NOT REMOVE these two pips.

Click rotate inner piston using the two tabs.
4 Holes Open = Soft, 1 Hole Open = Hard, (Standard setting = 4 Holes)

3

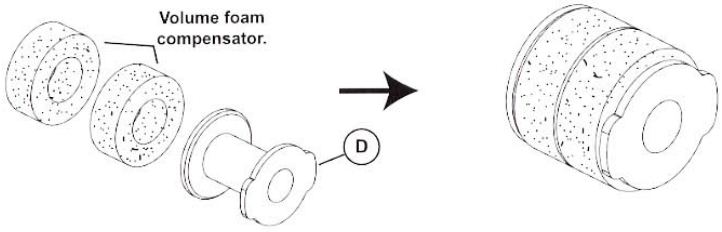

4

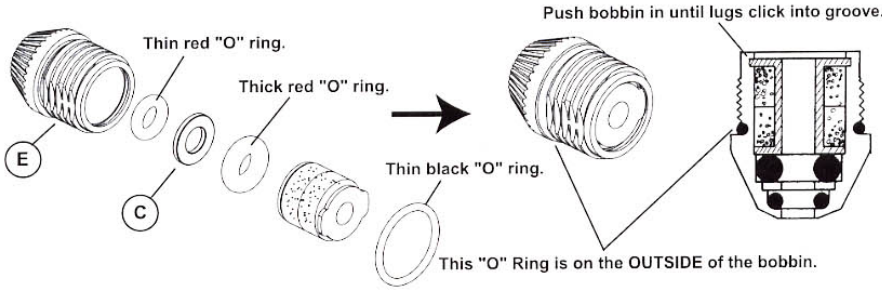

5



Schumacher

21 XT-R 3E

SHOCK ASSEMBLY

6

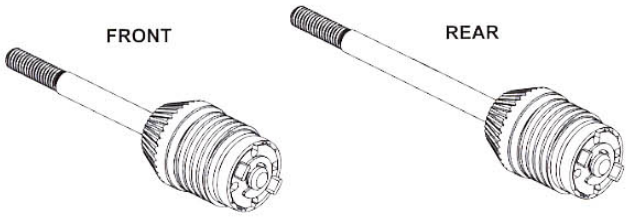

7



USE 70 Weight Oil as standard.

8

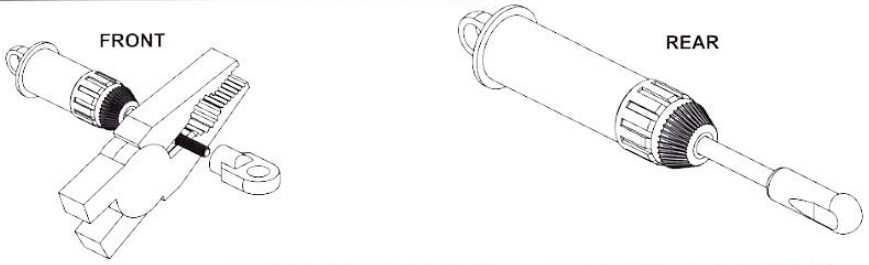

9

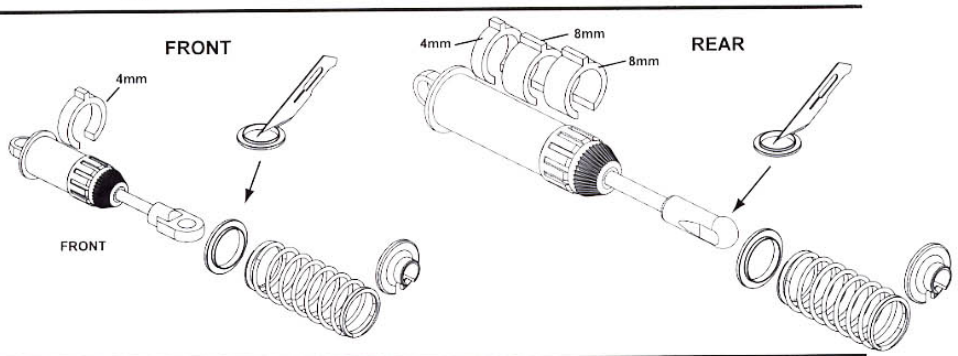

10

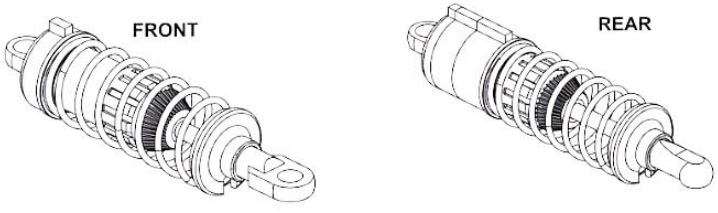

Schumacher

21 XT-R

DIFFERENTIAL BUILD AND SETTINGS

1

ONLY USE SILICONE GREASE Axle grease will destroy diff action.

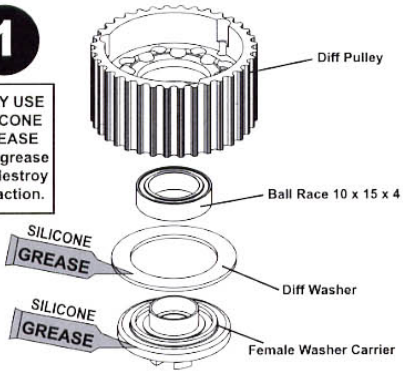

2

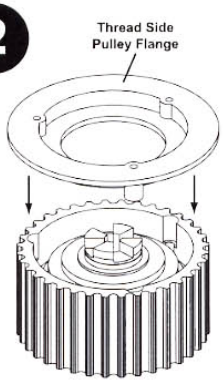

3

ONLY USE SILICONE GREASE Axle grease will destroy diff action.

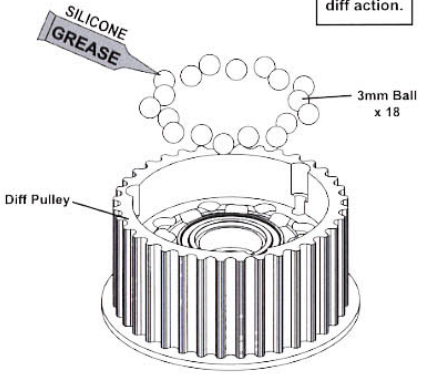

4

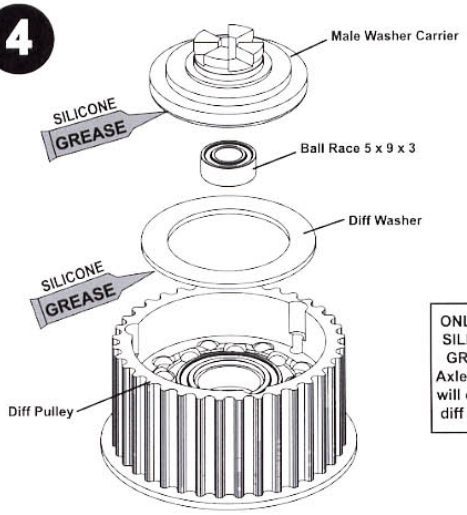

ONLY USE SILICONE GREASE Axle grease will destroy diff action.

5

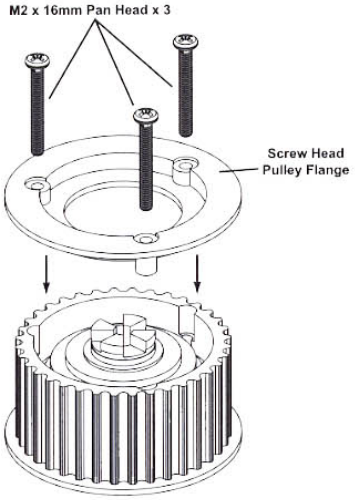

6

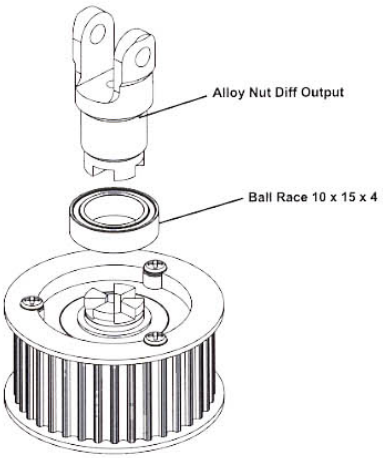

Schumacher

21 XT-R 3.5

DIFFERENTIAL BUILD AND SETTINGS

7

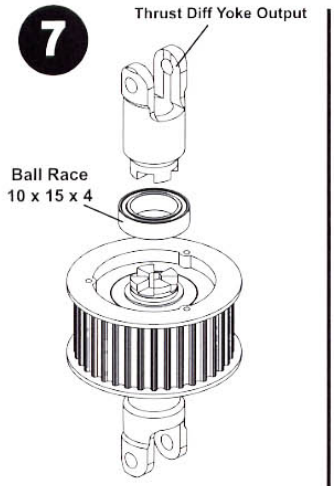

8

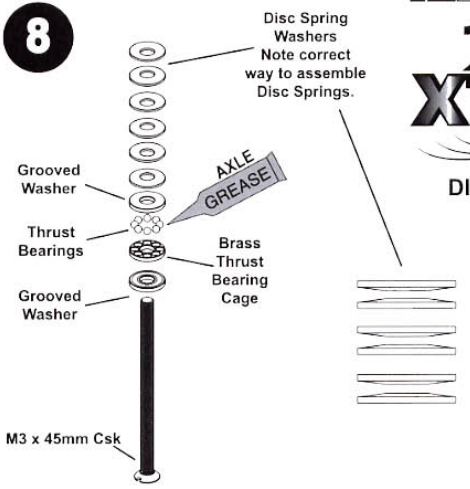

ONLY USE AXLE GREASE

9

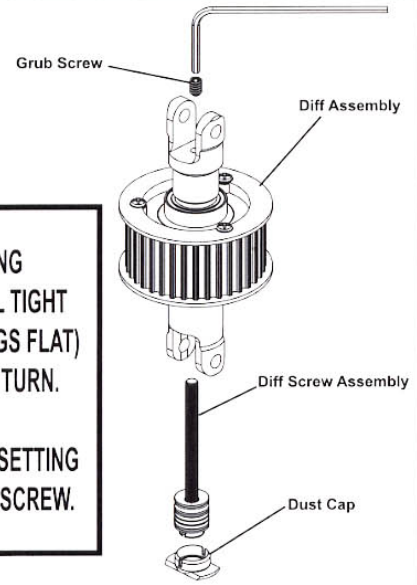

DIFF SETTING
SCREW IN UNTIL TIGHT
(ALL DISC SPRINGS FLAT)
THEN UNDO ¼ TURN.

THEN LOCK THE SETTING
WITH THE GRUB SCREW.

10

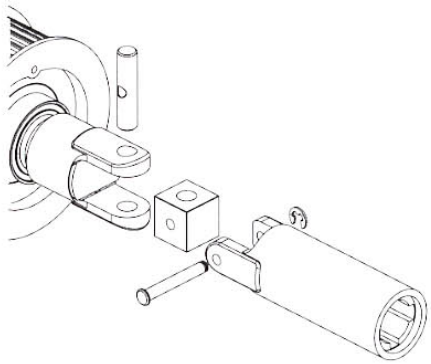

DIFFERENTIAL CHECK

1. Hold the car down so that the chassis touches the ground.
2. Turn the large (1st gear) spur and check that at least one rear wheel turns.
3. GEAR MUST NOT TURN WITHOUT A WHEEL TURNING.
4. See section 9 for diff setting.
5. Only tighten diff by 1/4 of a turn at a time.

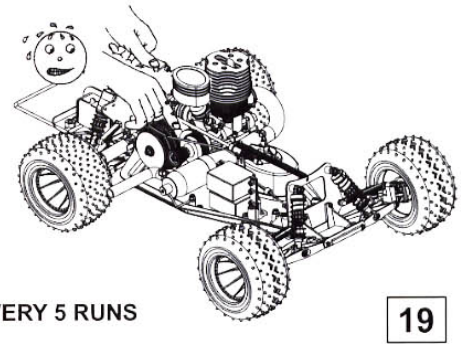

IMPORTANT TEST DIFF PRIOR TO USE AFTER EVERY 5 RUNS

Schumacher

21 XT-R 3E

RADIO INSTALLATION

A	X2	M3 Nyloc Nut
B	X2	M3 Steel Washer
C	X1	Collar & Grub (set) Screw
D	X2	M3 x 12 Csk Head

4

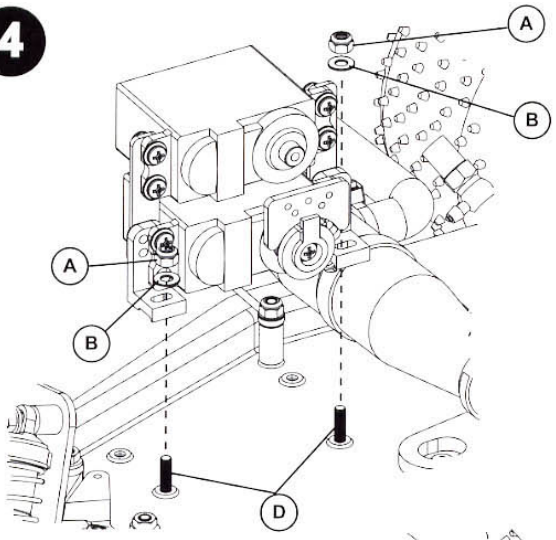

4a

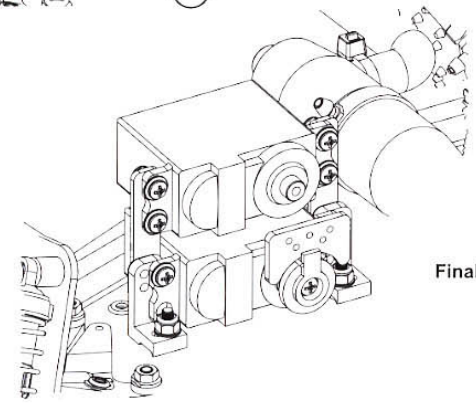

Final Assembly

FIT STEERING LINKAGE

5

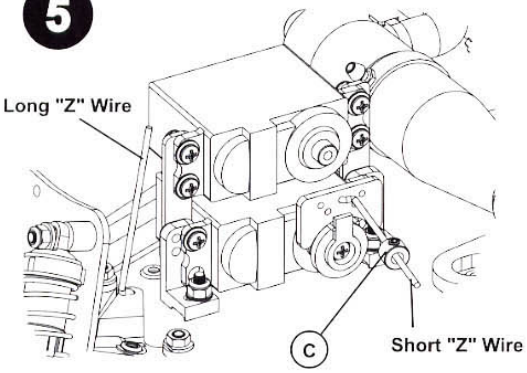

5a

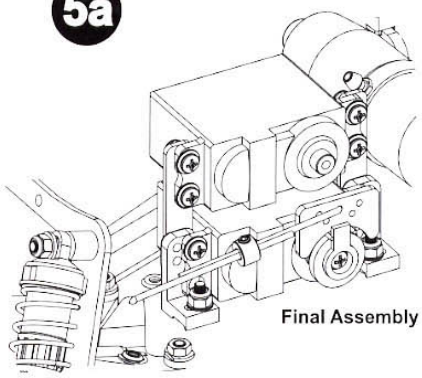

Final Assembly

Check the servo saver is vertically upright at neutral. Adjust link length so wheels are pointing straight ahead at neutral. Then tighten grub screw.

Schumacher

21 XT-R 3E

3E~XT-R (TT)
TRANSMISSION
ASSEMBLY

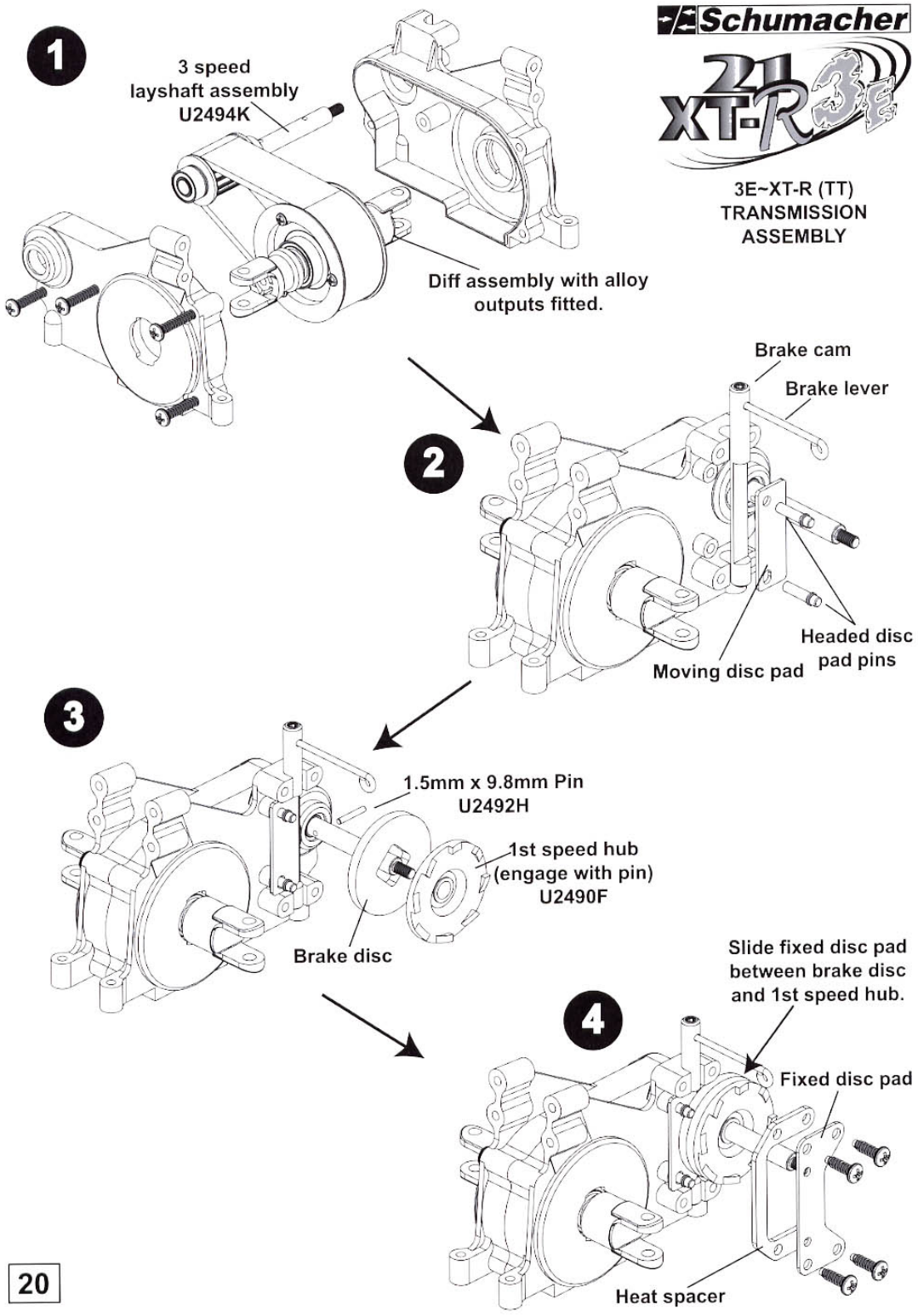

NOTE

IF YOUR CAR IS FITTED WITH A LARGE CONE SPRING ON 1ST GEAR DO NOT FIT THE SPRING WHEN YOU RE-BUILD THESE NEW GEARS.

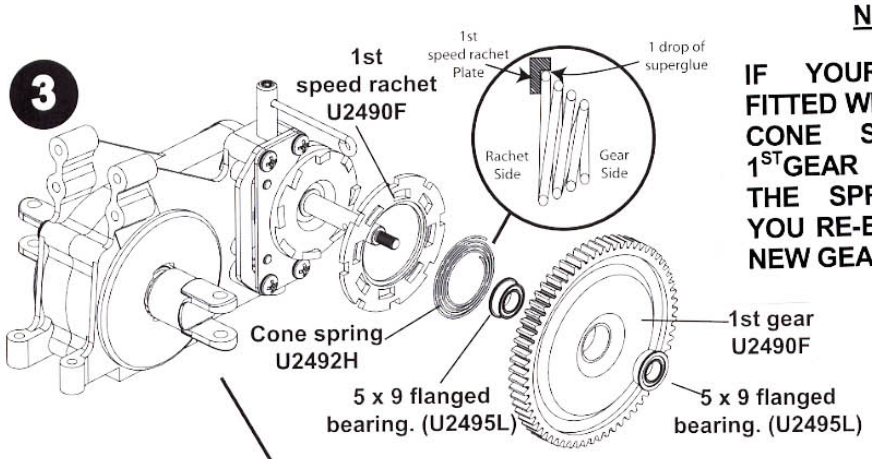

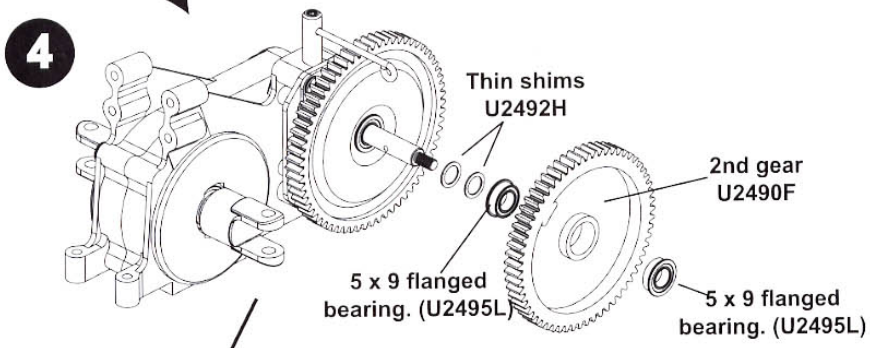

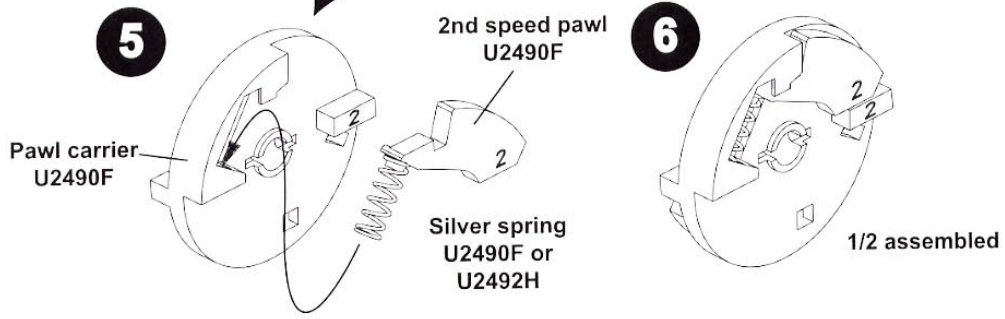

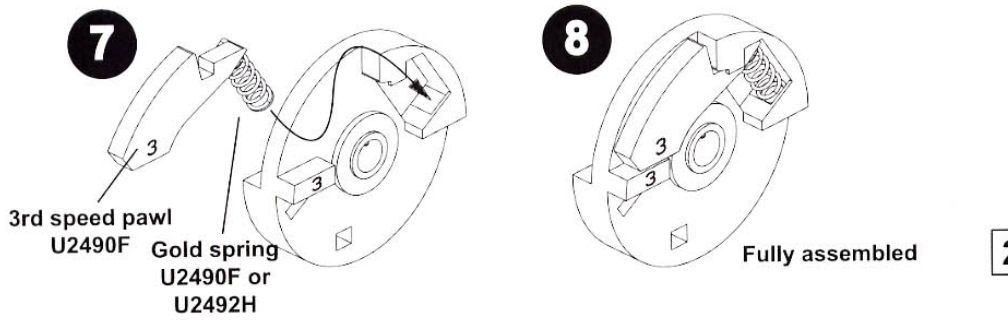

Schumacher

3E~XT-R (TT)
TRANSMISSION
ASSEMBLY

9

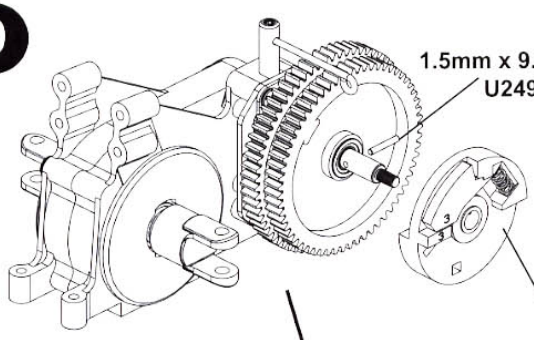

Assembled Pawl Carrier
(Engage with Pin)

10

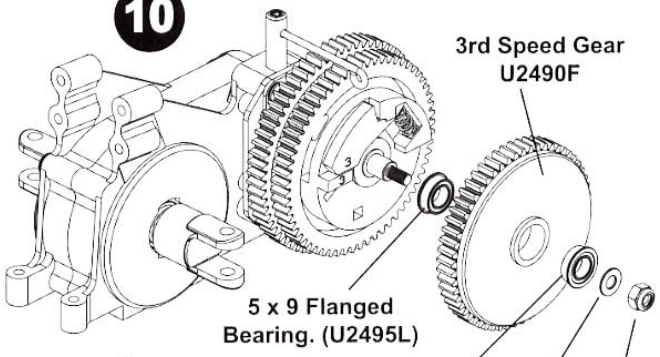

11

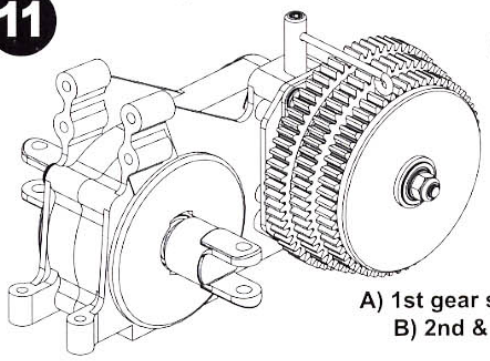

FINAL ASSEMBLY
NOTE:
A) 1st gear should click on reverse rotation.
B) 2nd & 3rd gears should spin freely.

Schumacher

21 XT-Race

Thunder Tiger Pro 21 Engine Parts

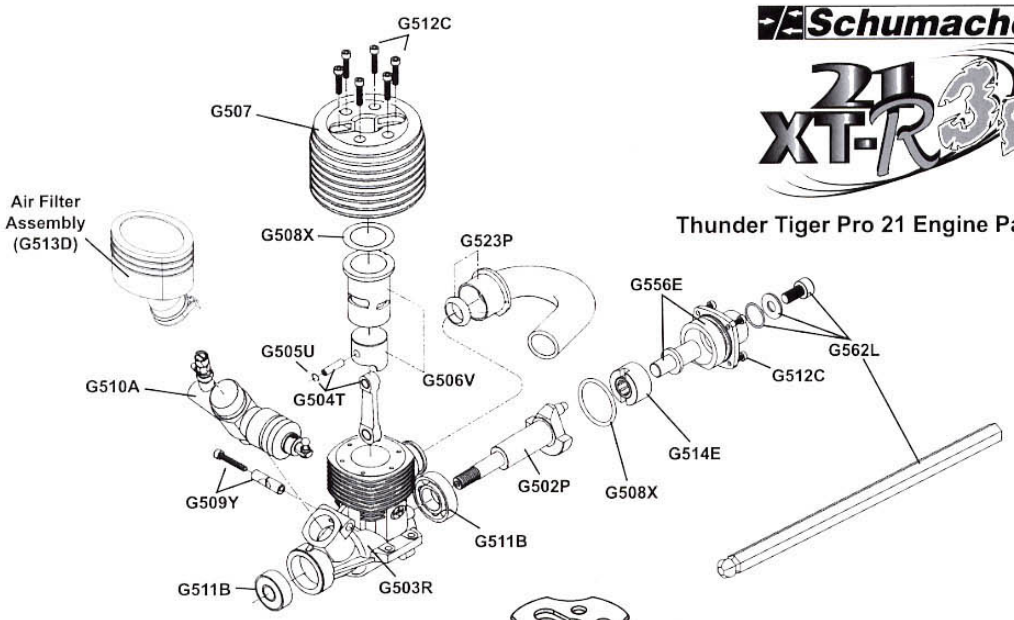

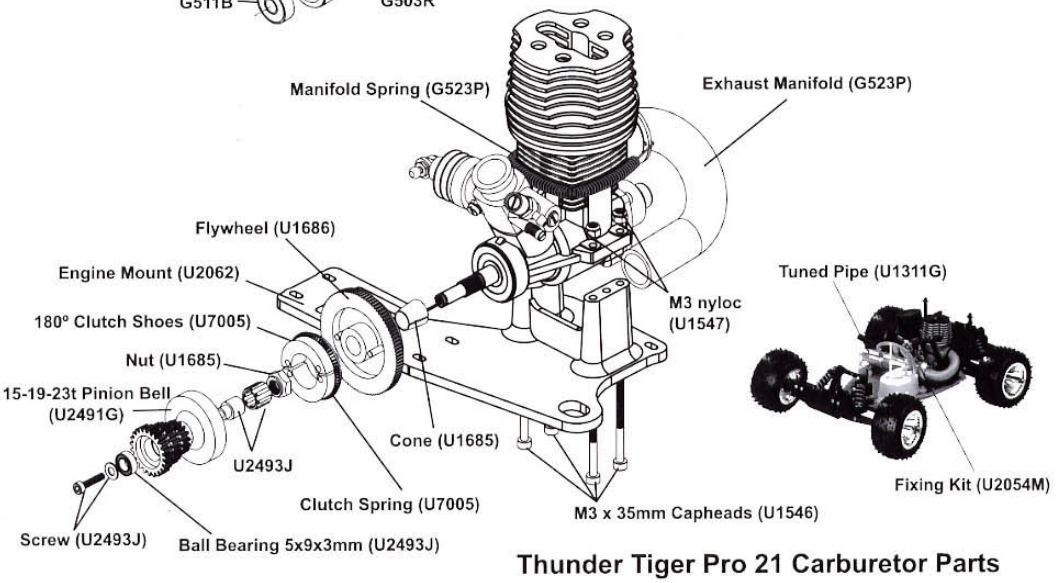

Thunder Tiger Pro 21 Carburetor Parts

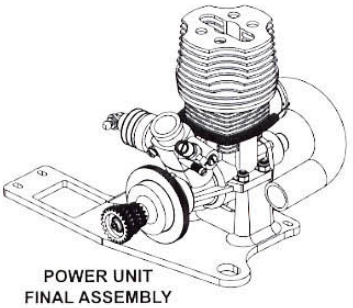

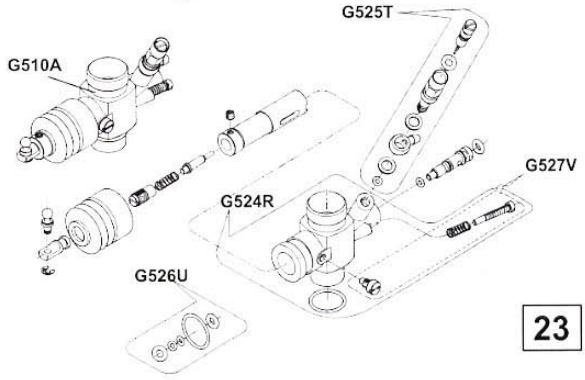

Schumacher

21 XT-R

RADIO INSTALLATION

6

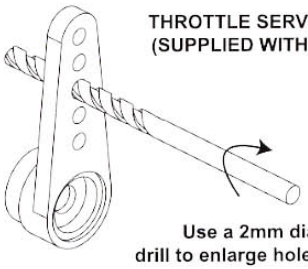

THROTTLE SERVO HORN
(SUPPLIED WITH RADIO)

Use a 2mm diameter
drill to enlarge hole if required.

A Collar & Grub (set) Screw X1

6a

BRAKE LINKAGE

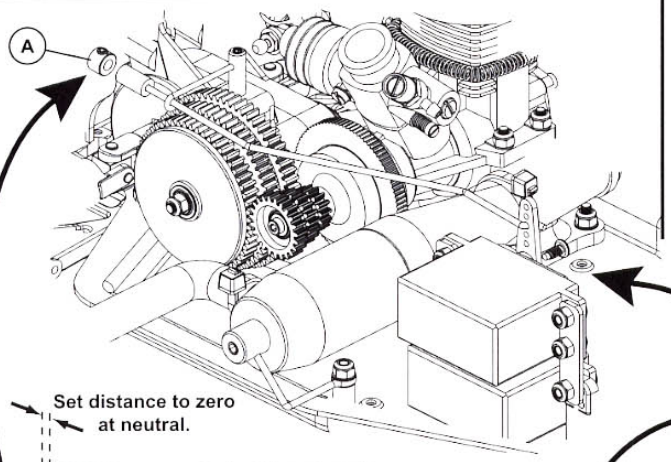

Set distance to zero at neutral.

Cut a 10mm length of fuel tubing.

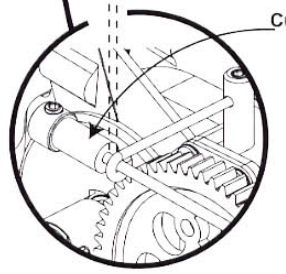

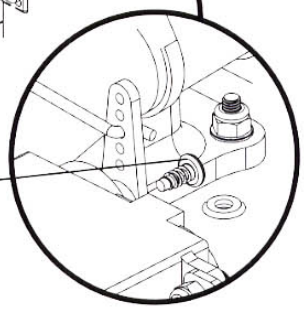

Screw supplied with Radio Equipment. Fit servo horn on vertical when servo is set to neutral.

N.B. Check that when you move the throttle stick backwards, the brake engages and the rear wheels lock. At neutral position the wheels should turn freely.

7

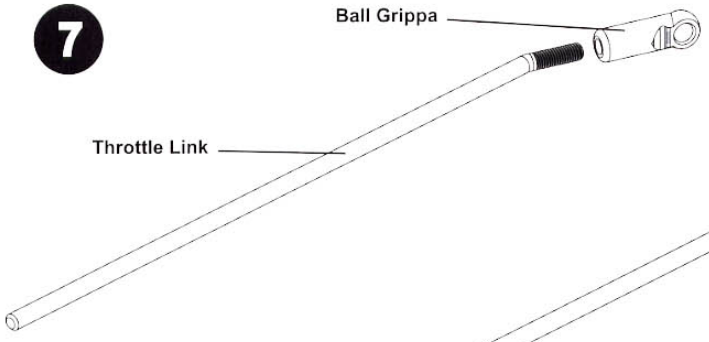

7a

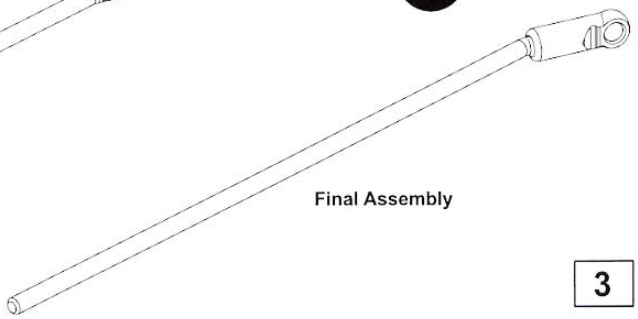

Final Assembly

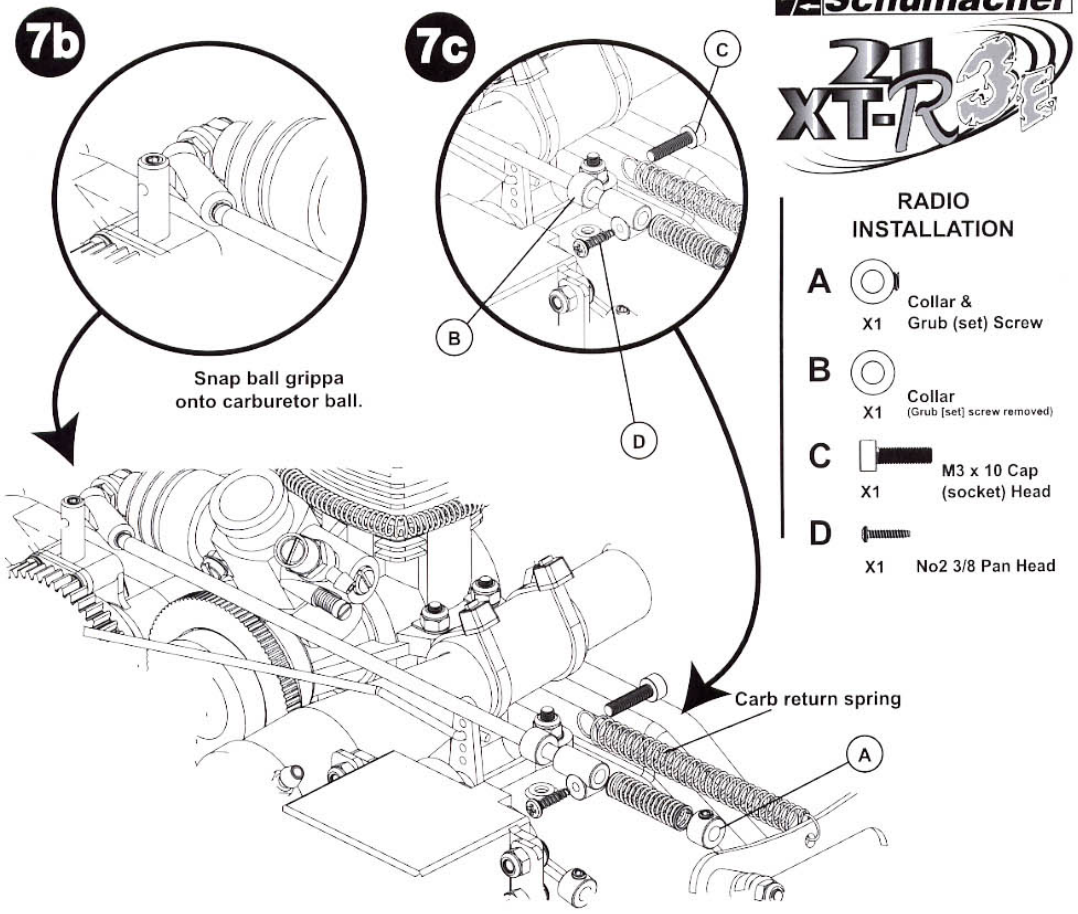

Schumacher

21 XT-R 3E

RADIO INSTALLATION

A — X1 — Collar & Grub (set) Screw

B — X1 — Collar (Grub [set] screw removed)

C — X1 — M3 x 10 Cap (socket) Head

D — X1 — No2 3/8 Pan Head

Look at the carburetor slide position. When set according to fig.8, at neutral the carb is at the idle setting (see Page 14). At full throttle the carburetor should be wide open.

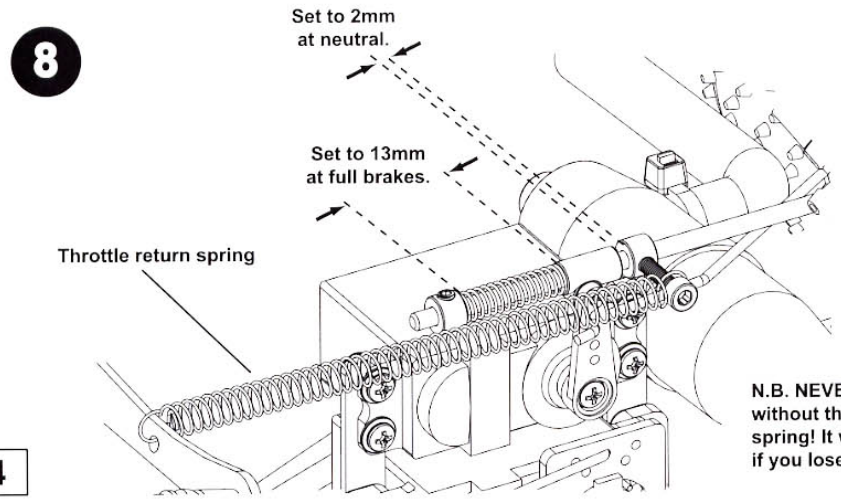

N.B. NEVER run the car without the throttle return spring! It will close the throttle if you lose radio power.

9

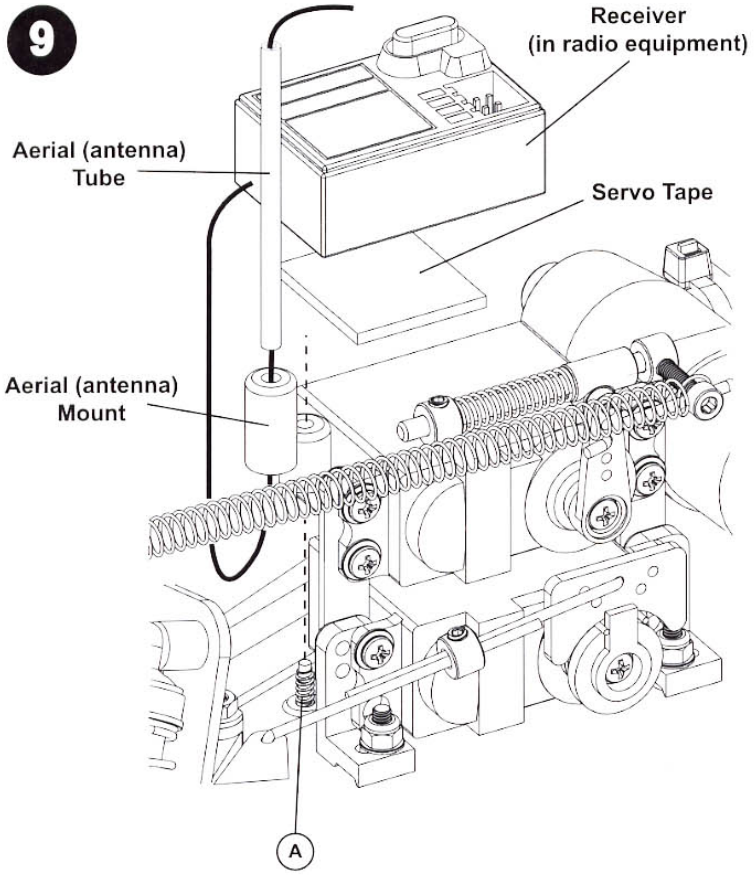

Schumacher

21 XT-R 3E

RADIO
INSTALLATION

A

X1 No4 3/8 Csk Head

9a

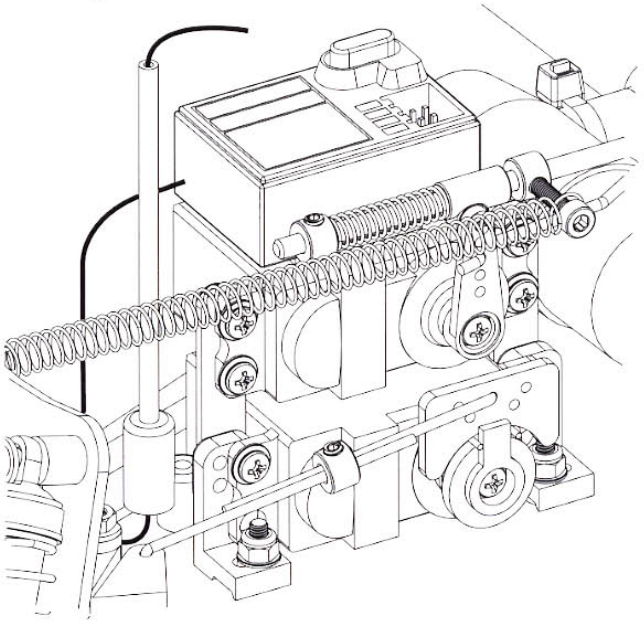

Final Assembly

Schumacher

21 XT-R 3E

RADIO INSTALLATION

10

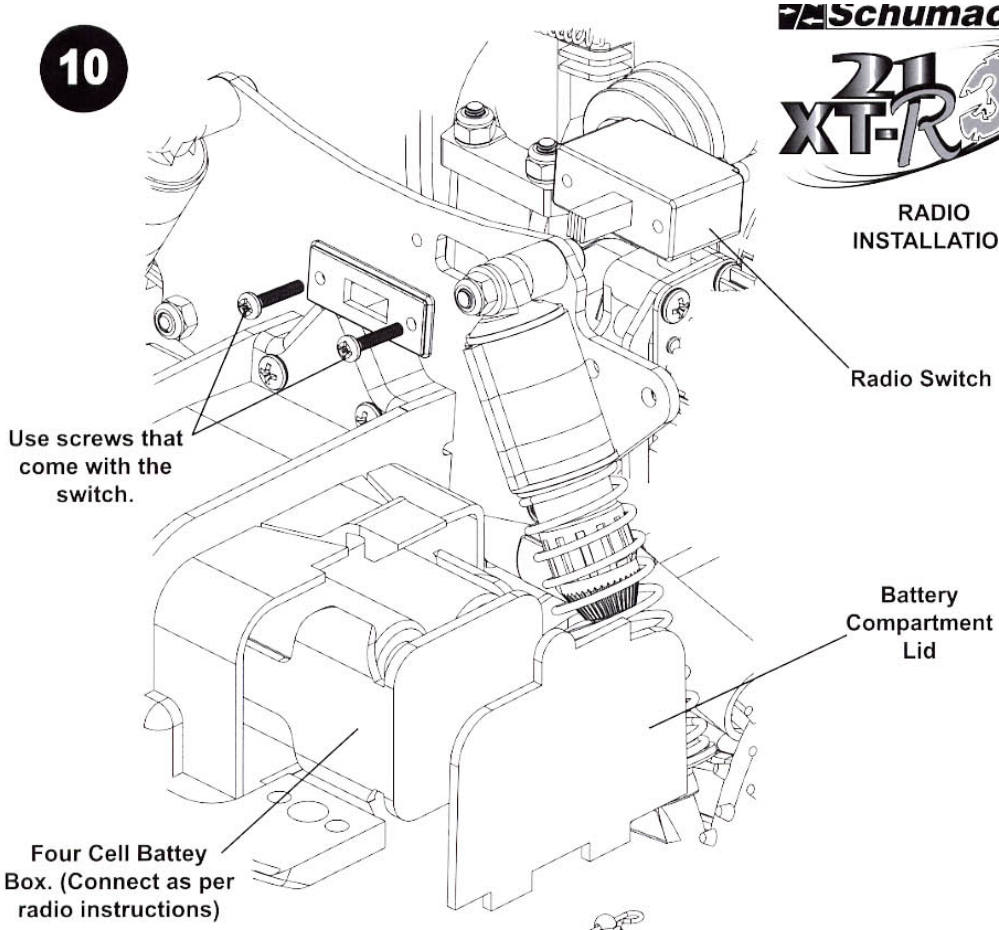

10a

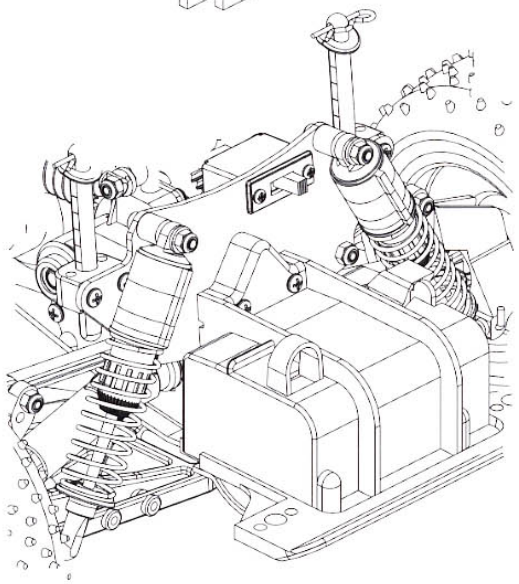

Final Assembly

Schumacher

21 XT-R3E

FUEL TANK ASSEMBLY

A X1 No4 1/4 Pan Head

B X1 No4 3/8 Pan Head

1

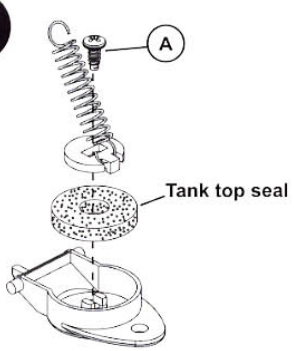

1a



2



2a

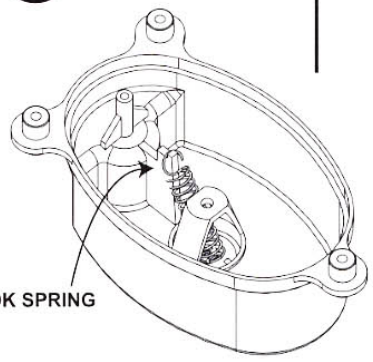

3

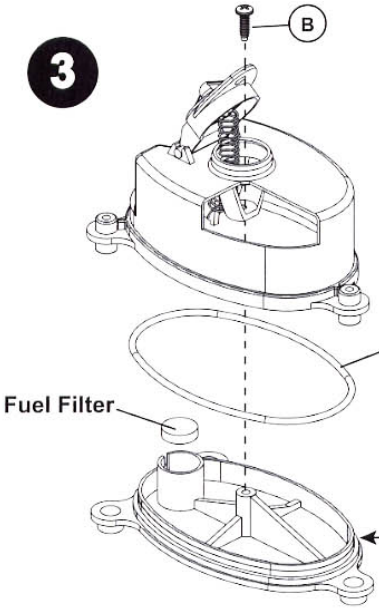

Please note tank is shown cut away to show central screw position.

Ensure the tank seal is located correctly around the tank base.

3a

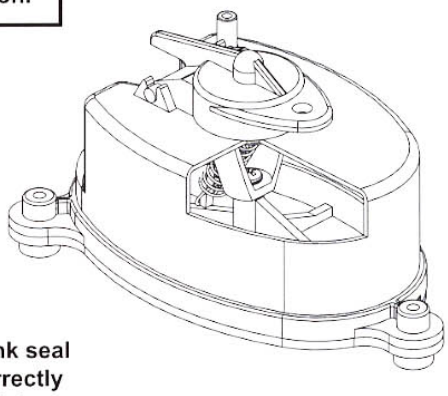

Schumacher

21 XT-R 3E

4

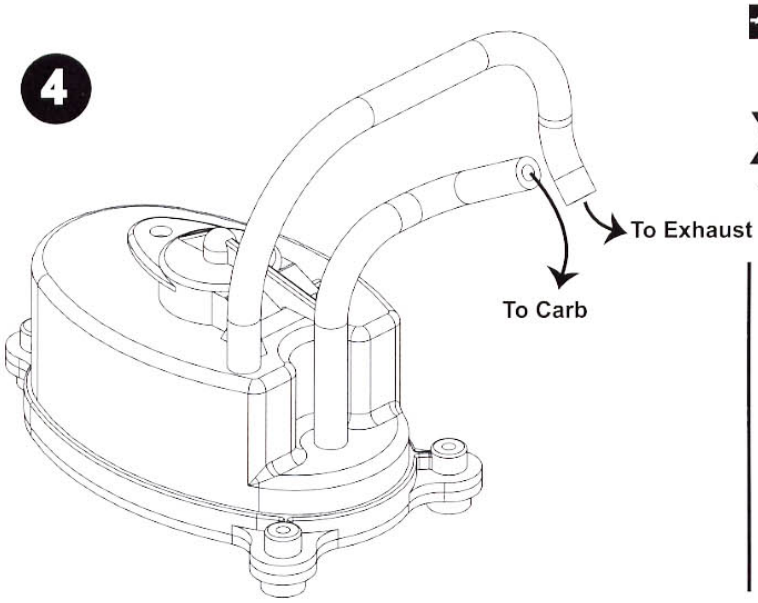

FUEL TANK ASSEMBLY

A

X3 No4 1/2 Csk Head

5

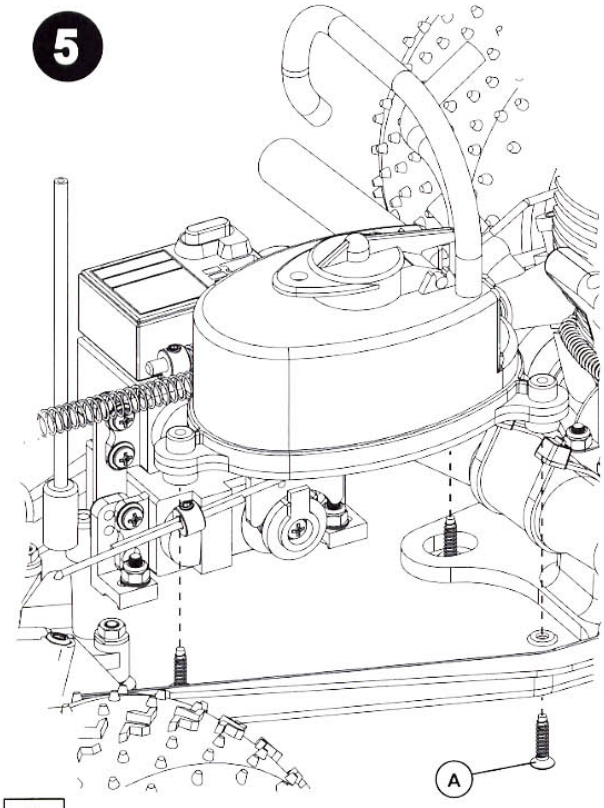

5a

Cut the fuel tube to length & plug onto exhaust & carb as shown in step 4.

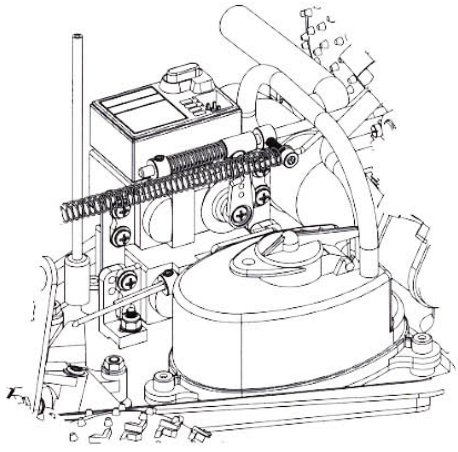

Schumacher

21 XT-Race

INSTALLING
AIR FILTER

1

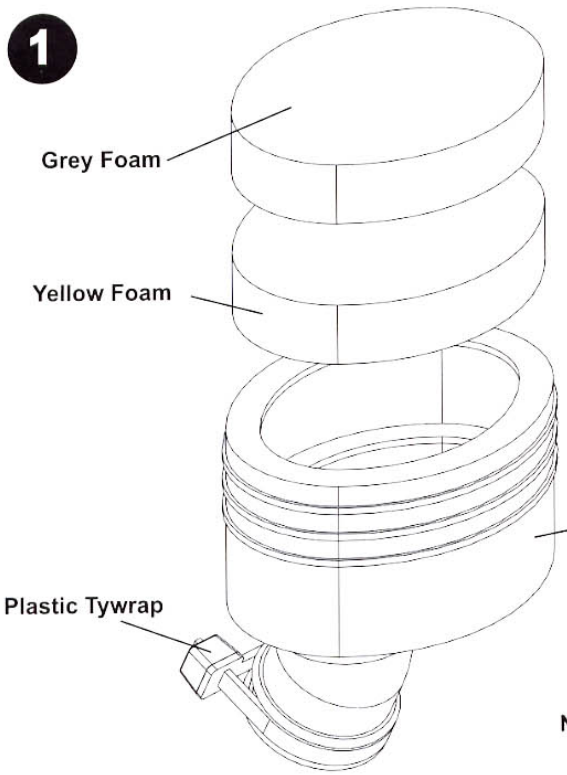

Place Filter over "carb" intake and pull tywrap tight. N.B. NEVER RUN YOUR CAR WITHOUT THE AIR FILTER IN PLACE. This will damage the engine.

1a

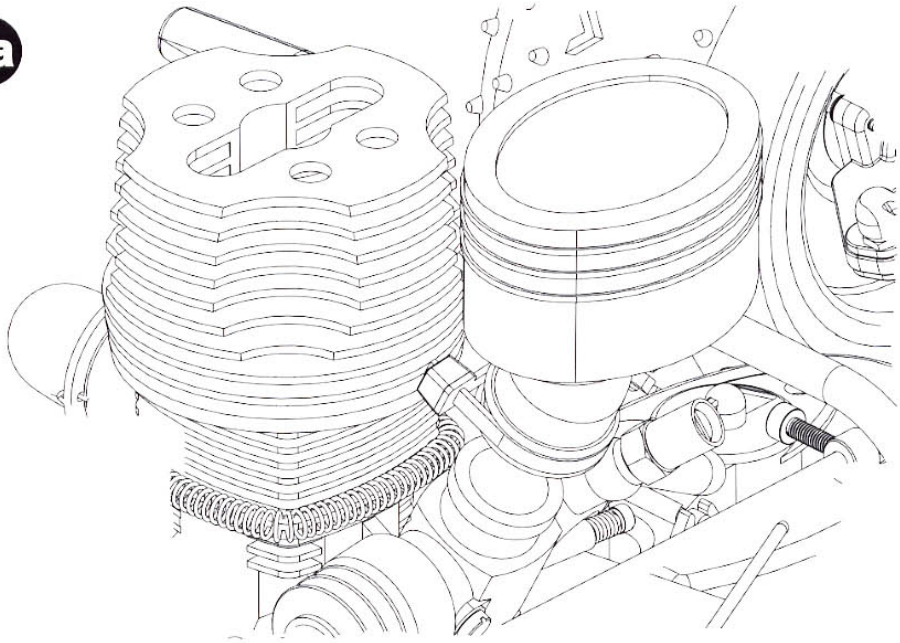

Alloy Rear Wishbones.
CNC machined Purple Alloy wishbones. Stronger than the kit originals.

✪ G559H



Alloy Front Wishbones.
CNC machined Purple Alloy wishbones. Stronger than the kit originals.

✪ G558G



✪ U5063P.
Narrow 21XT optional bodyshell.

U5075E. ✪
21 XT/R3e standard kit bodyshell.

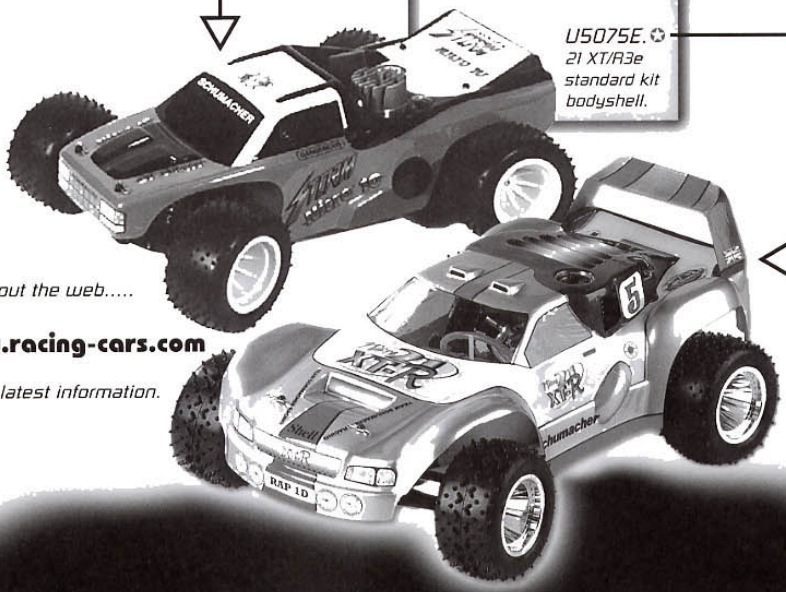

Check out the web.....

www.racing-cars.com

for the latest information.



The Nitro 21 XT-R Desert Storm is the World's Most Powerful 1/10th Scale Truck. It is capable of speeds in excess of 70 MPH! (110 KPH) & 0-40 MPH in a staggering 1.5 Seconds. The 21 XT-R rear exhaust Pro engine produces 2.1 BHP @ 40,000 rpm & 940 BHP per Ton. Which can propel the "Desert Storm" down a scale standing 1/4 mile in a mind blowing 2.7 Seconds! With its large off road tyres & four wheel independent suspension this truck can handle the roughest terrain with ease. The Factory Option "SPEED SECRETS" list allows you to customise your car to make it stronger & faster.

Can you handle the power?



www.racing-cars.com

Schumacher

U2391M

Ballbearing Steering Set.
Offers ultra smooth steering action & a longer life than the standard bushes.



Alloy Engine Mount G554C

CNC machined purple alloy. Offers a stronger alternative than the standard item, with better heat dissipation.



Alloy Pro Shock Bodies.
Hardened anodised alloy shock bodies. Stronger & smoother than the kit originals.

U1963E



Turnbuckle Adjuster Set.
Allows fine adjustment of toe-in, front & rear camber. To improve handling & traction.

U1838D



U2096M



Aerial Mount.
Purple Chrome Aerial Mount. Jazzy version of standard car equipment.

U1818U



Alloy Shock Seal Housings (pr).
Purple CNC housing, Offers strength and a super smooth operation.

Alloy Steering Arms.
Strong CNC purple alloy parts designed to replace the standard plastic items.

U2432L



Tungsten Carbide Diff Balls 3mm (pk12).
Super strong balls with excellent life & smoothness.

U2324H



U2365G



Alloy Pivot Blocks.
CNC machined blocks offering looks, strength & accuracy.

U2165V



Alloy Body Mounts.
Purple Alloy mount includes the flex posts and fittings.

Thrust Bearing - Tungsten Carbide.
Super smooth, long life, low friction. The ultimate in thrust race bearings.

U1954V



Purple Alloy M4 Nyloc Wheel Nuts.
Lightweight flanged purple wheel nuts in jazzy purple!

U2135J



SPEED SECRETS

XT-R 21

Schumacher Tyre Technology!



U6502W ~ Truck Vee - 2



U6503X ~ Truck Vee - 4



U6525 ~ Truck Stagger Rib



U6508C ~ Truck Mini Spike



U6542K ~ Truck Micro Spike



U6701D ~ "Venom" Truck Road Tyre



U6541J ~ Truck Foam Insert

Schumacher

www.racing-cars.com

Schumacher Racing Products Ltd.
71-73 Tenter Road ~ Moulton Park ~ Northampton ~ NN3 6AX
Tel: +44(0) 1604 790770 ~ Fax: + 44(0) 1604 790209

Schumacher U.S.A. Inc.
6302 Benjamin Road ~ Suite 404 ~ Tampa ~ Florida ~ 33634
Tel: (813) 9691 ~ Fax: (813) 889 9593