S1654

ATOM3



Instruction Manual ISS01

Schumacher
71-73 Tenter Road
Moulton Park
Northampton
NN3 6AX

www.racing-cars.com

ATOM3

IMPORTANT SAFETY NOTES

- We strongly recommend that anyone driving RC cars, or organising events, should obtain third party liability insurance. In the UK this can be done by joining the BRCA. www.brca.org
- This product is not suitable for children under the age of 14, without the direct supervision of a responsible adult.
- Select an area for assembly that is away from the reach of small children.
- The parts in this kit are small and can be swallowed by children causing choking and possible internal injuries.
- Exercise care when using hand tools and sharp instruments during assembly.
- Carefully read all manufacturers warnings and cautions for any additional items used in the construction.
- In line with our policy of continuous development the exact details of the kit may vary.
- DO NOT use this car on public roads or in places where it can interfere with traffic, people or animals.
- Always check the operation of the radio with the wheels off the ground, before using the car.
- Make sure the radio and car batteries are fully charged before use.
- Disconnect and remove the battery from the car when not in use.
- Always store and charge LiPo batteries in a fireproof container.
- DO NOT put fingers or any objects inside rotating or moving parts as this may cause injury.
- Make sure the charger is correctly set for the type of battery you are using.
- Incorrect charging may cause a fire.
- Insulate all exposed electrical wiring. Exposed or damaged wires can cause short circuits and fire.
- The motor and speed controller can become hot during use. DO NOT touch them immediately after using your car as this may cause injury.

ADDITIONAL ITEMS REQUIRED


Radio Equipment

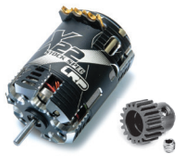
Motor and Pinion Gear



1S LiPo Battery


Battery Charger


Steering Servo


Electronic Speed Controller


Bodyshell


Polycarbonate Paint



Tyres and Inserts

TOOLS REQUIRED



1.5mm Hex Driver - U2789

2.0mm Hex Driver - U2790

2.5mm Hex Driver - U2791

3.0mm Hex Driver - U2792

5.5mm M3 Nut Driver - U2795

Body Reamer - U2818

Pliers - CR528

Side Cutters - CR527

Soldering Iron - CR275

Solder - U3107

Curved Scissors - CR044

ICON KEYS

THREAD LOCK PURPLE CR865 — CORE RC Low Strength Thread Lock 3ml (PURPLE) - CR865

THREAD LOCK BLUE CR520 — CORE RC Medium Strength Thread Lock 3ml (BLUE) - CR520

CA GLUE CORE CR522 — CORE RC 522 Pro Tyre Glue 20g + 2 Nozzles - CR522

Caution/Important note. Please read.

LH — Left-Hand Side of car

RH — Right-Hand Side of car

TEAM TIP — Additional information that will help you build a faster race car.

Advanced Set up Sheets - Page 37 - 40
The kit build will offer an easy and safe setup option for most track conditions.

www.racing-cars.com

ATOM3

STEP 1

A x1
M3 x 6 Csk Hd Screw

B x2
M3 x 8 Csk Hd Screw

C x1
M3 Black Nut

D x1
M3 Thread Insert

E x3
M3 Washer

F x1
M3 X 12 Cap Hd Screw

G x1
M3 x 25 Csk Hd Screw

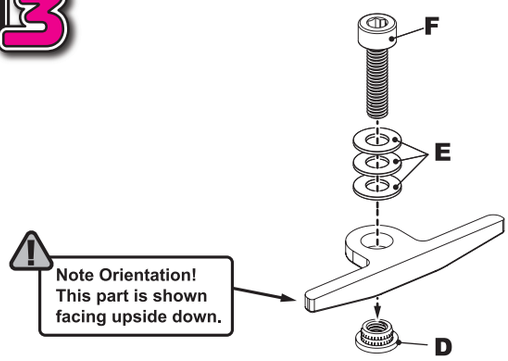

Note Orientation!
This part is shown facing upside down.

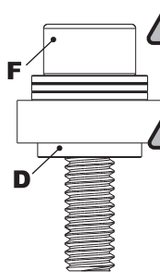

Use screw 'F' and washers 'E' to fit the inserts 'D'.
(Keep 'F' and 'E' safe for later.)

Tighten screw 'F' until the M3 thread insert 'D' is pulled into the carbon fibre part as shown.



LiPo Positon | Rear 1 ☐ 2 ☐ 3 ■ 4 ☐ Front

See Page 19 for more information

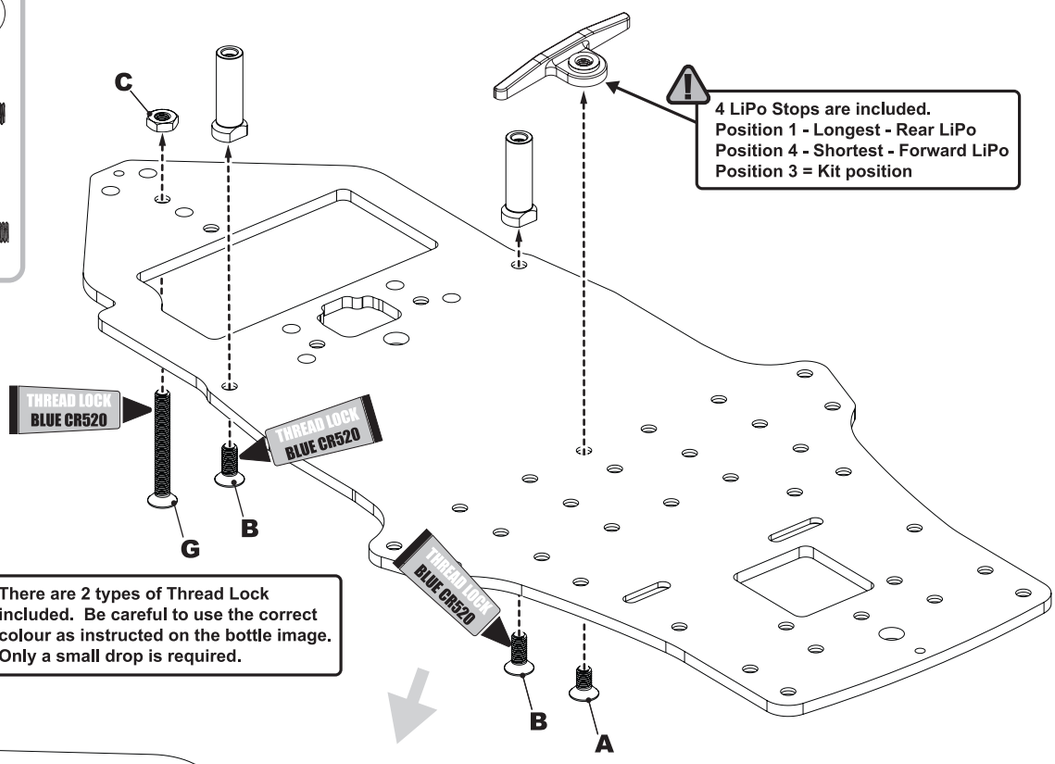

4 LiPo Stops are included.
Position 1 - Longest - Rear LiPo
Position 4 - Shortest - Forward LiPo
Position 3 = Kit position

There are 2 types of Thread Lock included. Be careful to use the correct colour as instructed on the bottle image. Only a small drop is required.

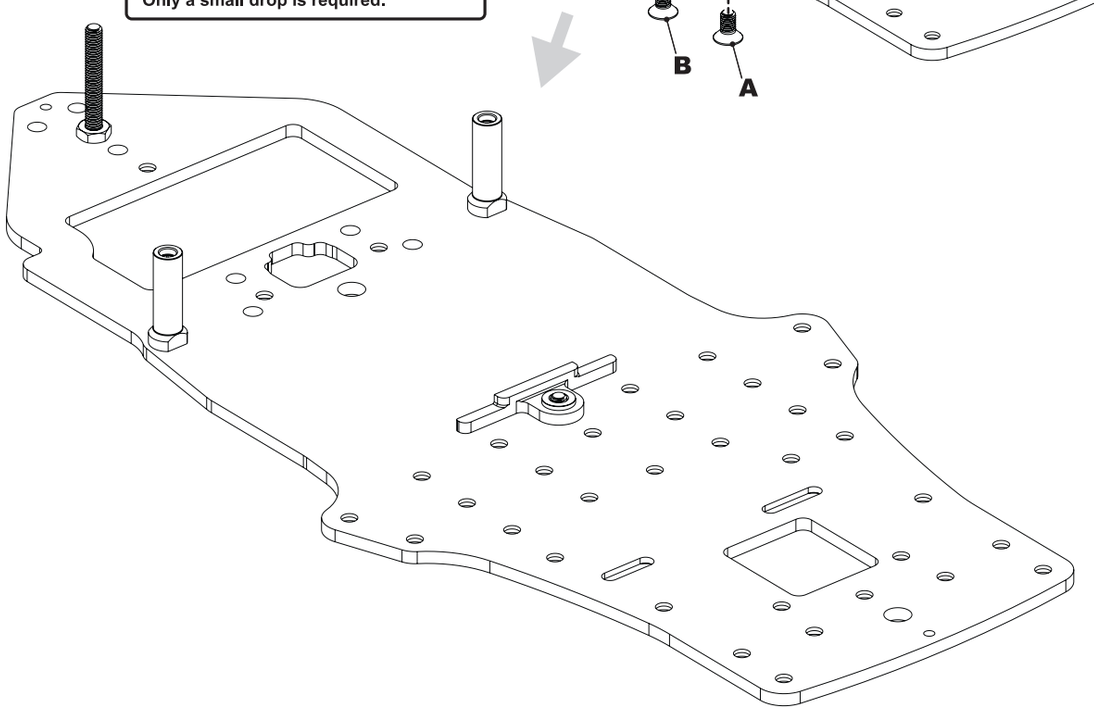

ATOM3

STEP 2

A x2
M3 x 6 Csk Hd Screw

B x3
M3 x 8 Csk Hd Screw

C x2
5.5mm Pivot Ball

D x1
Ball Stud Ultra Short

E x1
M2.5 x 8 Button Hd Screw

Screw 'E' must not be over tightened! Allow a small clearance between the screw head and the plastic part to ensure a free pivot in the step 4.

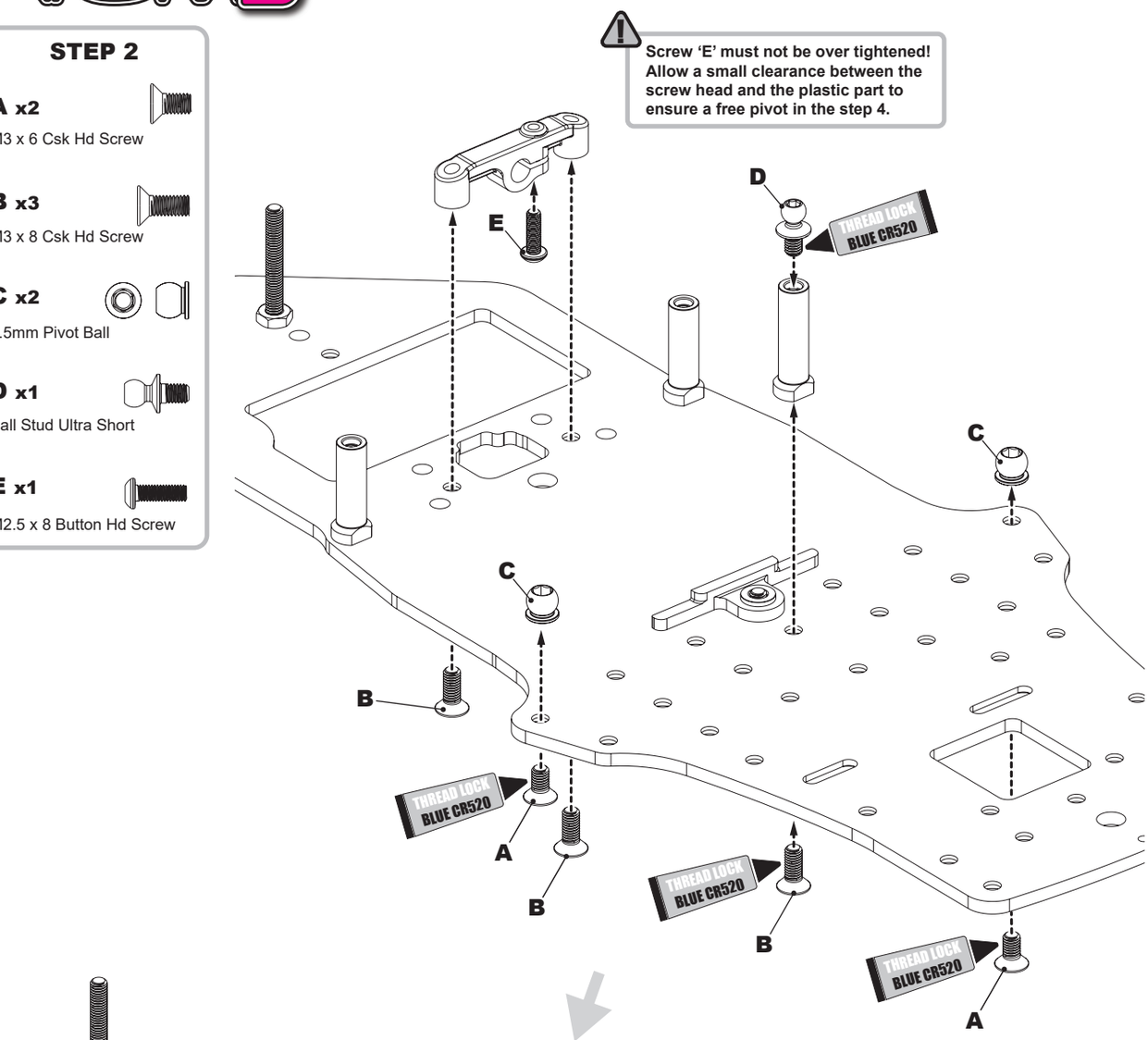

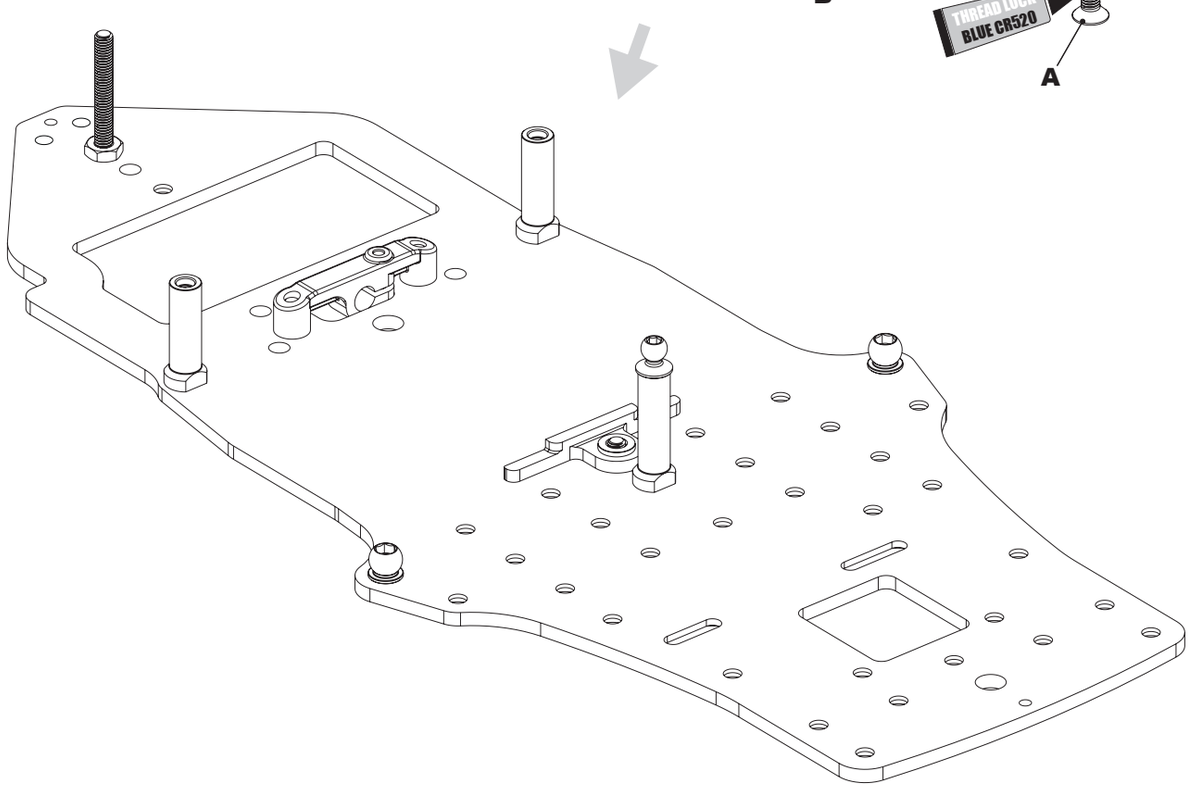

ATOM3

STEP 3 and 4a

A x2
M3 x 6 Csk Hd Screw

B x2
M3 x 8 Csk Hd Screw

C x7
M3 x 6 Button Hd Screw

D x4
M3 Thread Insert

E x2
5.5mm Pivot Ball

F x3
Ball Stud Ultra Short

G x1
Silver Ball Stud Short

H x2
M3 x 4 Button Hd Screw

I x2
M3 x 8 Button Hd Screw

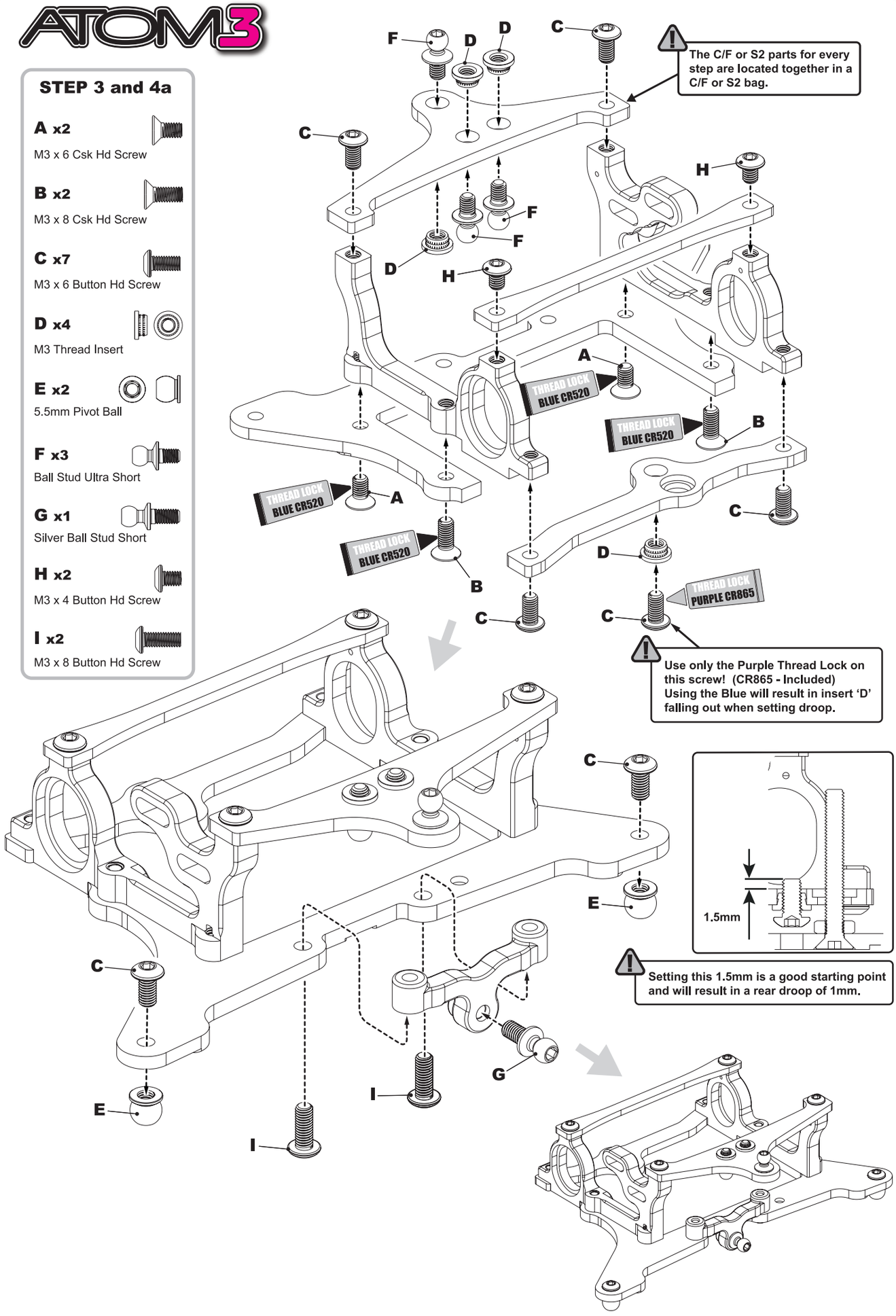

ATOM3

STEP 4b

A x4



M2.5 x 8 Button Hd Screw

Ensure the counterbore on the side link is facing outward.

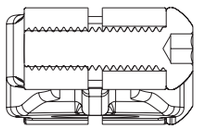

To position the pod onto the chassis, firstly, put the centre ball into the centre pivot, then lower the rear of the pod down onto the spring screw.

Tighten the 4 screws 'A' lightly, checking the plastic side link pivots freely. If they won't pivot sideways freely, loosen screws 'A'.

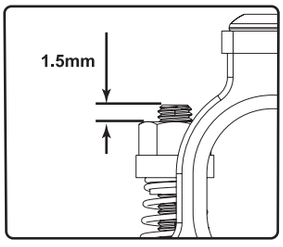

This 1.5mm measurement sets the pod height at the kit setting. The pod base should be horizontal when at ride height.

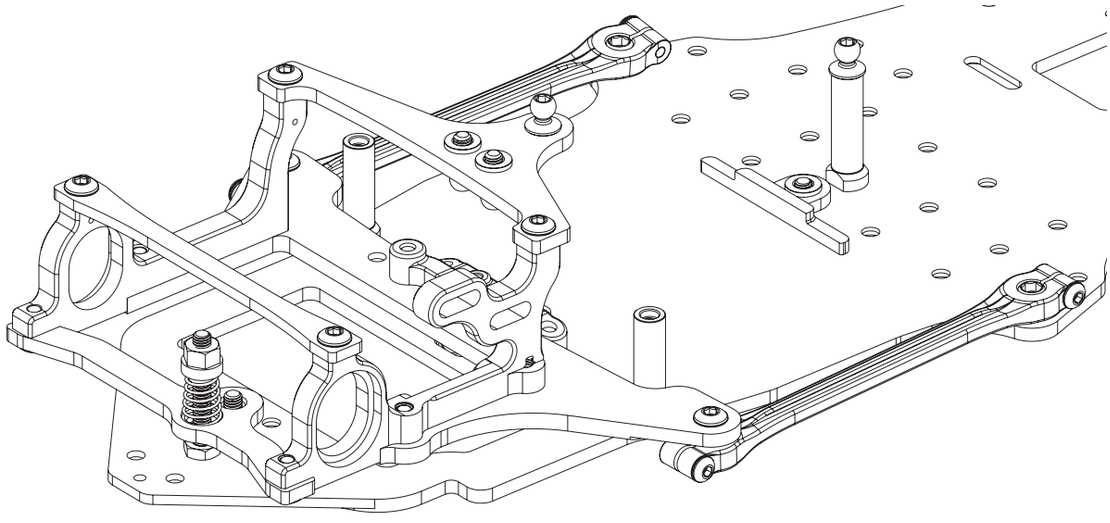

ATOM3

STEP 5

A x2
M3 x 6 Button Hd Screw

B x2
Ball Stud Ultra Short

C x2
M3 x 6 Patched Grub Screw

D x6
M3 Thread Insert

E x2
M3 x 8 Button Hd Screw



LiPo Positon | Rear 1☐ 2☐ 3■ 4☐ Front

See Page 19 for more information

The LiPo position must be set to match the front LiPo stop selected in step 1, page 2.

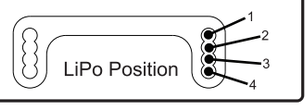

Note: The couterbore is on the underside.

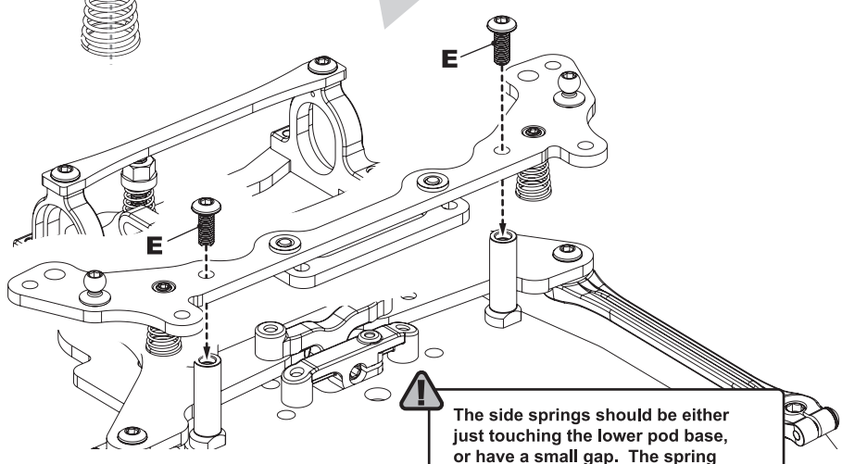

The side springs should be either just touching the lower pod base, or have a small gap. The spring should not have any preload. This is set by adjusting grub screw 'C'.

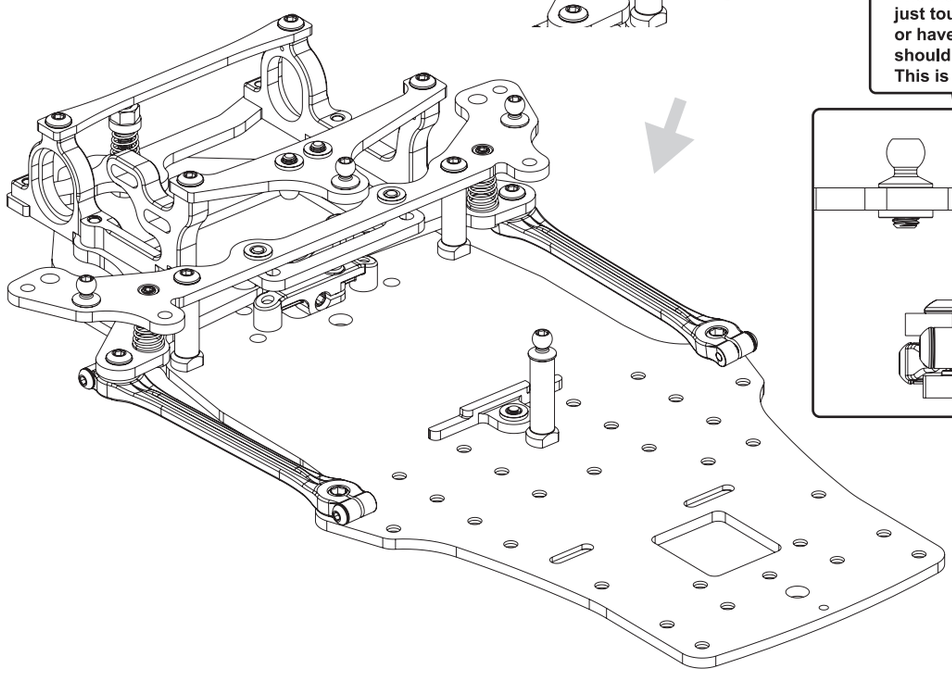

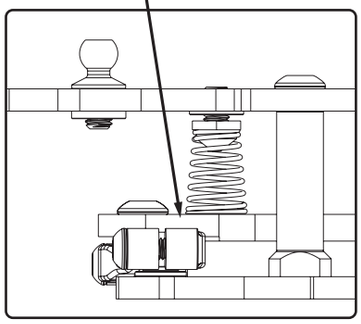

ATOM3

STEP 6

A x2
M3 x 6 Button Hd Screw

B x2
M3 x 6 Csk Hd Screw

C x2
M3 x 8 Csk Hd Screw

D x2
M3 x 10 Csk Hd Screw

E x2
Grey 2.0 mm

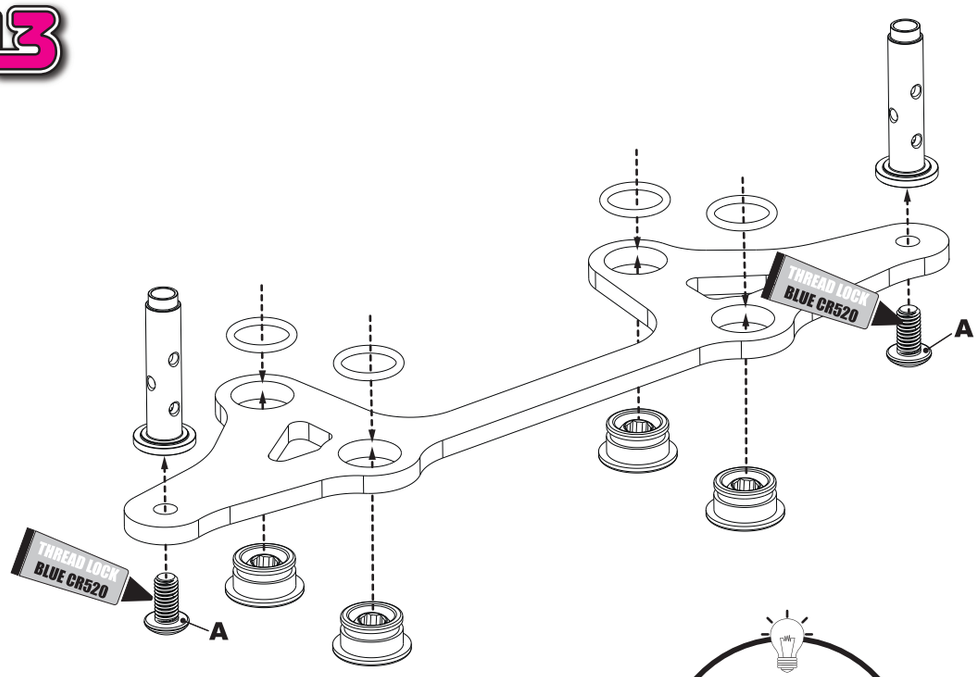

TEAM TIP
U7920 0.50mm and U7921 0.75mm alloy ride height spacers, may be used to set ride height with ease!

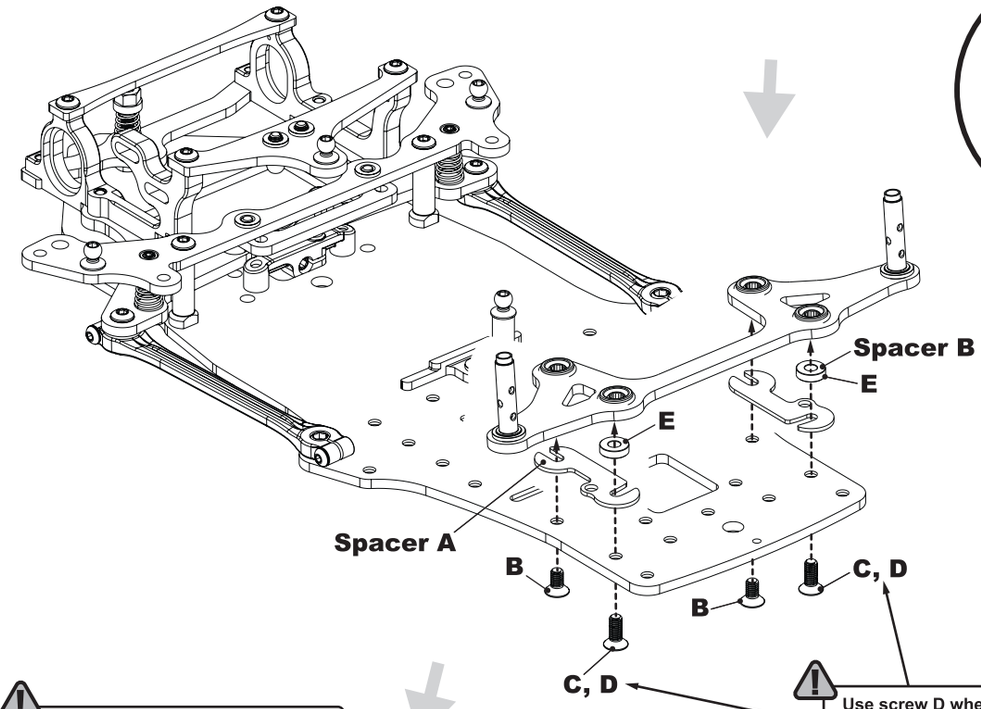

Use screw D when using more than 4mm of spacers.

Using 'E' (2mm) along with the 1mm slide in spacer shown, offer the kit setting.

This is 3.2mm ride height and 5° when using 42mm diameter tyres.

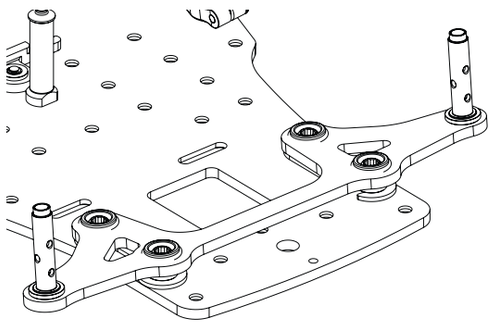

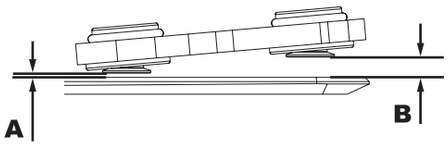

Ride Height and Castor is most easily set with spacers 'A' and 'B'. (as seen in in the diagram above). More information can be found on Page 17.

ATOM3

STEP 7

A x2
M3 Nyloc Nut Black

B x2
Ball Stud Short Low

C x2
M3 x 0.5 Washer

Always use at least a 0.5mm washer below ball stud B.

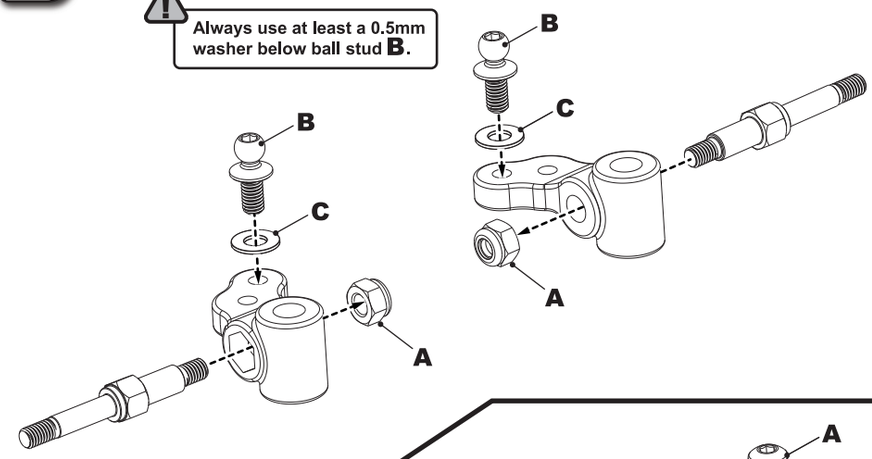

STEP 8

A x2
M3 x 6 Button Hd Screw

D x6
Droop spacer 0.25mm Black

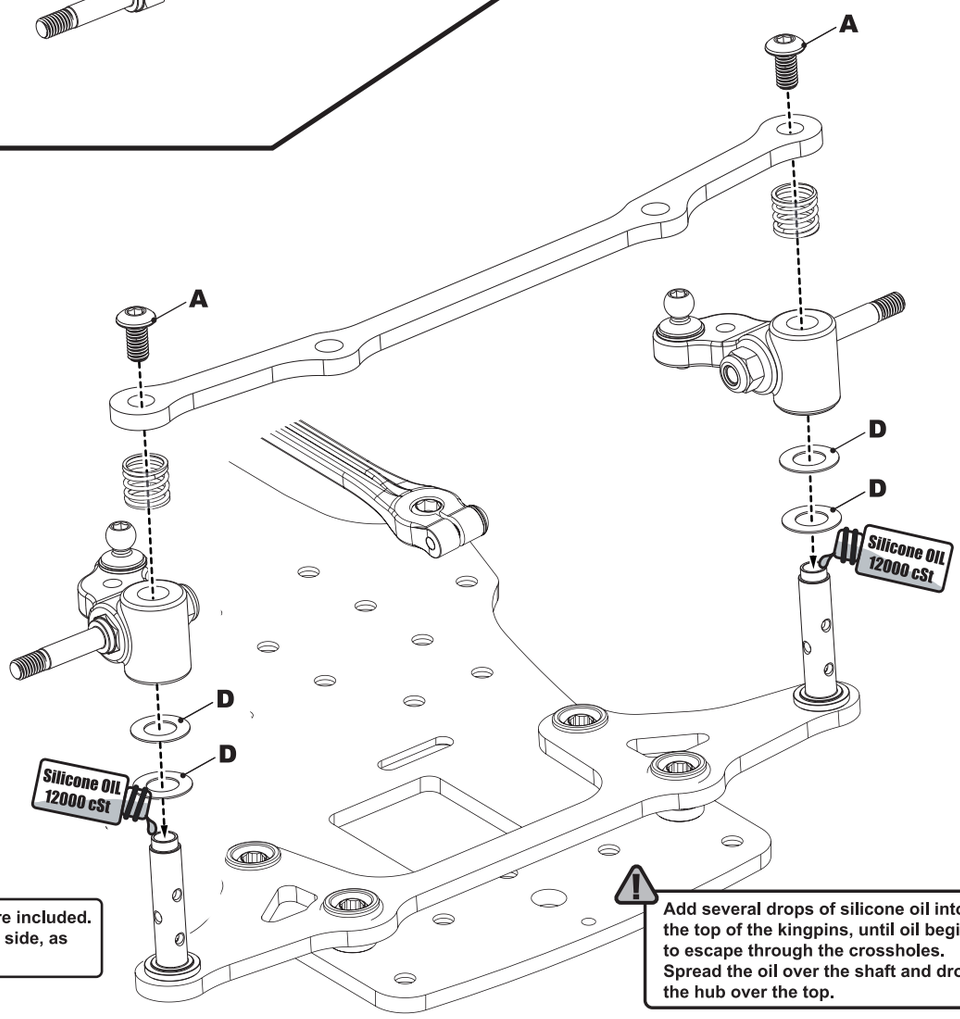

6x Droop Spacers 'D' are included. The kit setting is 2x per side, as shown.

Add several drops of silicone oil into the top of the kingpins, until oil begins to escape through the crossholes. Spread the oil over the shaft and drop the hub over the top.

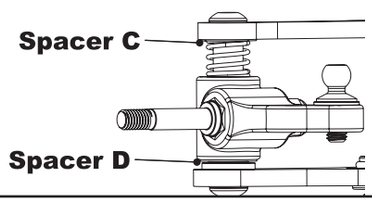

-Increasing spacer 'C' increases ride height.
-Changing spacer 'D' doesn't affect ride height.
-Increasing spacer 'C' or 'D' decreases droop.
See Page 17 & 18 for more information.

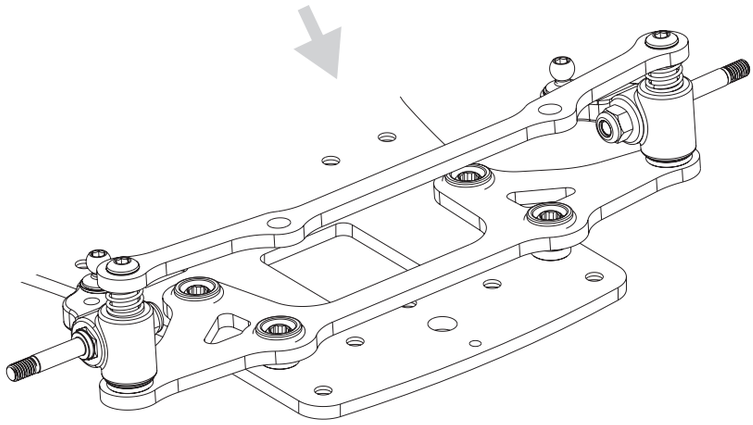

ATOM3

STEP 9

A x2
M3 x 8 Button Hd Screw

B x1
M3 x 10 Button Hd Screw

C x2
M3 x 7.5mm Servo Screw

D x2
M3 x 0.5mm Washer

Note the shape of the turnbuckle.
This groove indicates the left hand thread.

RH Thread — LH Thread

Note: Build a pair of turnbuckles with the same length.

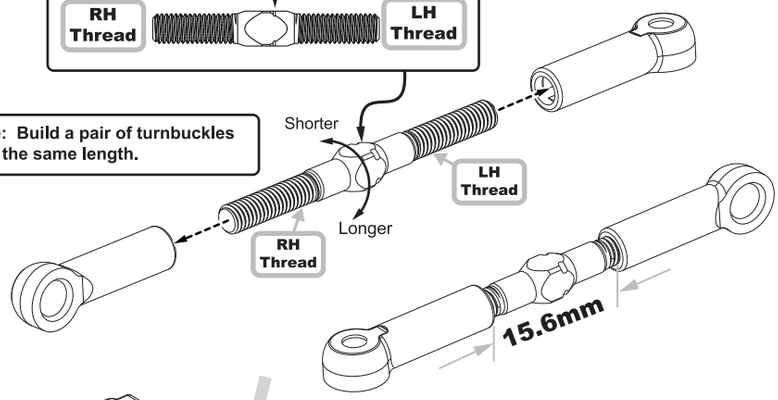

Ensure the servo is at the neutral position before installing the servo saver.

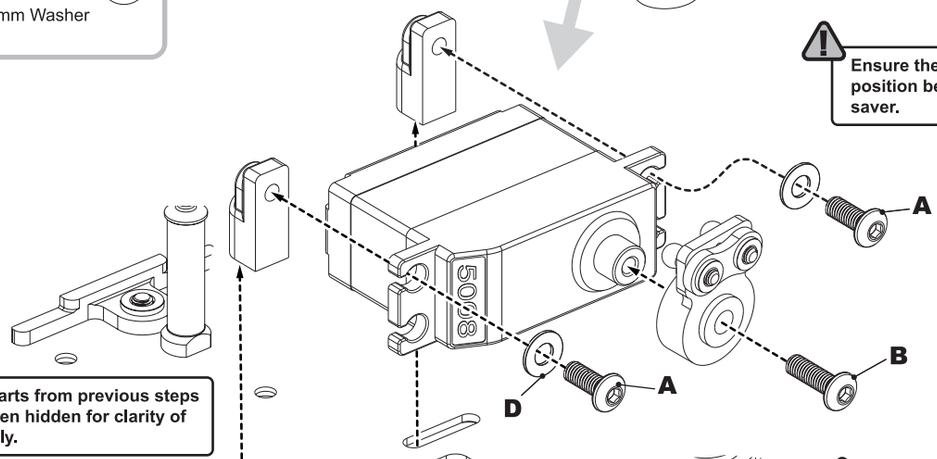

Some parts from previous steps have been hidden for clarity of assembly.

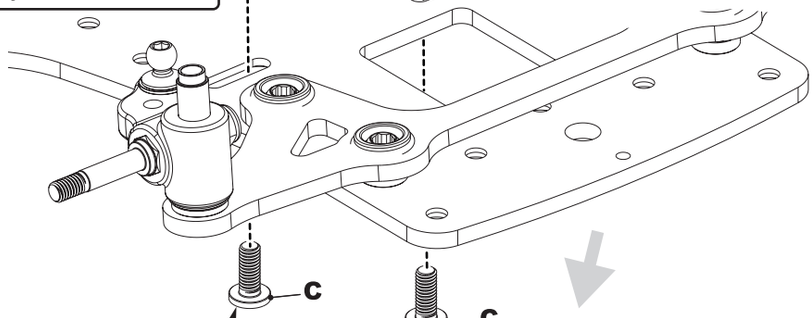

The included white servo saver fits 25T servos such as Core Rc, Highest, Futaba and Power HD.
-U8477 - 25T Servo Saver CORERC - E5
-U8478 - 23T Servo Saver Sanwa - E5

Adjust screws **C** so that the servo spline is mounted centrally to the car.

TEAM TIP
Fit both left hand threads on the same side of the car. This will make toe in adjustments easier.

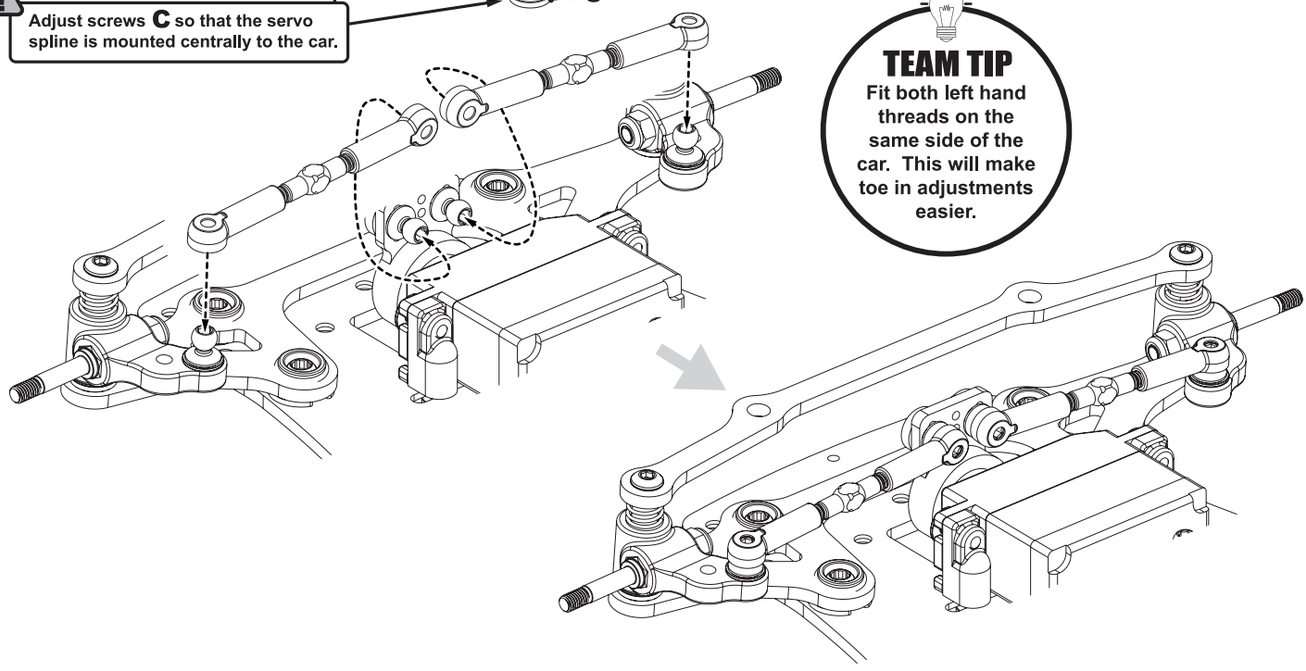

ATOM3

STEP 10a

A x1
ø2.0 x 9.8mm Pin

B x2
Diff Gear Shim

C x1
'O' Ring 8x5mm

D x1
ø1/4" x ø3/8" Bearing

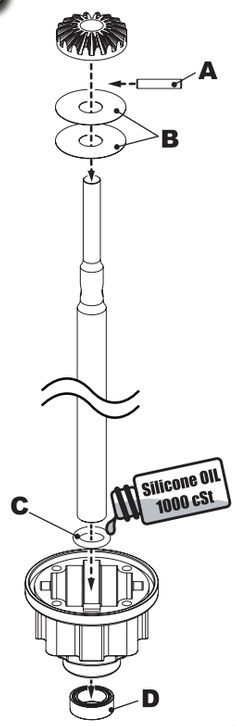

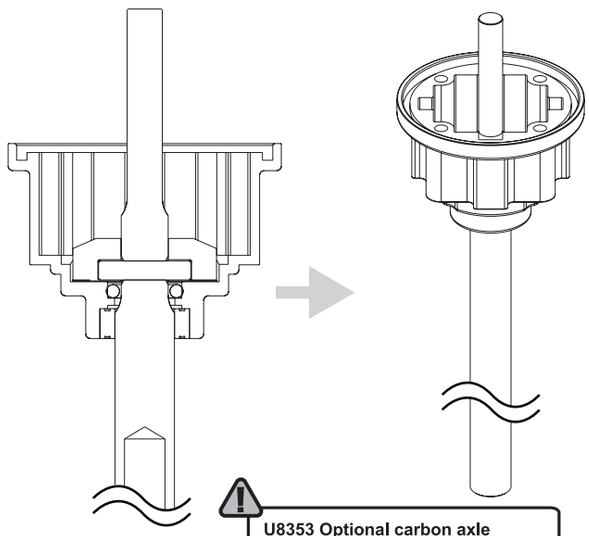

U8353 Optional carbon axle available for ultimate performance.

Use a small amount of oil to hold the components in place during assembly.

STEP 10b

A x2
Diff Gear Shim

B x1
'O' Ring 8x5mm

C x1
5 x 9x 3 Bearing

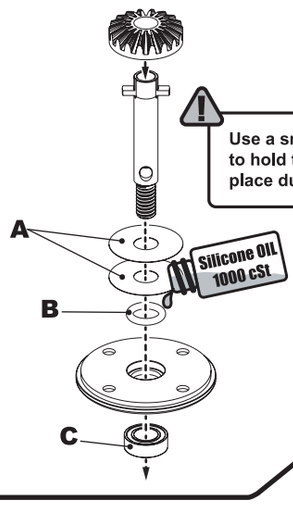

Use a small amount of oil to hold the components in place during assembly.

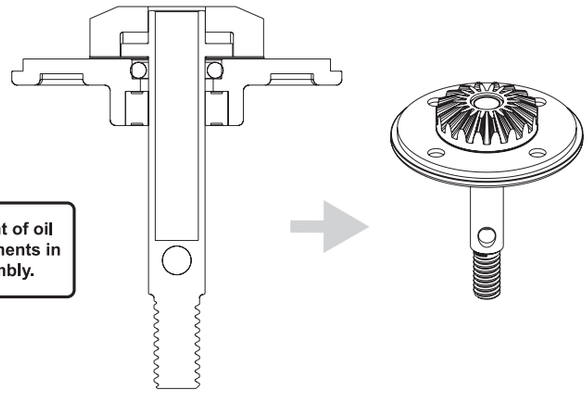

STEP 11

A x4
Bevel Gear Shim

B x4
M2.5x 8 Csk Screw

C x1
'O' Ring 25mm

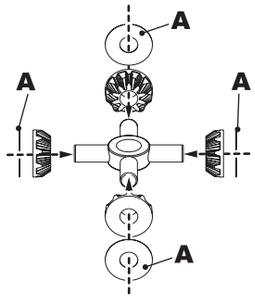

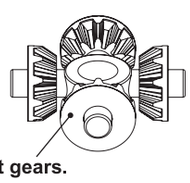

Planet gears.

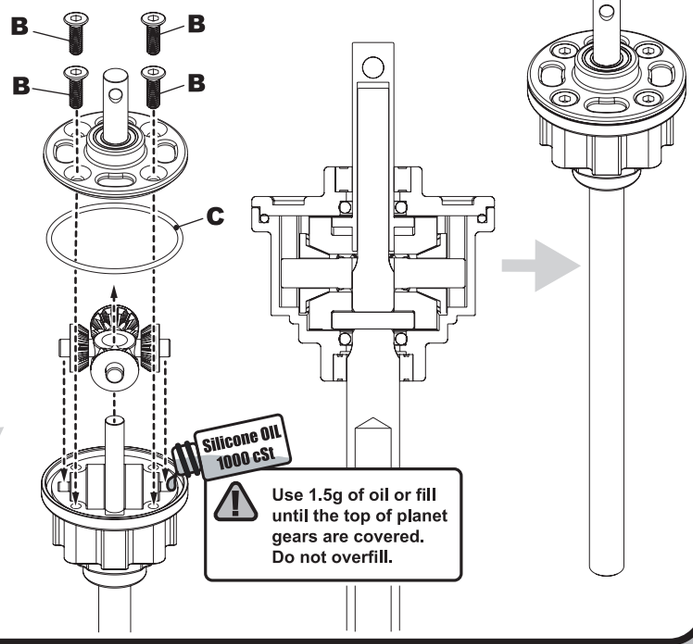

Use 1.5g of oil or fill until the top of planet gears are covered. Do not overfill.

ATOM3

Step 12

A x4
M2.5x 6 Button Hd Screw

B x1
M2.5x 8 Button Hd Screw

C x1
Thin Pin Drive Washer

Do not overtighten screws 'A'.

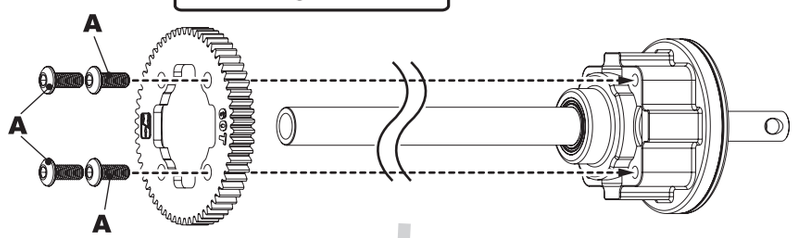

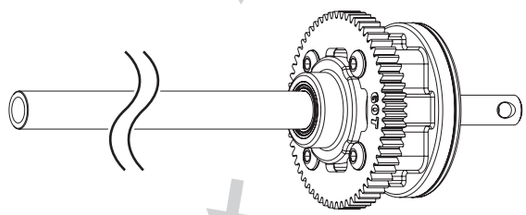

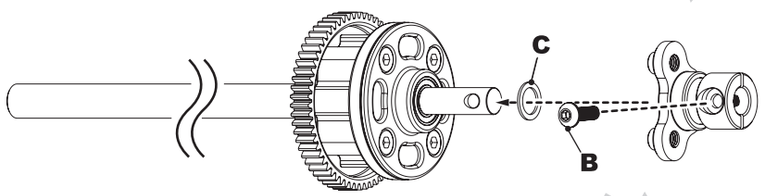

Spur Gear Options:
-U8341 - 60T 48DP (included)
-U8357 - 64T 48DP (Optional)
(64dp gears also available, but not BRCA legal for GT12)

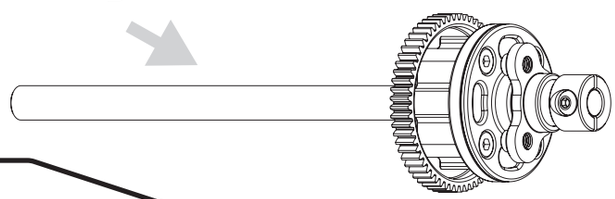

Step 13

A x3
Axle Spacer 1/4"x 0.5mm

B x1
Axle Spacer 1/4"x 2.0mm

C x1
M2.5 x 10 CAP Head

D x2
1/4" x 3/8" Flanged

Ensure the axle rotates freely with minimal endfloat.

The eccentrics are used to adjust the ride height. There are 8 different eccentrics, 7 of which can be flipped to give a total of 15 options. See page 17 to choose an appropriate one for your tyre size. If using 44mm rear tyres, 1.00 with the axle in the high position is the kit setting.

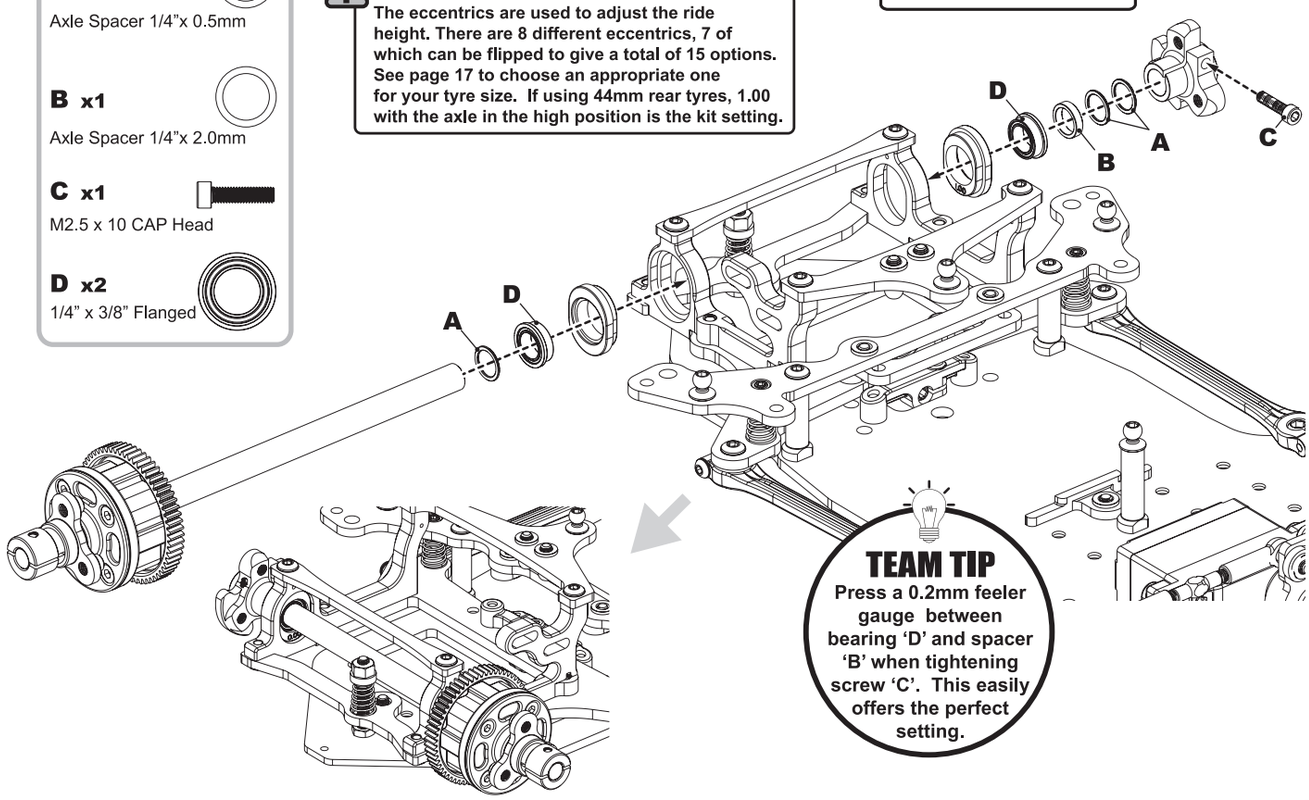

TEAM TIP
Press a 0.2mm feeler gauge between bearing 'D' and spacer 'B' when tightening screw 'C'. This easily offers the perfect setting.

ATOM3

Step 14

A x3

M3 x 14 Grub Screw

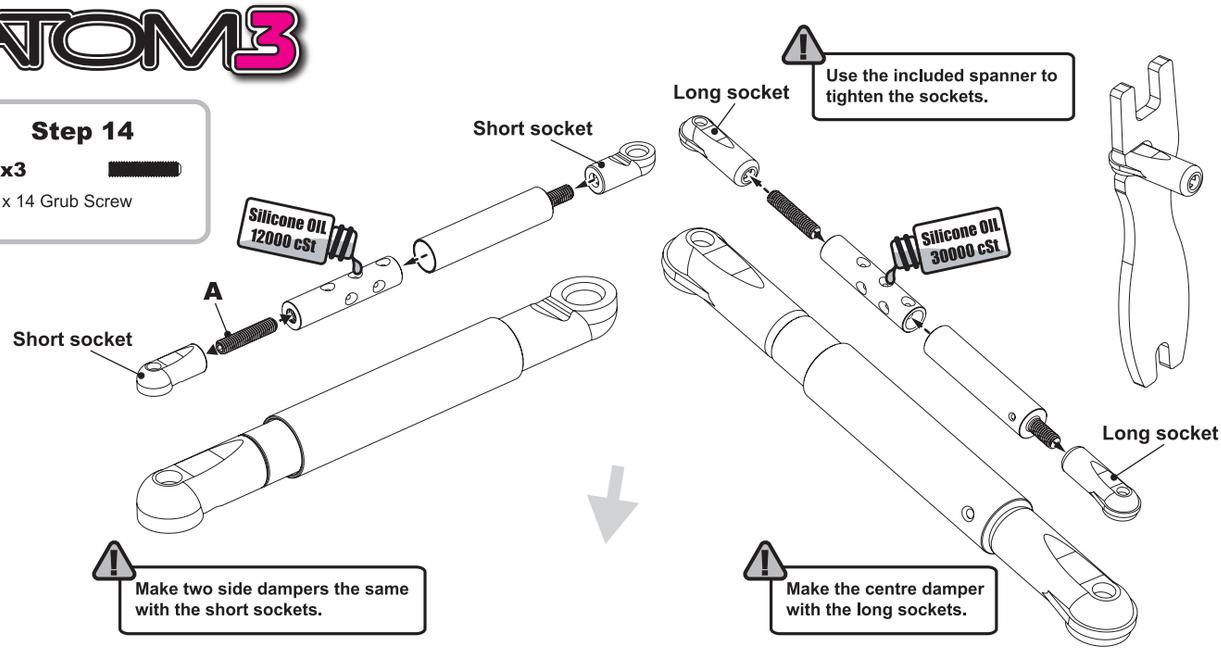

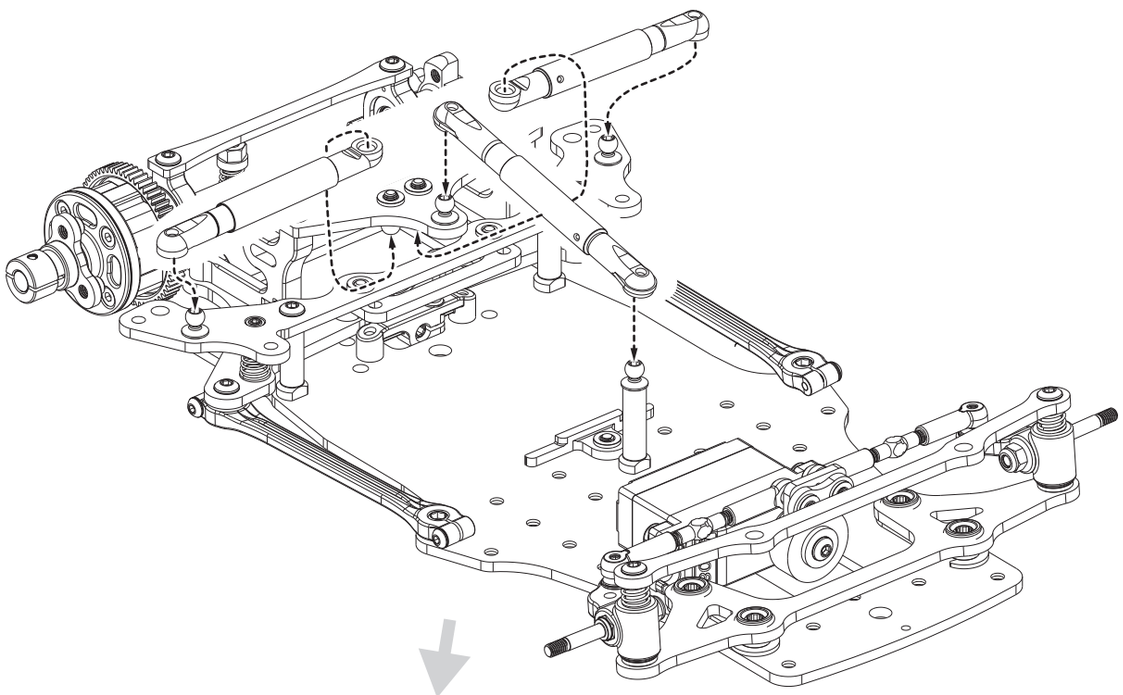

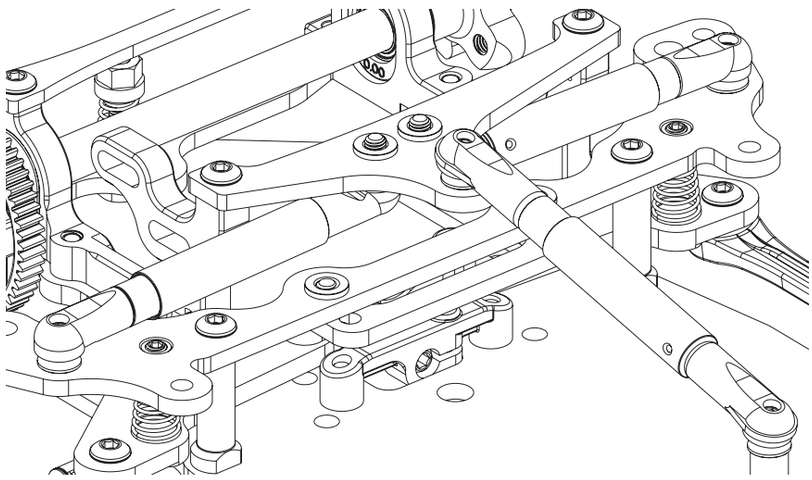

ATOM3

Step 15

A x6

M3 x 6 Button Hd Screw

B x6

M3 x 6 Csk Hd Screw

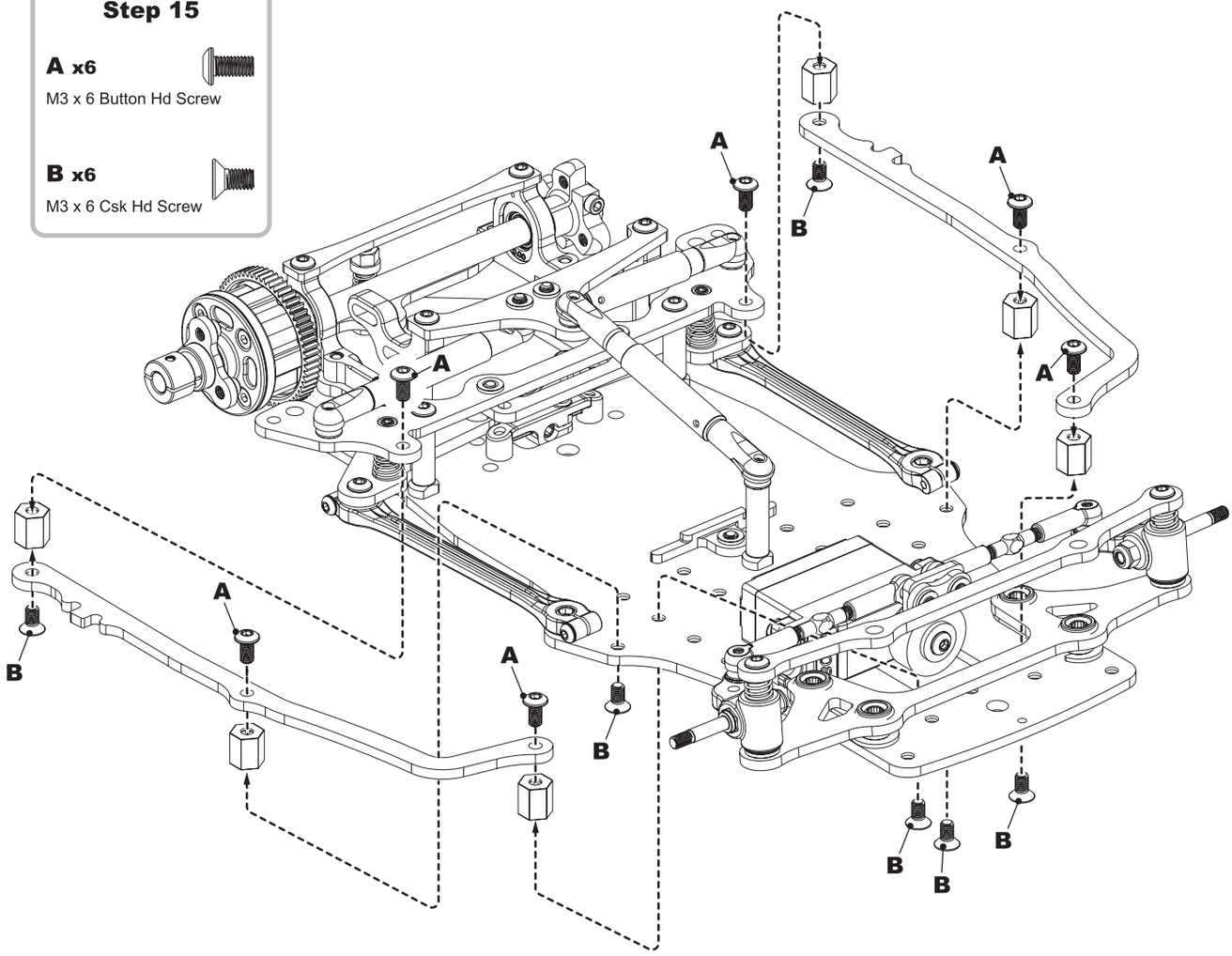

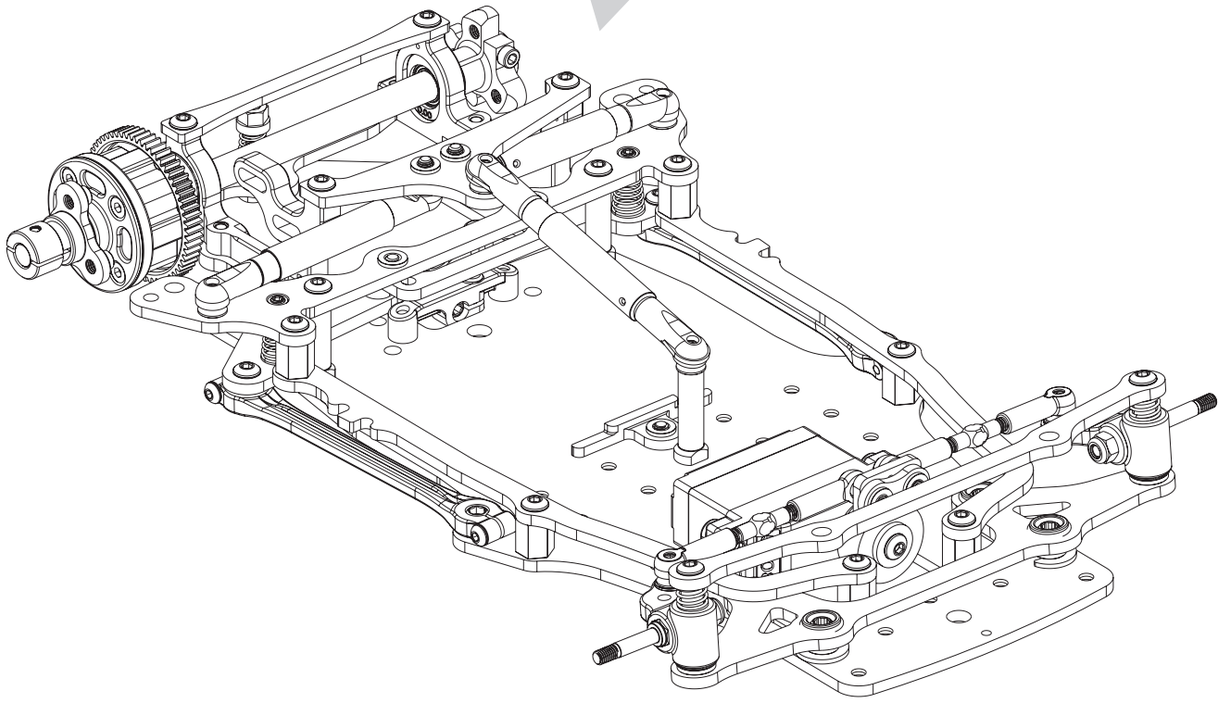

ATOM3

Step 16

A x2
M3 x 6 Csk Hd Screw

B x2
M3 x 10 Csk Hd Screw

C x2
M3 Thread Insert

D x2
M3 x 10 Button Hd Screw

E x4
ø1.5 x 11.8 pin

F x2
ø1.5 x 9.8 pin

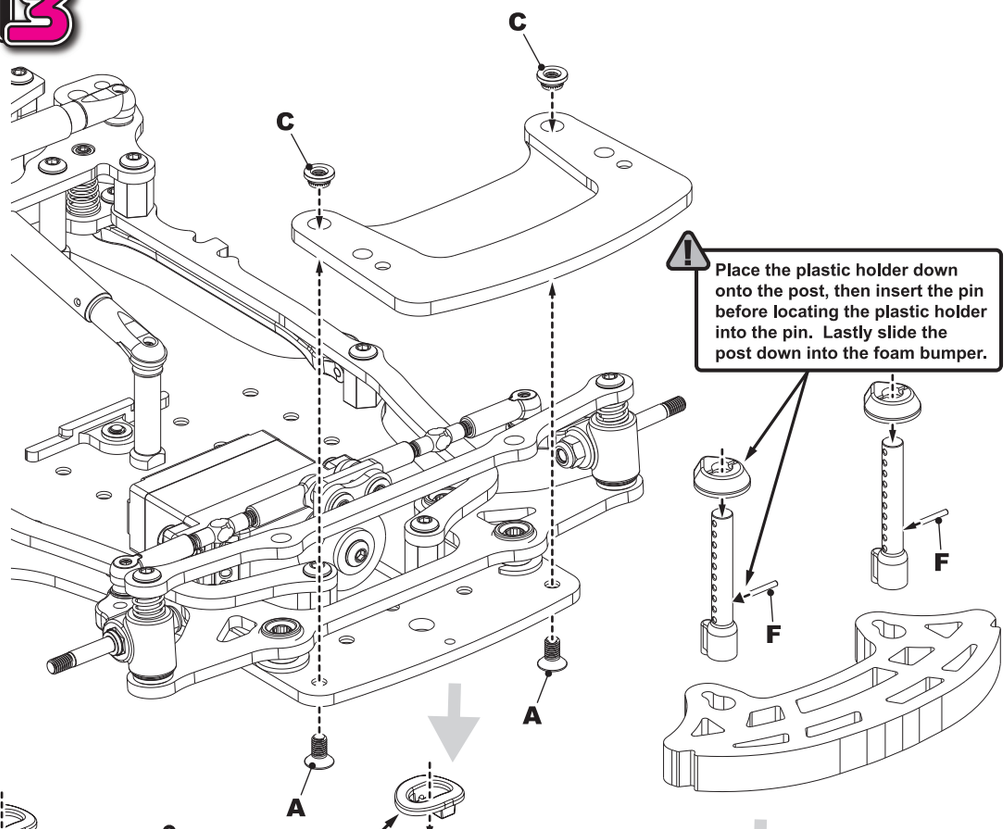

Place the plastic holder down onto the post, then insert the pin before locating the plastic holder into the pin. Lastly slide the post down into the foam bumper.

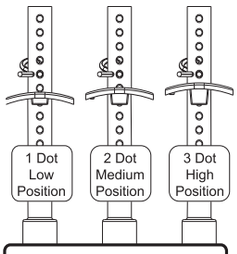

Select the correct body washer to fine tune the bodyshell height. Each incremental change is 1.2mm.

Snap the body washers onto pins 'E'.

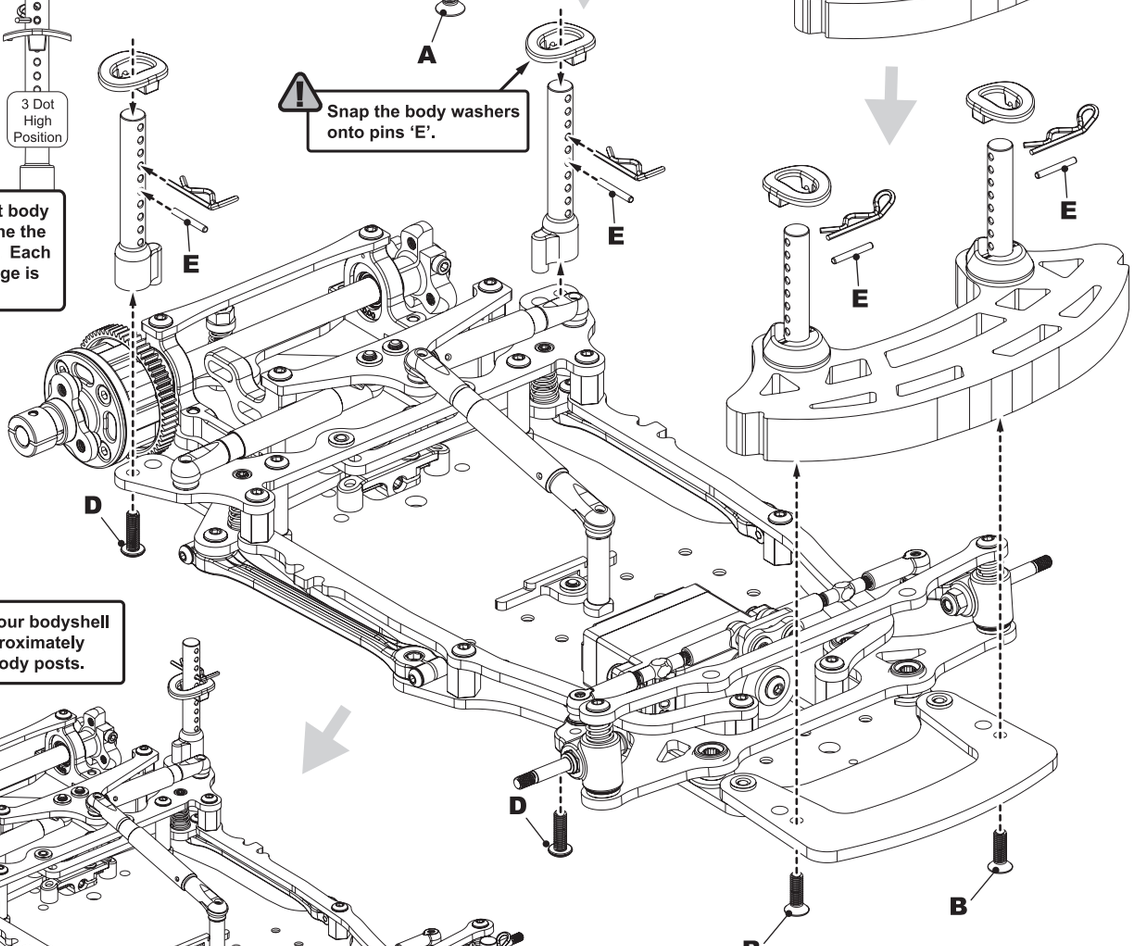

Mark and drill your bodyshell to diameter approximately 6.5mm for the body posts.

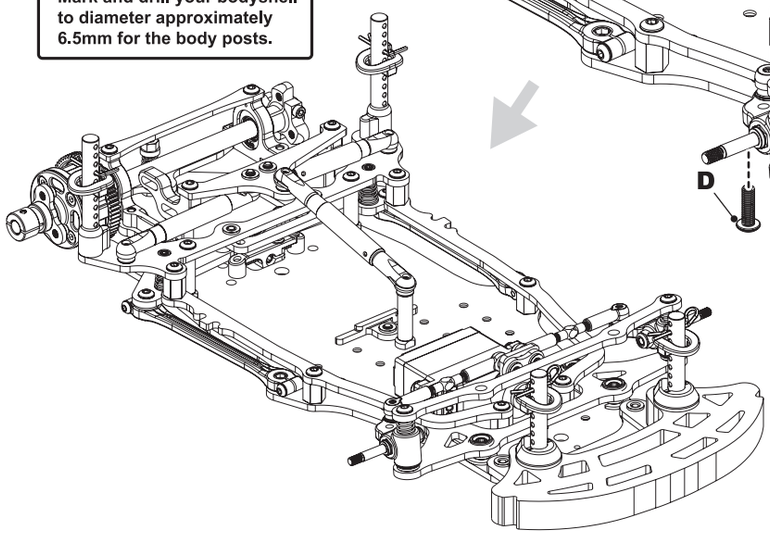

The bodyposts may be trimmed for looks and aerodynamics. A sharp knife or side cutters may be used. Alternatively use AM190041 - Arrowmax Body Post Trimmer

ATOM3

Step 17

A x6
M3 x 8 Cap Hd Screw

B x2
Alloy M3 Nyloc Nut

C x4
Flanged ø1/8" x ø5/16"

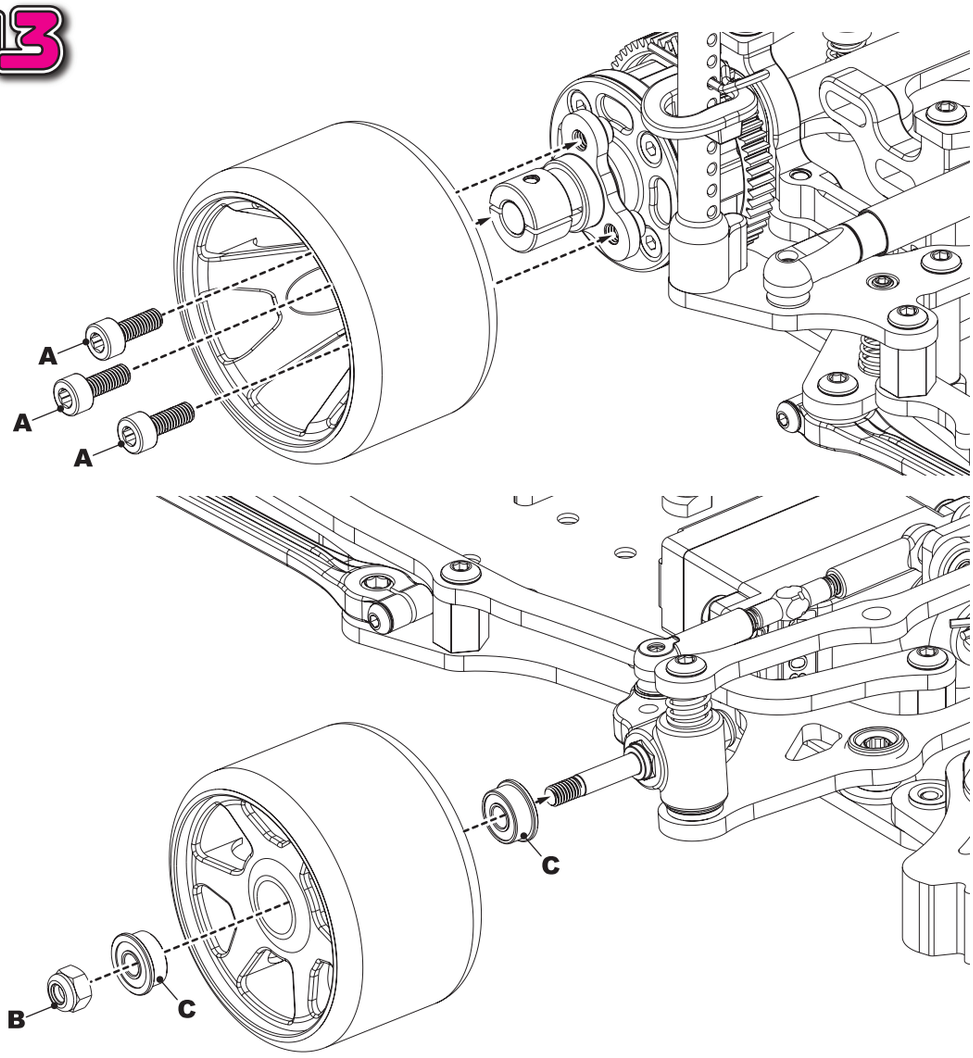

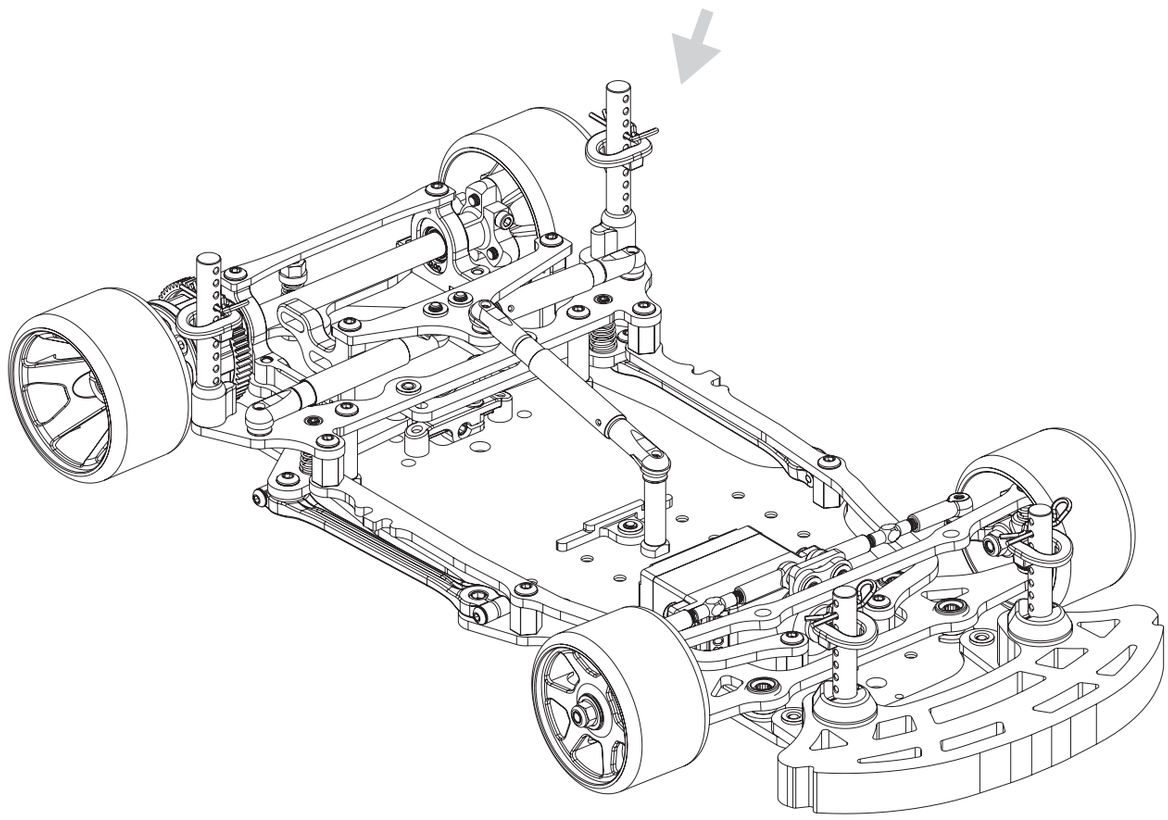

ATOM3

Step 18

A x2
M3 x 10 Cap Hd Screw

B x2
M3 x 0.5mm Washer

C x1
M3 x 6 Csk Hd Screw

D x1
M3 x 4 Grub Screw

See Track Settings on page 20 for a gear ratio chart.
The kit spur gear is 60T.
When using common 13.5T motors:
Small Club track rollout suggestion. 59mm/rev
Large National track rollout suggestion. 67.5mm/rev

To work out the rollout, first calculate the gear ratio.
This is Spur size / Pinion size. For example: 60/28=2.14
Then complete the following calculation.

$$\frac{\text{Tyre Diameter (example 44mm)} \times 3.142}{\text{Gear Ratio (example 2.14)}} = 64.6\text{mm/rev}$$

Many mobile phone 'Ratio Calculator' apps are available to help with this!

Adjust the gear mesh to be as close as possible without binding.

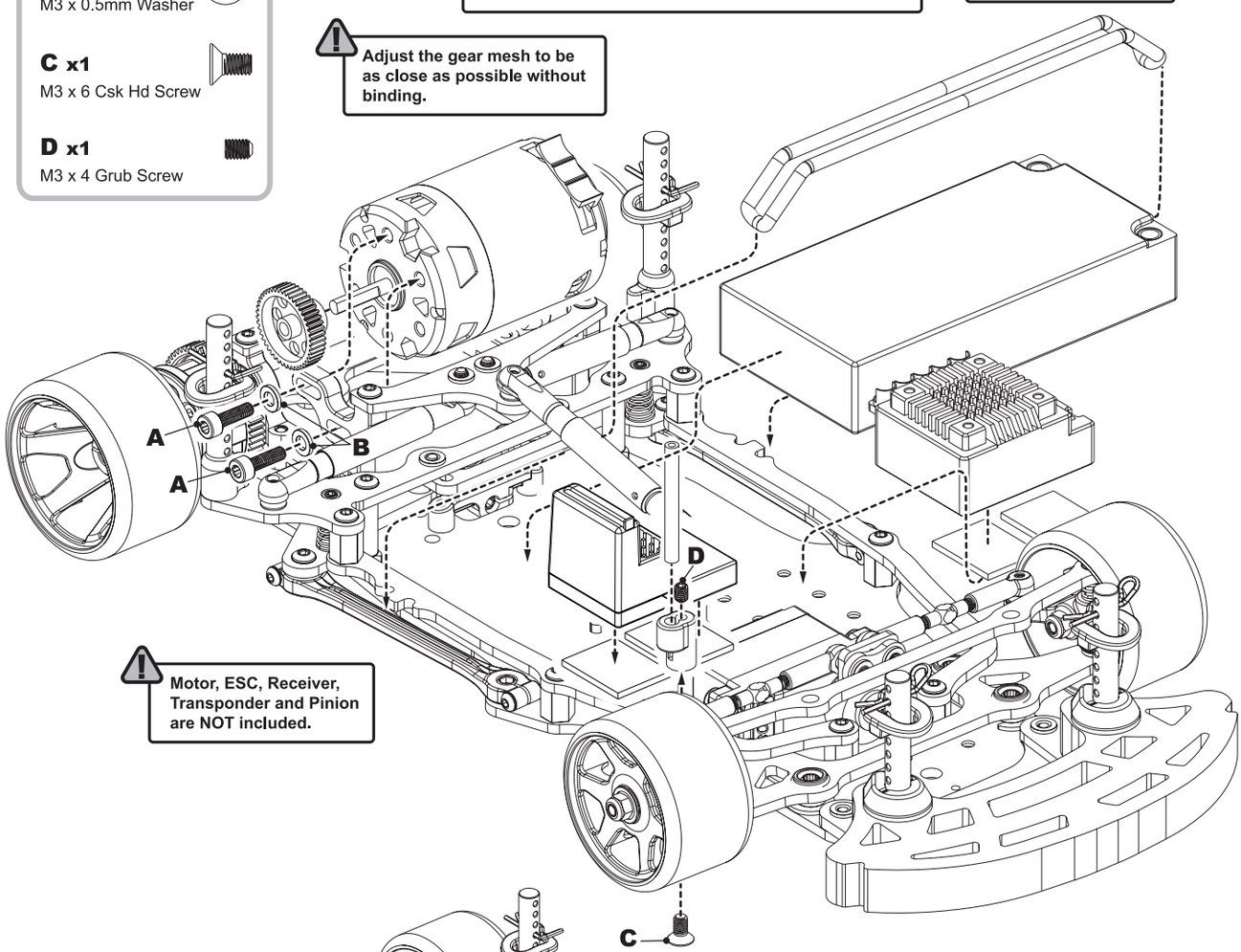

Motor, ESC, Receiver, Transponder and Pinion are NOT included.

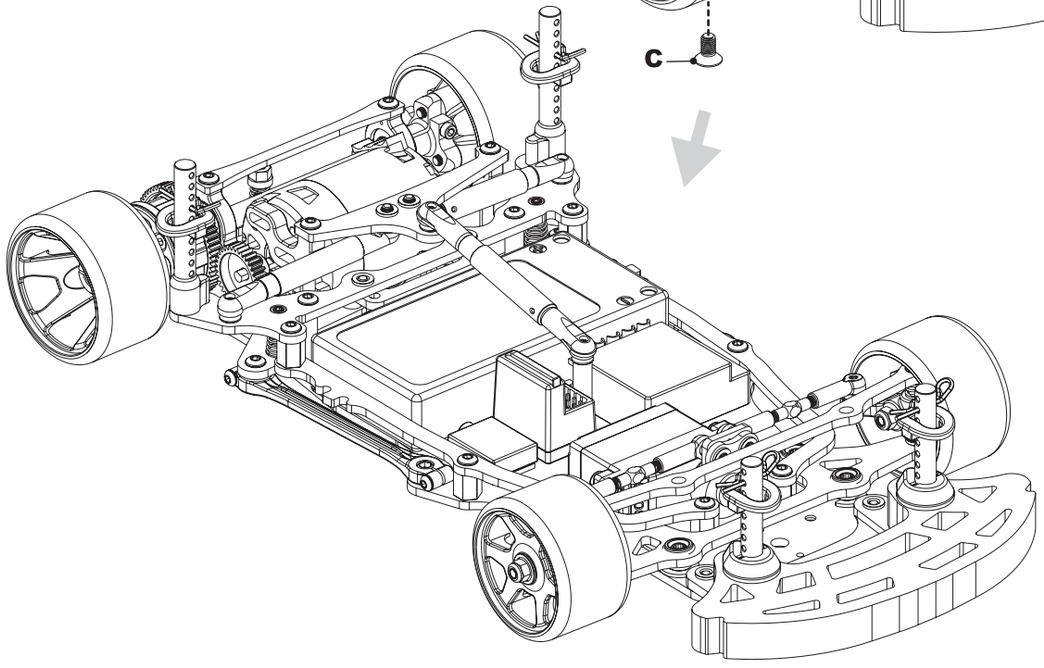

ATOM3

TRACK SETTINGS

RIDE HEIGHT & CASTOR

See Page 8 - Step 8 & Page 11 - Step 13

Front Ride Height & Castor Chart

Tyre Size	Ride Height	Castor	Spacer A	Spacer B	Spacer C*	Spacer D*	
40mm	3.2mm	3º	0.5mm	1.5mm	0.0mm	0.5mm	
41mm	3.2mm	3º	1.0mm	2.0mm	0.0mm	0.5mm	
42mm	3.2mm	3º	1.5mm	2.5mm	0.0mm	0.5mm	
43mm	3.2mm	3º	2.0mm	3.0mm	0.0mm	0.5mm	
44mm	3.2mm	3º	2.5mm	3.5mm	0.0mm	0.5mm	
40mm	3.2mm	4º	0.25mm	1.75mm	0.0mm	0.5mm	
41mm	3.2mm	4º	0.75mm	2.25mm	0.0mm	0.5mm	
42mm	3.2mm	4º	1.25mm	2.75mm	0.0mm	0.5mm	
43mm	3.2mm	4º	1.75mm	3.25mm	0.0mm	0.5mm	
44mm	3.2mm	4º	2.25mm	3.75mm	0.0mm	0.5mm	
40mm	3.2mm	5º	0.0mm	2.0mm	0.0mm	0.5mm	
41mm	3.2mm	5º	0.5mm	2.5mm	0.0mm	0.5mm	
42mm	3.2mm	5º	1.0mm	3.0mm	0.0mm	0.5mm	(Kit)
43mm	3.2mm	5º	1.5mm	3.5mm	0.0mm	0.5mm	
44mm	3.2mm	5º	2.0mm	4.0mm	0.0mm	0.5mm	

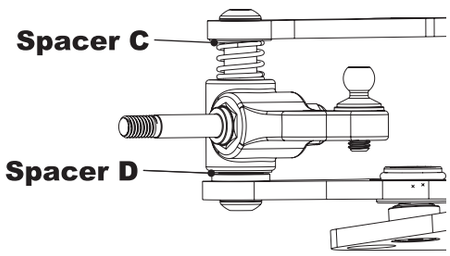

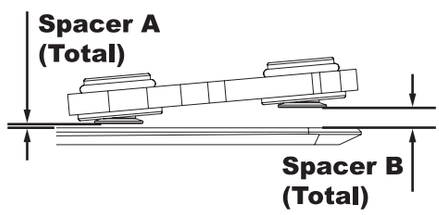

*One Black King Pin Spacer = 0.25mm

- Increasing spacer ‘C’ increases ride height.
- Changing spacer ‘D’ doesn’t affect ride height.
- Increasing spacer ‘C’ or ‘D’ decreases droop.

Rear

Use the eccentrics to adjust the rear ride height. Raising the axle lowers the ride height. Lowering the axle raises the ride height. The recommended ride height is 3.4mm on carpet. This is measured between the bottom of the chassis and the ground with the car in running trim. First press the car down on to the ground and release it once or twice to settle the suspension before adjusting the ride height. Kit Setting uses the 1.0mm insert with the diff axle in the high position.

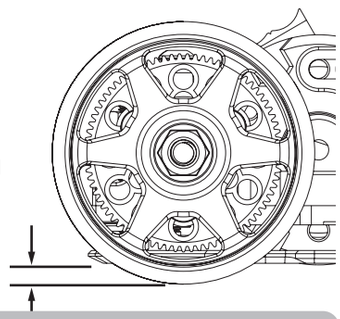

FRONT DAMPING

See Page 8 - Step 8

Front damping can be used to tune the car depending on the track traction levels. Like rear damping, in high traction track conditions, thinner oil is required, compared to low traction track conditions where thicker oil can improve the cars driveability.

Thicker oil on the kingpin generally always gives a less responsive, easier to drive car. Too thick oil on the kingpin may lead to a ‘lazy’ feeling car which lacks corner speed.

We suggest a wide range of possibilities here starting from 12,000cSt to 40,000cSt

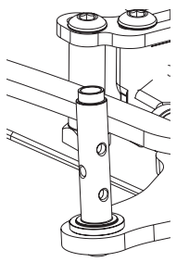

FRONT SPRINGS

See Page 8 - Step 8

Softer springs will ride the bumps better and generally allow the car to roll more which can increase steering, especially in the middle of the corner. Harder springs make the car more responsive and are more suitable for high grip tracks. They will generally increase initial steering but improve mid corner stability.

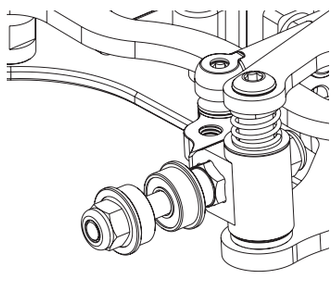

FRONT DROOP

See Page 8 - Step 8

Increasing Front Droop will make the car more agressive and have more front grip.
Decreasing front droop makes the car smoother and easier, at the expense of rotation.

Front droop is adjusted in 0.25mm steps using the shims on the kingpin.
They can be positioned above or below the hub carrier but please note that if placed above the hub carrier, the ride height will be decreased. Shims below will not change the height of the car, only the droop.
Kit setting 2 shims on both kingpins.

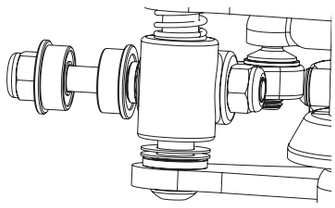

REAR ROLL (SIDE) SPRINGS

See Page 6 - Step 5

Roll springs are used to control the cars steering balance.
A softer spring will give an easier to drive car. Stiffer roll springs can be used to give a more aggressive steering car.
The standard setting has the roll springs uncompressed and both just touching the lower pod plate when the car is stationary.
Screwing them downward and compressing the springs creates more steering while loosening them gives an easier to drive car.

Adjusting the springs allows the tweak to be infinitely adjusted. Ensure they are not set too unevenly. If more than 0.5mm different, further investigation is required.

The Kit and most common setting is the black soft springs.

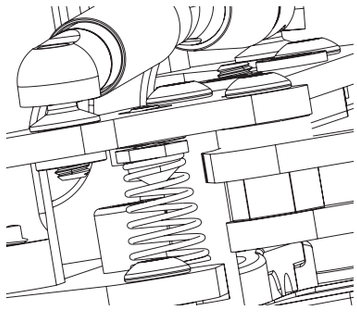

REAR ROLL DAMPING

See Page 11 - Step 11

Generally, in high traction conditions, thinner roll damping oil is better.
Low traction tracks may require thicker damping.

Thicker roll damping oil slows the weight transfer of the rear and makes the car easier to drive. Thicker oil can help if the track surface is bumpy and there are issues with bumps in the middle of the corner.

A good range is between 7,000cSt and 20,000cSt.

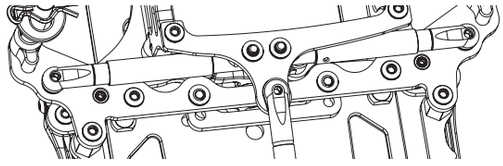

REAR BUMP (CENTRE) SPRING

See Page 5 - Step 4b

This spring is used to set the pod angle. Adjust the spring tension so that the pod is horizontal when the car is on a flat surface.

A softer bump spring will give a more aggressive car entering the corner, more rear grip in the corner and on exit. It will also improve the cars bump handling.

The Kit and most common setting is the red dot spring.

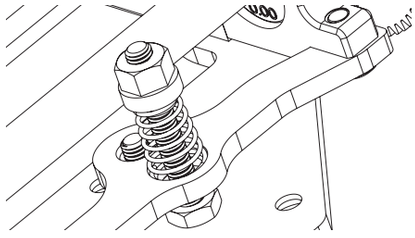

REAR DROOP

See Page 4 - Step 3 & 4

Rear droop adjusts the balance of the cars handling. Less droop makes the car more aggressive, squaring up the turns. More droop gives less corner rotation but an easier to drive car. More droop also improves the cars bump handling.
Start with 1mm of droop.
To set this, start with the droop screw fully screwed in and back it out to reduce droop. Measure this by measuring the cars rear ride height, then take all the weight off the car by lifting from the rear of the centre damper tube (the wheels must still just be touching the floor). Measure the chassis from the floor in this position and subtract the ride height to calculate the droop.

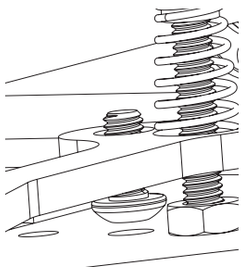

REAR BUMP DAMPING

See Page 11 - Step 11

Generally, in high traction conditions, thinner bump damping oil is better. Low traction tracks may require thicker damping.

Thicker bump damping oil slows the weight transfer of the rear and makes the car easier to drive when coming off power. Thicker oil can help if the track surface is bumpy and there are issues with bumps when the car is moving in a straight line.

A good range is betweeen 15,000cSt and 50,000cSt.

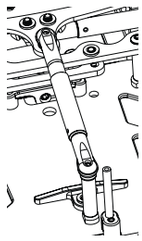

REAR ROLL CENTRE

When using the alloy speed secret pivot parts (U7918 and U7919) the roll centre can be adjusted by adding or removing spacers from below the alloy pivot mount and alloy pivot block.
Lowering the roll centre (removing spacers) will give the car more grip and increase chassis roll.
Raising the roll centre (adding spacers) will increase steering by making the car rotate more from the rear.
The alloy pivot mount and block need a 2mm spacer in order to maintain kit roll centre. Minimum, 0.5mm. (1.5mm lower than kit.)

You MUST have equal spacers beneath both parts.

Racers Tip: Using U7897 1mm Alloy Pivot Spacer can make this adjustment much easier. Please note: These must both be inserted from the front side.

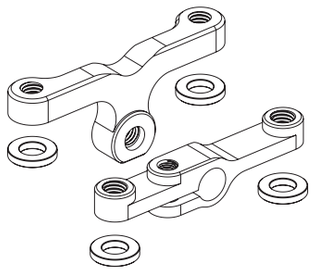

LIPO POSITION

The Atom 3 has 4 LiPo positions.
These are set using the 4 positions in the rear LiPo stop, along with swapping between 4 included front Lipo Stops. The kit setting is position 3.
-Moving the LiPo forwards - Smoother feeling with less initial response. Less forward traction. (Most forward LiPo is position 4).
-Moving the LiPo rearwards - A more aggressive initial response. Better forward traction. (Most rearward LiPo is position 1).

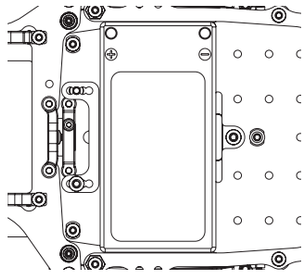

REAR TRACK WIDTH

Wider rear track width provides increased rear grip and an easier to drive car.
Narrower rear track width increases corner speed and steering making the car harder to drive.
Kit rear width has 1 x 0.5mm spacer on the right hand side and 2 x 0.5mm AND 1 x 2.0mm spacer on the left hand side.
Remove or add spacers to suit (equally on both sides).

Optional rear track width adjustment shims: U4971

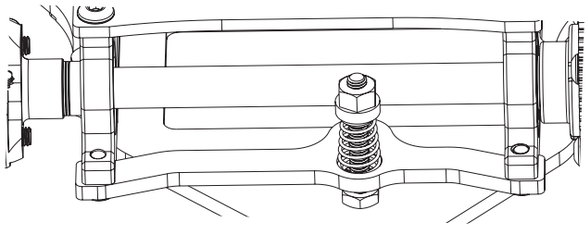

FRONT TOE

Parallel front wheels or a slight Toe-out (up to 1 degree per side) is our suggested setting range. Kit setting provides 1 degree of toe out.

Toe-out gives more initial steering. It does however make the car more difficult to drive on the straight, due to increased responsiveness.

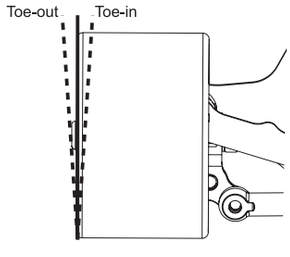

TYRES

The most important factor in racing is to get the tyres right. CONTACT foam tyres are designed for use on carpet tracks.

Shore hardness
28 30 32 35 40

Softer = more grip Harder = less grip

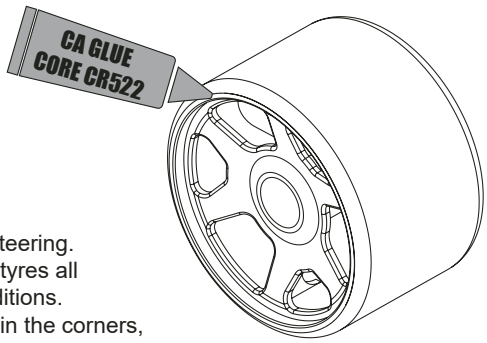

Use softer front tyres if you want more steering, and harder front tyres if you want less steering.
In high traction conditions sometimes you can have too much overall grip. Using harder tyres all round should make you faster through the corners with less traction rolling in these conditions.
If the track grip is not high enough, or the tyres are too hard, the car may slide and stop in the corners, if this is the case, reduce the shore rating until the track conditions change.

RACERS TIP
Kit setting is 44mm Rear, 42mm Front. This is a good all round tyre size, providing good grip, long life and an easy to drive car.
43mm Rear, 41mm Front tyres are a good starting point for very high grip, national type events.
If you have too much steering then add a thin layer of superglue (CORE Racing #CR522) to the outside edge of the front tyre to reduce the front tyre grip. This can be used to prevent grip roll.

CAMBER

Increasing the negative camber angle will increase the cars steering and aggression.
Reducing the negative camber angle is a good setting change if traction roll is a problem.
The Kit camber strap provides 1.0 degrees.
The Optional '1 Dot' camber strap gives 1.5° and more steering.

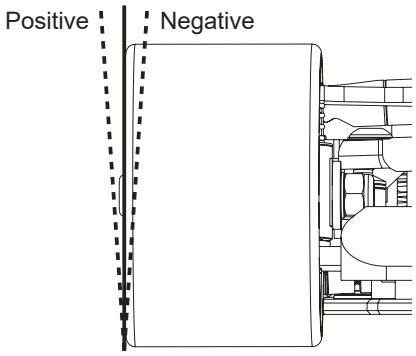

GEAR RATIO

First work out the gear ratio from the spur gear and pinion (For example 64/28 = 2.29).

Then complete the following equation.

$$\frac{43\text{ (tyre diameter)} \times \pi\ (3.142)}{2.29\text{ (gear ratio)}} = 59.10\text{mm/rev}$$

This chart shows the mm/rev figures for our suggested tyre size of 43mm, for a range of spurs and pinions

Minimum combined tooth sum = 80T
Maximum combined tooth sum = 92T

48DP Gears

	14	15	16	17	18	19	20	21	22	23	24	25	26	27	28	29	30	31	32
60							45.03	47.28	49.53	51.78	54.04	56.29	58.54	60.79	63.04	65.29	67.54	69.80	72.05
64			33.77	35.88	37.99	40.10	42.22	44.33	46.44	48.55	50.66	52.77	54.88	56.99	59.10				
66	28.66	30.70	32.75	34.80	36.84	38.89	40.94	42.98	45.03	47.08	49.12	51.17	53.22						
69	27.41	29.37	31.32	33.28	35.24	37.20	39.16	41.11	43.07	45.03									
70	27.02	28.95	30.88	32.81	34.74	36.67	38.60	40.53	42.46										
72	26.27	28.14	30.02	31.90	33.77	35.65	37.52												

ATOM3

SPARES LISTS

Chassis Parts

U119 Aerial Tube - Pack 4
U4773 Aerial Mount
U4950 Body Posts 4pcs - E1-E4,A2,FT,ST,Icon/2
U4964 C/F - Pod Rear Brace - E1-E4
U7488 Lipo O Ring pk6 - E2,Icon/2
U7874 Bumper Support - Atom 2 (pr)
U7882 Foam Bumper - Atom 2
U7907 S2 LiPo Stops - Atom 2
U7913 C/F Rear Lipo Stop - A2,E3,E4
U8141 C/F Pod Base - Eclipse 4
U8143 C/F Damper Mount - Eclipse 4
U8370 C/F Chassis - Atom 3
U8371 S2 Chassis - Atom 3
U8372 C/F Beam - Atom 3
U8373 S2 Beam - Atom 3
U8374 C/F Camber Strap 1.0 Deg (Kit) - Atom 3
U8375 S2 Camber Strap 1.0 Deg (Kit) - Atom 3
U8376 Hub Carriers (pr) - Atom 3
U8463 C/F Multi Mount - Atom 3
U8464 C/F Topdecks - Eclipse 5
U8468 Moulded Chassis Post (4 pcs) - Eclipse 5
U8469 Servo Post (pr) - Eclipse 5
U8472 Front LiPo Stop Pos 2 - Eclipse 5
U8473 Front LiPo Stop Pos 3 - Eclipse 5
U8474 Front LiPo Stop Pos 4 - Eclipse 5
U8477 25T Servo Saver - Eclipse 5
U8478 23T Servo Saver - Eclipse 5
U8482 C/F Front End Spacer 1.0mm (4 pcs) - Eclipse 5
U8483 Front LiPo Stop Pos 1 - Eclipse 5
U8485 C/F Bumper Mount - Atom 3
U8487 C/F Rear Spring Hanger - Atom 3
U8490 S2 Pod Base - Atom 3
U8491 S2 Damper Mount - Atom 3
U8492 S2 Rear Spring Hanger - Atom 3
U8493 S2 Bumper Mount - Atom 3
U8494 S2 Topdecks - Atom 3
U8495 S2 Multi Mount - Atom 3
U8496 S2 Front End Spacer 1.0mm (4 pcs) - Atom 3
U8507 Manual - Atom 3
U8513 S2 Pod Rear Brace - Atom 3

Bearings & Balls

U1439 Ball Bearing - 5x9x3 Shield - (pr)
U3387 Ceramic Bearing - 5x9x3 Sheild - (pr)
U4809 Ball Bearing - 1/4x3/8x1/8 Shield - (pr)
U4980 Ball Bearing - 1/4x3/8x1/8 Flanged Yellow - (pr)
U4981 Ball Bearing-1/8x5/16 Flanged Yellow -(pr)

Suspension

U4274 Pro Ball Stud Short - pk4
U4302 Ball Socket Short (Black) pk4
U4547 Ball Sockets Long Pro Black pk8
U4627 Chassis Post Long - SS GT,A1,A2,E1-E4,Icon/2
U4847 Rear Spring Seat - A1,A2,E1-E4,Icon/2
U4851 Side Spring Seat pr - A1,A2,E1-E4,Icon/2
U4968 Ball Sockets Low Profile -Eclipse,PC - pk4
U4972 Ride Height Adjusters- 0.00-1.50 4prs - E1-E4,Ic/2
U4973 Ride Height Adjusters 0.25-1.75 4prs - E1-4,Ic/2
U7302 Low Profile Front Axle - A1,A2
U7787 Shock Top Ball Dia 5.5mm - Mi7,Icon 2 (pk4)
U7832 Ball Stud Low (Ultra Short) (pk4)
U7833 Ball Stud Low (Short) (pk4)
U7871 Pivot Mouldings - A2,E3,E4,Icon/2
U7872 Side Link pr - A2,E3,E4,Icon/2
U8087 Alloy Damper Body - Icon/2, E4
U8150 King Pin - Eclipse 4 (pr)
U8264 Alloy M3 Turnbuckle - 35mm - Black (pr)
U8337 Damper Rod V2 - Icon/2, E4
U8470 Chassis Post 21.1mm - Eclipse 5
U8475 Front Pivot Ball (pr) - Eclipse 5

Springs

U4838 Rear Springs Black - Soft pr - A1,A2,E1-E4,Icon/2
U4839 Rear Springs Silver - Med/Soft pr-A1,A2,E1-E4,Ic/2
U4840 Rear Springs Gold -Med/Hard pr - A1,A2,E1-E4,Ic/2
U4841 Rear Springs Nickel - Hard pr - A1,A2,E1-E4,Icon/2
U4842 Front Springs Black - Soft pr - A1,E2-E4
U4843 Front Springs Silver - Medium pr - A1,E2-E4
U4844 Front Springs Gold - Hard pr - A1,E2-E4
U4845 Spring Tuning Set Front - A1,E2-E4
U4846 Spring Tuning Set Rear - A1,A2,E1-E4,Icon/2U7322
U4847 Rear Spring Seat - A1,A2,E1-E5,Icon/2
U7322 Rear Spring Red Dot-Hard Ultra pr-A1,A2,E1-E5,Ic/2
U7323 Rear Spring Black - Ultra pr - A1,A2,E1-E3,Ic/2,E4
U7489 Front Springs White - Ultra pr - A1,E2,E3,E4
U8130 Mass Damper Spring - Red - Medium (pr)
U8131 Mass Damper Spring - Green - Hard (pr)

Transmission

U4112 S/Steel Shims 1/4x5/16x0.004-SS/At/Ecl
U4853 LH Drive Clamp - A1,A2
U7483 Trans Housing LH - A2,E2,E3,E4
U7484 Trans Housing RH - A2,E2,E3,E4
U7899 Diff Spacer Set - A2,E4,Icon/2
U8339 Gear Diff Mouldings - Icon 2
U8341 Gear Diff Spur Gear 60T 48DP - Icon 2
U8342 Steel Gear Diff Axle - Icon 2
U8344 Gear Diff Rebuild Kit - Icon 2
U8361 Gear Diff Wheel Hub RH Side - Atom
U8484 Gear Diff Output Shaft - Atom 3

Hardware

U3021 SPEED PACK - M3x6 Csk Hd - (pk10)
U3022 SPEED PACK - M3x8 Csk Hd - (pk10)
U3023 SPEED PACK - M3x10 Csk Hd - (pk10)
U3131 SPEED PACK Alloy Spacers - M3x7mm 0.5;1;2mm (pk18)
U3572 SPEED PACK - M3x14 Grub Screw pk4
U3753 SPEED PACK - M2.5x6 Button Hd pk8
U4124 SPEED PACK - Shims 5 x 7 x 0.4mm - pk6
U4241 SPEED PACK - M3 Alloy Nyloc Nuts - Black - pk10
U4314 SPEED PACK - Alloy Black M3 Washers - 18pc
U4351 SPEED PACK - Shims 3.2x6x0.1mm - pk8
U4650 SPEED PACK - M3 Nyloc Nut Steel - Black (10pcs)
U4835 SPEED PACK - M3 Steel Nut Black (pk8)
U4837 SPEED PACK M2.5x10 Cap Hd (pk8)
U4862 Black Alloy Washers 0.50mm (pk12)
U4983 SPEED PACK Servo Screws (2pcs)
U4984 SPEED PACK M3 Alloy Nuts - Black - pk10
U4987 SPEED PACK Needle Roller 1.5x11.8 (pk8)
U7102 SPEED PACK - M3x4 Button Hd (pk10)
U7103 SPEED PACK - M3x6 Button Hd (pk10)
U7104 SPEED PACK - M3x8 Button Hd (pk10)
U7105 SPEED PACK - M3x10 Button Hd (pk10)
U7112 SPEED PACK - M3x8 Cap Hd (pk10)
U7113 SPEED PACK - M3x10 Cap Hd (pk10)
U7125 SPEED PACK - M3x25 Csk Hd (pk10)
U7677 SPEED PACK - M2.5x8 Csk Hd (pk10)
U7689 M3 Brass Inserts - pk10
U7707 M3 Steel Washers (pk10)
U7743 M2.5 X 8 Button Screws (pk10)
U7884 M3x6 Grub Screw Dome End Patched (pk4)
U7900 SPEED PACK Needle Roller 1.5x9.8 (pk10)
U8133 6 x 1 'O'ring pk10 - Mi7,Icon/2,E4,Mi8
U8336 Pro Body Clips (pk 10)
U8345 O'Ring 5x1.5 Red (pk 10)
U8476 Droop Spacer (pk 10) - Eclipse 5
U8510 Decal - Atom 3

Option Parts

CR508 Kimbrough - Precision Gear 64T-48DP-#300
CR510 Kimbrough - Spur Gear 66T - 48DP - #301
CR511 Kimbrough - Spur Gear 69T - 48DP - #150
CR512 Kimbrough - Spur Gear 72T - 48DP - #143
CR724 GT12 Carbon Spool Axle + Clamp V2
CR868 Threaded Square 5g Weight - (pk4)
CR869 Threaded Rectangular 7.5g Weight - (pk4)
CR870 Threaded Weight Set 110g - Atom 3
U1954 Pro - Thrust Bearing
U3582 Precision Balance Pivot Set
U4057 Spur Gear 48DP - 70T - SS/GT,A1,A2
U4298 Turnbuckle HT - 35mm - pr
U4328 Impact Servo Saver - Mi5-Mi7,FT,E4,Icon/2
U4855 Diff Washer pr - A1,A2,E1-E4,Icon/2
U4856 RH Washer Carrier - A1,A2
U4861 Diff Rebuild Kit - E1-E4,A2,Icon/2
U4970 C/F Rear Axle - E1-E4,Icon/2
U7298 Alloy Rear Wheel Screws pk6 - A1,A2,E1-E4
U7486 Alloy Servo Mounts - E2,E3,E4
U7690 Pro Ball Bearings 1/4 x 3/8 x 1/8 FI Shielded
U7691 Pro Ball Bearings 1/8 x 5/16 x 9/64 FI Shielded
U7729 Pro-Ball Bearing 5x9x3 Sealed - (pr)
U7883 Steel Diff Axle - A2,E3,E4,Icon/2
U7897 Alloy Pivot Spacer 1mm pr - A2,E3,E4,Icon/2
U7918 Alloy Pivot Mount - A2,E3,E4,Icon/2
U7919 Alloy Pivot Block - A2,E3,E4,Icon/2
U7920 Alloy Ride Height Spacer 0.5mm - Atom 2 (pk4)
U7921 Alloy Ride Height Spacer 0.75mm - Atom 2 (pk4)
U7933 Alloy Hub Carrier pr - E3,E4
U7936 Titanium King Pin pr - E3,E4
U7938 Chassis Post 8mm pr - E3,E4,Icon/2
U8065 M3 Alloy Thread Inserts pk8-L1,Mi7,8,E3,E4,A2,Ic/2
U8147 Hex Wheel Clamp - Atom 2
U8172 GT12 Hex Lightweight Spool Set
U8353 C/F Gear Diff Axle - Atom/2,Icon/2
U8357 Machined Spur Gear 64t 48DP - Icon 2
U8486 C/F Camber Strap 1.5 Degree - Atom 3
U8489 Alloy 30mm Fan Mount - Atom 3
U8499 C/F Side Lipo Stop (No Topdeck Option) - Atom 3
U8511 C/F 30mm Fan Mount (Vertical Fixing) - Atom 3



CR510 - *Kimbrough - Spur Gear 66T - 48DP - #301*
CR511 - *Kimbrough - Spur Gear 69T - 48DP - #150*
CR512 - *Kimbrough - Spur Gear 72T - 48DP - #143*
U4057 - *Spur Gear 48DP - 70T - SS GT*



U7315 - *Titanium Turnbuckle - 35mm - Silver - pr*



U7829 - *Titanium Ball Stud Low (Short) (pk4)*

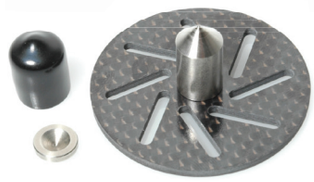

U3582 - *Precision Balance Pivot Set*



U4327 - *Alloy Servo Mount Black - K1/Mi5*



CR280 - *Ti Pro Ball Studs - Short - (pr)*
CR281 - *Ti Pro Ball Studs - Ultra Short - (pr)*
CR282 - *Ti Pro Ball Studs - Long - (pr)*



U7298 - *Alloy Rear Wheel Screws - Atom/Eclipse (pk6)*



CR310 - *Alloy Csk Hex Screws M3 x 6 pk10*
CR311 - *Alloy Csk Hex Screws M3 x 8 pk10*
CR312 - *Alloy Csk Hex Screws M3 x 10 pk10*
CR314 - *Alloy Button Head Hex Screws M3 x 6 pk10*
CR315 - *Alloy Button Head Hex Screws M3 x 8 pk10*
CR316 - *Alloy Button Head Hex Screws M3 x 10 pk10*
CR317 - *Alloy Button Head Hex Screws M3 x 12 pk10*

OPTION PARTS



U4838 - *Rear Springs Black - Soft - At/Ecl - pr*
U4839 - *Rear Springs Silver - Med/Soft - At/Ecl - pr*
U4840 - *Rear Springs Gold -Med/Hard - At/Ecl - pr*
U4841 - *Rear Springs Nickel - Hard - At/Ecl - pr*
U4846 - *Spring Tuning Set Rear - At/Ecl*
U7322 - *Rear Spring Red Dot-Hard/Ultra-Atom/Eclipse-pr*
U7323 - *Rear Spring Black - Ultra - Atom/Eclipse - pr*

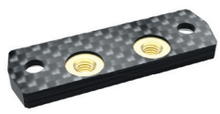

U8511 - *C/F 30mm Fan Mount (Vertical Fixing) - Atom 3*



U4812 - *Ceramic Bearing 1/8x5/16x9/64 Flanged (pr)*
U4979 - *Ceramic Bearing 1/4 x 3/8 x 1/8 Flanged (pr)*
U7690 - *Pro Ball Bearings 1/4 x 3/8 x 1/8 Fl Sheilded*
U7691 - *Pro Ball Bearings 1/8 x 5/16 x 9/64 Fl Sheilded*



U8489 - *Alloy 30mm Fan Mount (Horizontal Fixing) - Atom 3*



U7825 - *Titanium Pivot Ball 5.5mm Low (pr)*



U7920 - *Alloy Ride Height Spacer 0.5mm - Atom 2 (pk4)*
U7921 - *Alloy Ride Height Spacer 0.75mm - Atom 2 (pk4)*



CR722 - *Threaded Steel 5g Weight 13.50mm (pk4)*
CR723 - *Threaded Steel 10g Weight 17.60mm (pk4)*

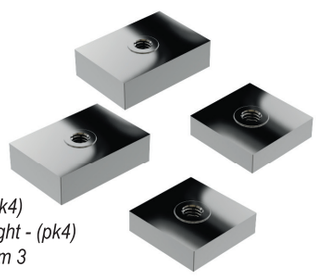

CR868 - *Threaded Square 5g Weight - (pk4)*
CR869 - *Threaded Rectangular 7.5g Weight - (pk4)*
CR870 - *Threaded Weight Set 110g - Atom 3*



U7919 - *Alloy Pivot Block - Atom 2*

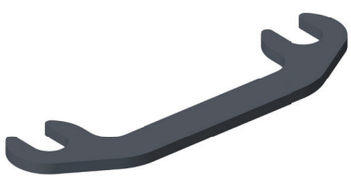

U7897 - *Alloy Pivot Spacer 1mm - Atom 2 (pr)*

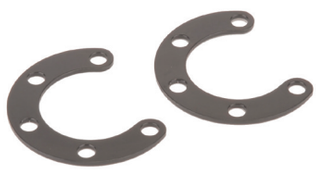

CR664 - *Alloy Motor Spacer - 1mm - pk2*



U7918 - *Alloy Pivot Mount - Atom 2*



U8499 - C/F Side Lipo Stop (No Topdeck Option) - Atom 3