Schumacher

BossCat

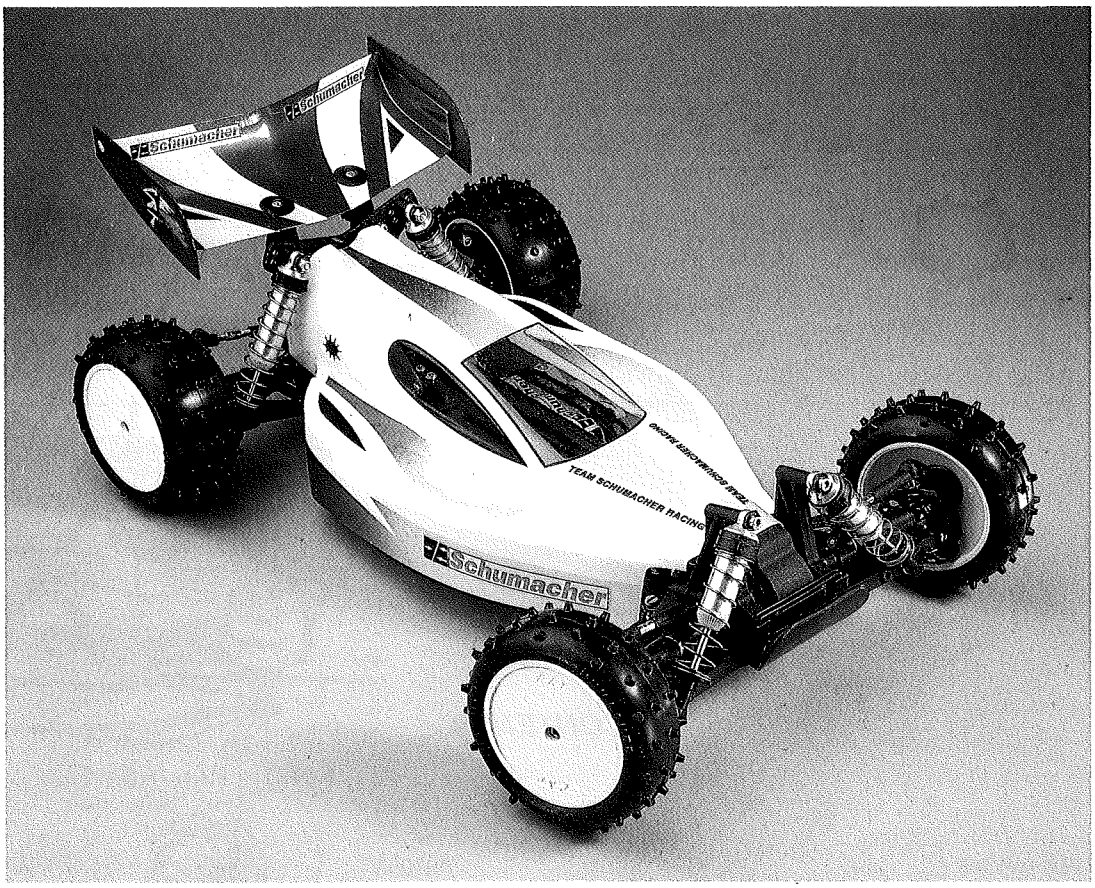

INSTRUCTION MANUAL

* *FULLY DETAILED CONSTRUCTION DIAGRAMS*
* *TRACK SETTINGS AND RACE TUNING TIPS*

DESIGNED AND MANUFACTURED BY:

Schumacher

HANSON BUSINESS PARK, 71-73 TENTER ROAD
MOULTON PARK, NORTHAMPTON. NN3 1AX
ENGLAND

PERFORMANCE AND TECHNOLOGY YOU CAN BUY

Schumacher

BossCat

Congratulations on choosing a BOSSCAT.

The BOSSCAT is a true competition bred off road racer designed so that adjustments can be made to suit different track conditions and driving styles. Extensive development of new materials and the complete re-design of many new parts, together with straight forward modular construction and clear concise instructions will give experts and beginners alike superb reliability and performance.



CONTENTS

REAR DIFFERENTIAL & TRANSMISSION	2-6
FRONT DIFFERENTIAL	6-7
FRONT SUSPENSION	8-10
REAR SUSPENSION	11
SHOCK ABSORBERS	12-14
WHEELS & TYRES	15
FITTING ELECTRICS	16
BODYSHELL	17-18
TRACK SETTINGS	19-21

In line with our policy of continous development the exact specification of the kit may vary.

MISSING OR DEFECTIVE PARTS

In the unlikely event of problems with your new kit you should contact the model shop where purchased, quoting part number, bag number and batch number for both the bag and the kit.

SCHUMACHER RACING PRODUCTS

HANSON BUSINESS PARK . 71-73 TENTER ROAD . MOULTON PARK . NORTHAMPTON . NN3 1AX

ISSUE 2

IMPORTANT SAFETY NOTES

1. This product is not suitable for children under 14 years of age unless supervised by an adult.
2. Select an area for assembly that is away from reach of small children. The parts are small and can be swallowed by children causing choking and possible internal injuries.
3. Shock fluids, grease and adhesives should be kept out of childrens reach. They are not toxic, but were not intended for human consumption.
4. Exercise care when using any hand tools, sharp instruments and power tools during construction.
5. Carefully read all manufacturers warnings and cautions for any glues or paints that may be used for assembly purposes.

THREADLOCK

Places to put threadlock. (It will prevent the screws and nuts vibrating loose.

GREASE

Points where silicone grease (MS 1 or equivalent) should be applied. (It will reduce friction and assure smooth movement.)

OIL

Points where oil should be applied (Light machine oil, 3 in 1 or similar.)

Do not use excessive force when tightening the self-tapping screws, or you may strip the thread in the plastic. It is recommended to stop tightening it when the threaded part on the screw goes into the plastic part and you feel some resistance from the tightening.

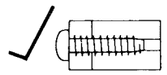

Good

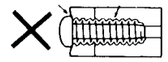

Overtighten and may strip the thread in the plastic

ADDITIONAL ITEMS REQUIRED

Transmitter

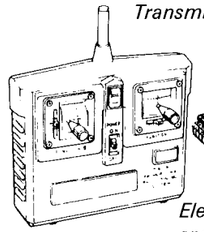

Servo

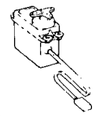

Receiver



(Battery for Radio system)

AA Size Battery (For Transmittor .... 8 pcs.)

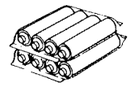

Electronic speed controller

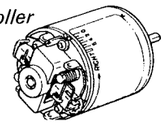

540 Type Motor



7.2V racing battery

FOR BEST PERFORMANCE, IT IS VERY IMPORTANT THAT GREAT CARE IS TAKEN TO ENSURE THE FREE MOVEMENT OF ALL PARTS.

TOOLS REQUIRED FOR ASSEMBLY

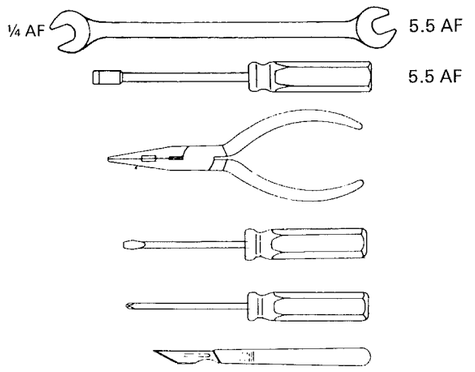

MATERIALS REQUIRED

Threadlock
Light oil for shock absorbers
Polycarbonate paint for bodyshell
Grease

Ruler INCHES & MILLIMETRES

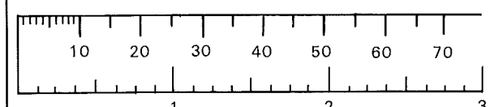

REAR DIFFERENTIAL

1

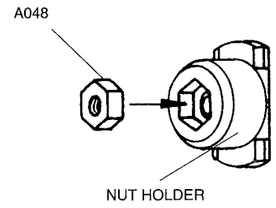

2

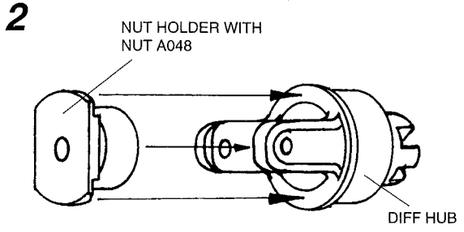

Schumacher BossCat

TRANSMISSION

3 **PRO - DIFF**

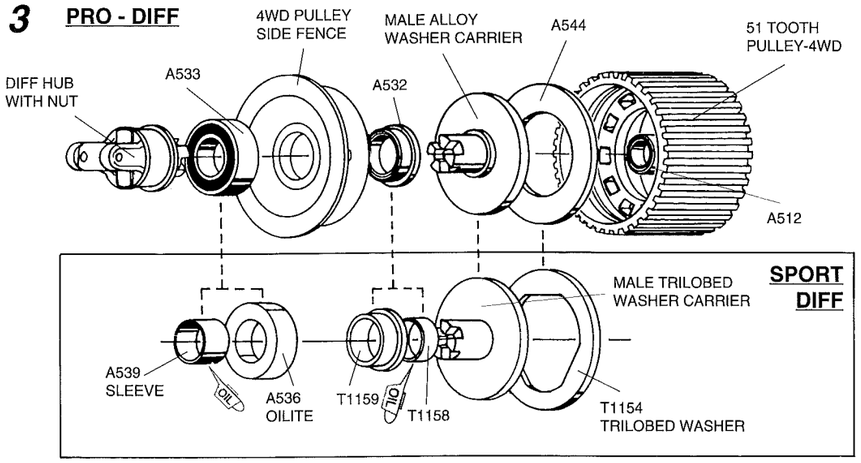

4

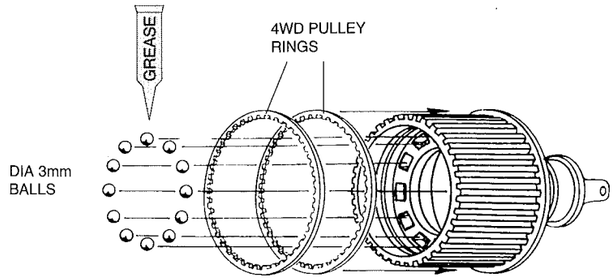

5 **PRO - DIFF**

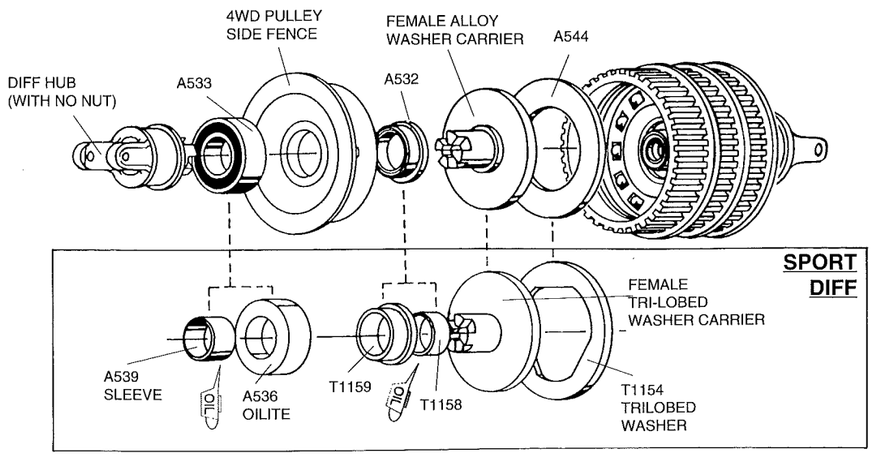

HARDWARE

- x 1 — *A048 M3 NUT*
- x 12 — *3mm Dia. BALL*
- x 2 — *A533 BALLRACE*
- x 2 — *A532 BALLRACE FLANGED*
- x 1 — *A512 BALLRACE*
- x 1 — *A544 DIFF. WASHER*
- x 2

BOSSCAT SPORT ONLY

- x 2 — *T1154 TRI-LOBED WASHER*
- x 2 — *A539 BEARING SLEEVE*
- x 2 — *A536 OILITE BEARING*
- x 2 — *T1158 BUSH*
- x 2 — *T1159 BUSH*

6

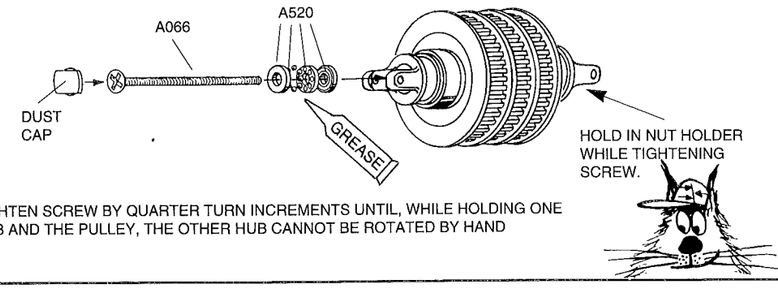

TIGHTEN SCREW BY QUARTER TURN INCREMENTS UNTIL, WHILE HOLDING ONE HUB AND THE PULLEY, THE OTHER HUB CANNOT BE ROTATED BY HAND

7

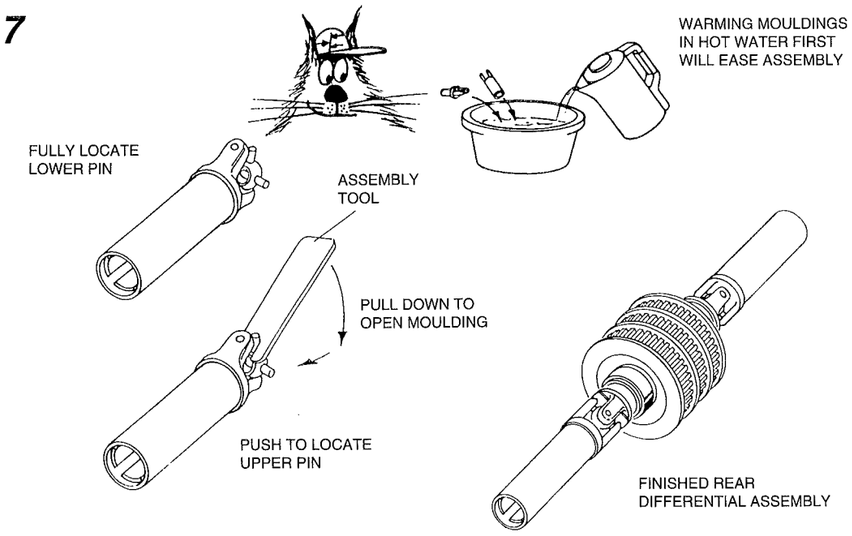

8

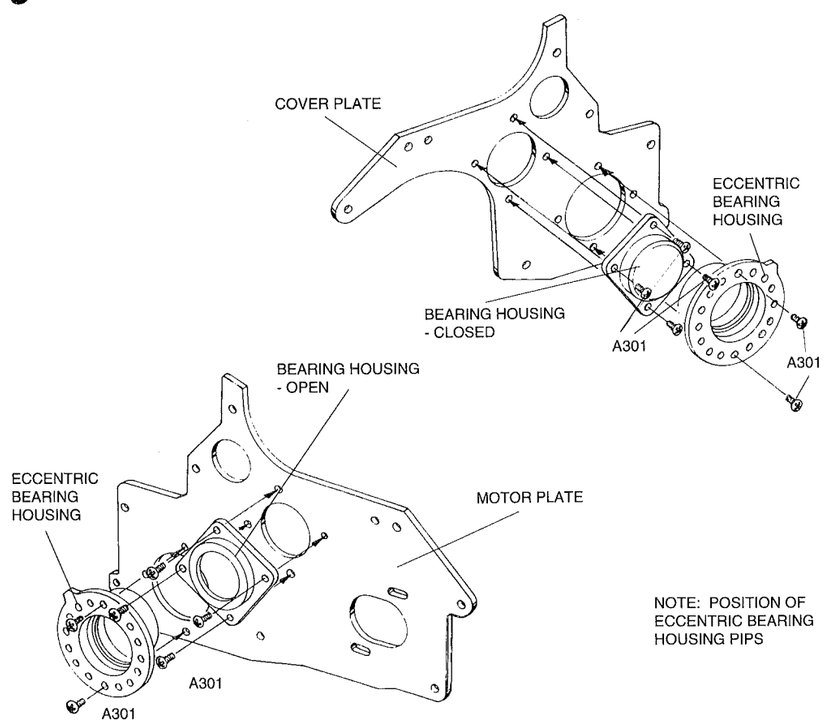

NOTE: POSITION OF ECCENTRIC BEARING HOUSING PIPS

Schumacher BossCat

TRANSMISSION

HARDWARE

- x 1 — *A066 M3 x 45 COUNTERSUNK SCREW*
- x 2, x 8, x 1 — *A520 THRUST RACE ASSEMBLY*
- x 4 — *T108 UNIVERSAL JOINT*
- x 12 — *A301 No.2 x 3/16" PANHEAD SCREW*

9

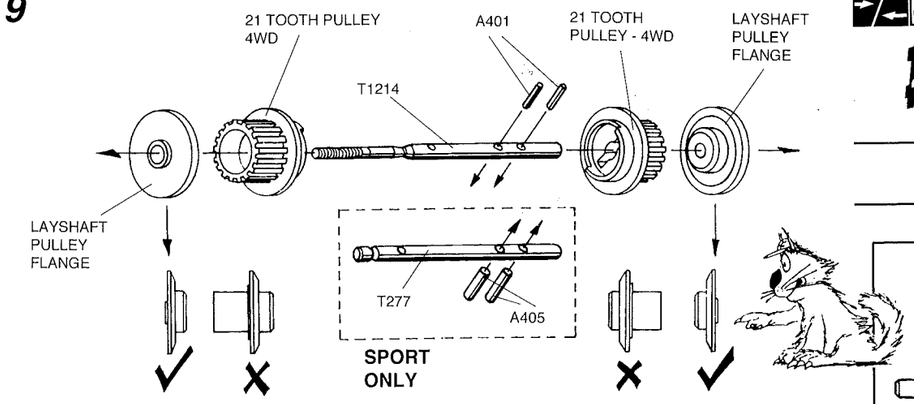

10

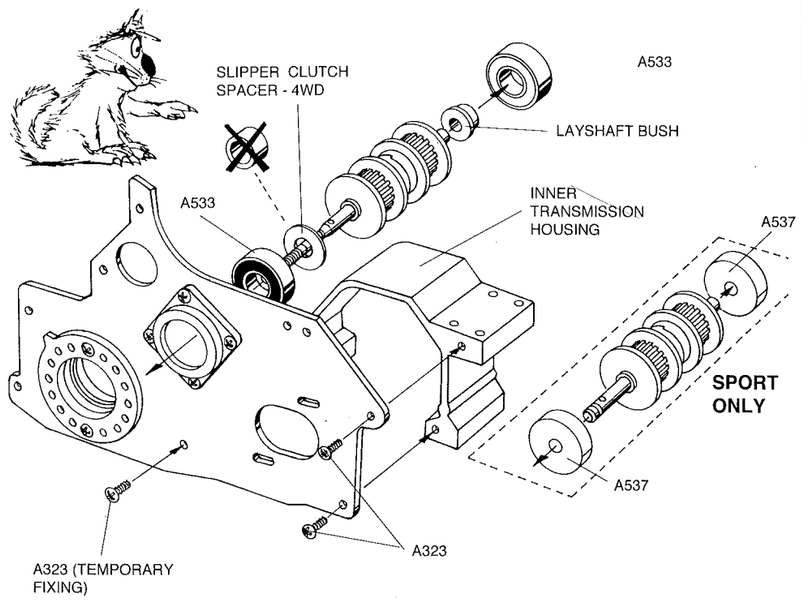

11

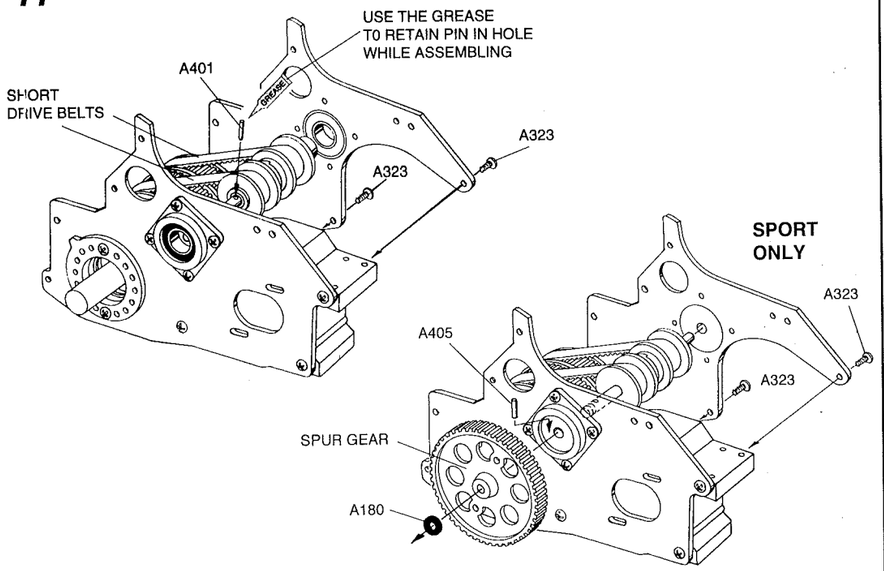

Schumacher BossCat

TRANSMISSION

HARDWARE

x 1 — *T1214 SLIPPER LAYSHAFT*

x 3 — *A401 1.5mm Dia. PIN*

x 2 — *A533 BALLRACE*

x 6 — *A323 No.4 x 3/8 SELFTAP SCREW*

x 1 — *T1264 LAYSHAFT BUSH 4WD*

x 1 — *SLIPPER CLUTCH SPACER - 4WD*

BOSSCAT SPORT ONLY

x 1 — *T277 LAYSHAFT*

x 3 — *A405 2.0mm DIA. PIN*

x 2 — *A537 OILITE BEARING*

x 1 — *A180 'O' RING*

12 FITTING SLIPPER CLUTCH (NOT INCLUDED IN BOSSCAT SPORT)

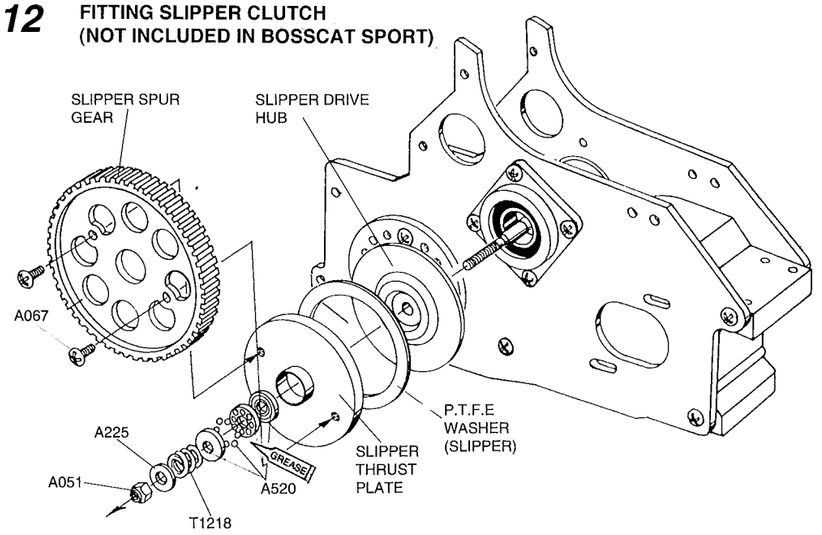

13 BELT TENSION ADJUSTMENT

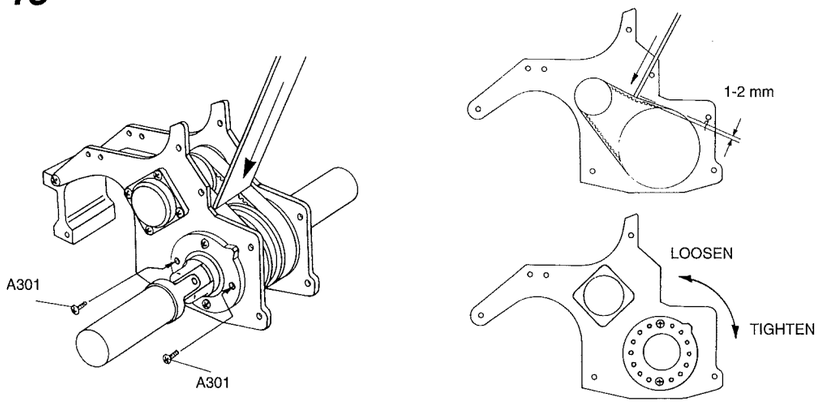

14 BELT COVERS CAN BE FITTED AT THIS POINT. SEE PAGE 18 STEP 3.

(NOTE: ENSURE 'H' SECTION BULKHEADS CORRECT POSITIONED) -FRONT BULKHEAD IS SMALLER IN HEIGHT THAN REAR

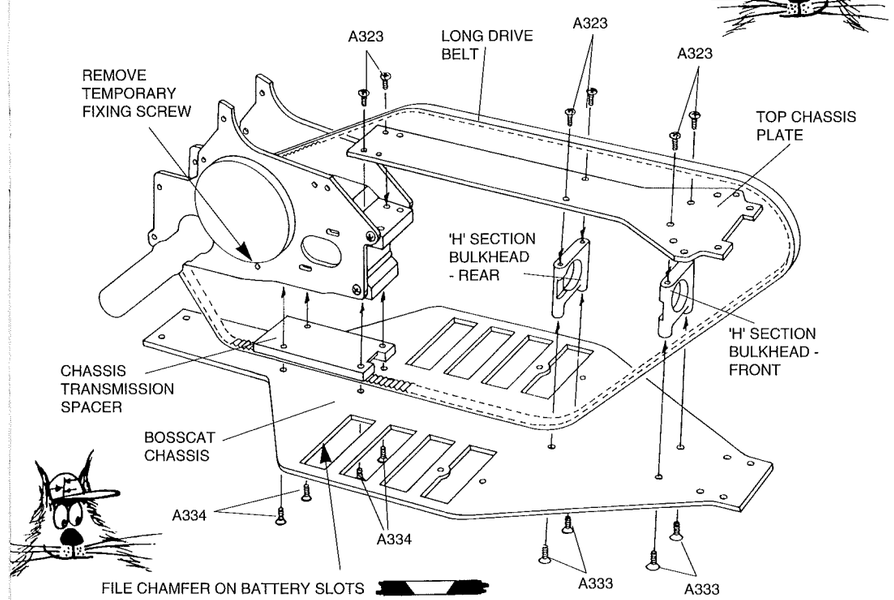

WARNING: CARBON FIBRE IS CONDUCTIVE.
ENSURE THAT NICADS ARE INSULATED FROM CHASSIS.

Schumacher BossCat

TRANSMISSION

HARDWARE

x 6 — *A323 No.4 x 3/8" SELFTAP SCREW*

x 2 — *A301 No.2 x 3/16" PANHEAD SCREW*

x 2 / x 8 / x 1 — *A520 THRUST RACE ASSEMBLY*

x 1 — *T1218 SPRING SLIPPER CLUTCH*

x 1 — *A225 M3 STEEL WASHER*

x 1 — *A051 M3 NYLOC NUT*

x 2 — *A067 M3 x 4mm PANHEAD SCREW*

x 4 — *A333 No.4 3/8" SELFTAP COUNTERSUNK SCREW*

x 4 — *A334 No.4 x ½" SELFTAP COUNTERSUNK SCREW*

15

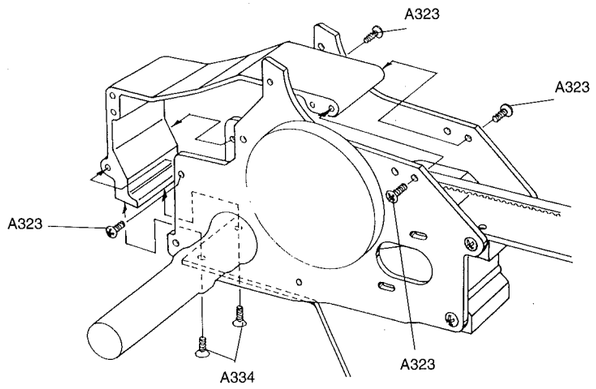

16 FRONT DIFFERENTIAL

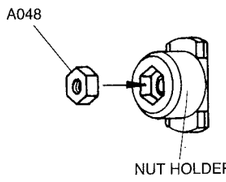

17

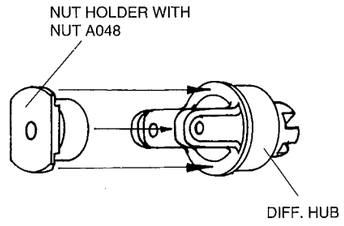

18

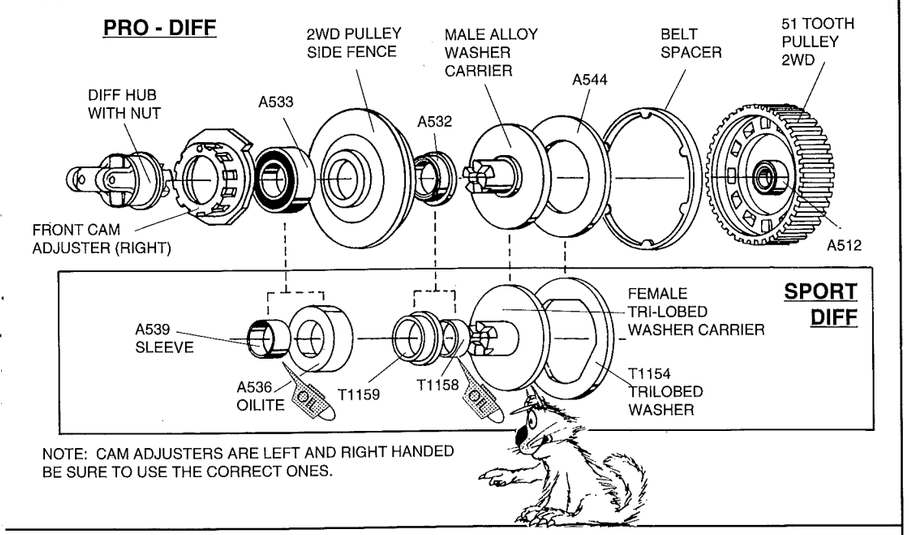

19

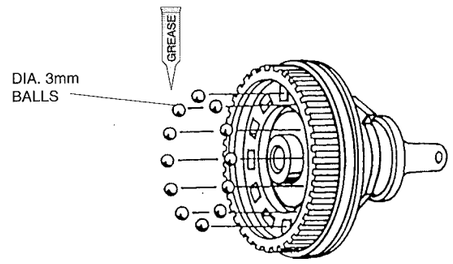

Schumacher BossCat

TRANSMISSION

HARDWARE


x 1 — *A048 M3 NUT*


x 12 — *Dia. 3mm BALL*


x 2 — *A533 BALLRACE*


x 2 — *A532 FLANGED BALLRACE*


x 1 — *A512 BALLRACE*


x 4 — *A323 No.4 x 3/8" SELFTAP SCREW*


x 2 — *A334 No.4 x ½" COUNTERSUNK SELFTAP SCREW*

20 PRO - DIFF

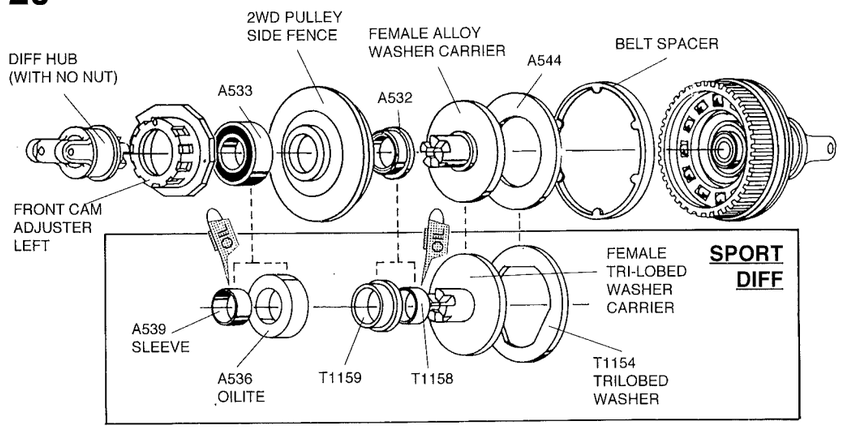

21

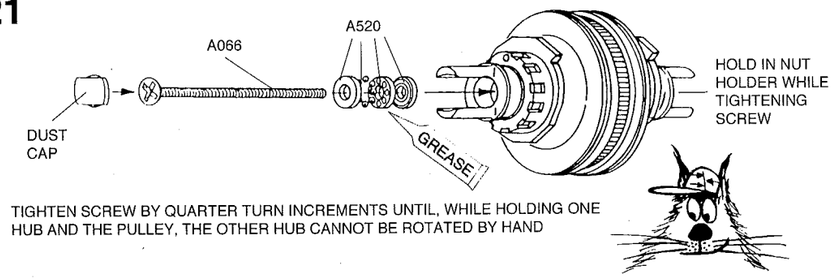

22

FIT UNIVERSAL JOINTS (AS STEP 7) AND ONE WAY DRIVE SHAFTS (ASSEMBLED IN KIT)
NOTE: BOSSCAT SPORT DOES NOT HAVE ONE WAY DRIVE SHAFTS

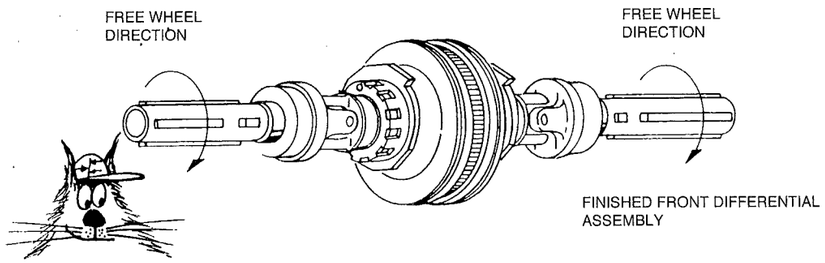

23

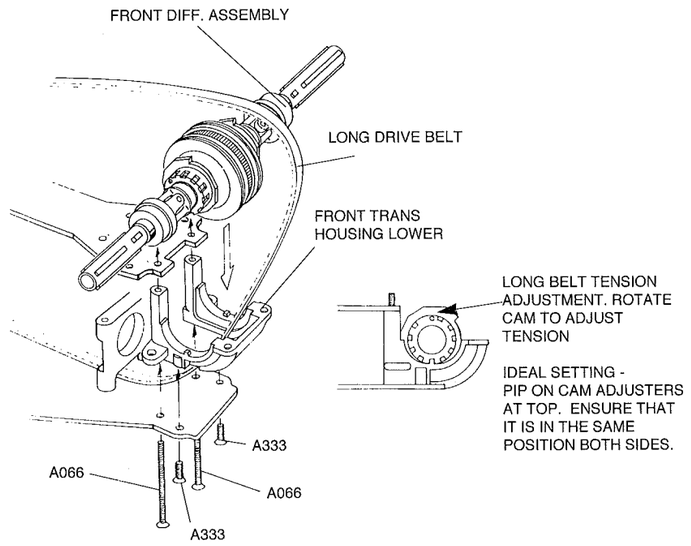

Schumacher BossCat

TRANSMISSION

HARDWARE


x 2 — *A533 BALLRACE*


x 2 — *A532 FLANGED BALLRACE*


x 1 — *A512 BALLRACE*

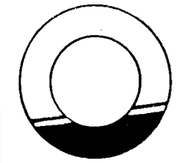
x 2 — *A544 DIFF. WASHER*

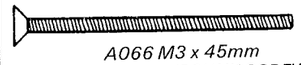
x 3 — *A066 M3 x 45mm COUNTERSUNK SCREW*

BOSSCAT SPORT ONLY

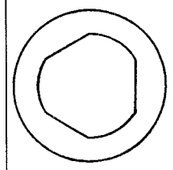
x 2 — *T1154 TRI-LOBED WASHER*

x 2 — *A539 BEARING SLEEVE*

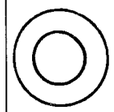
x 2 — *A536 OILITE BEARING*

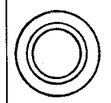
x 2 — *T1158 BUSH*


x 2 — *T1159 BUSH*

1

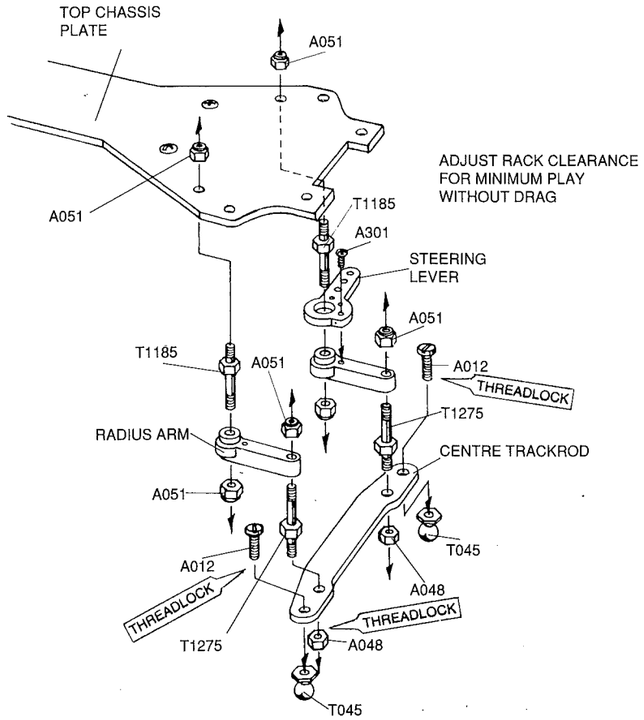

2

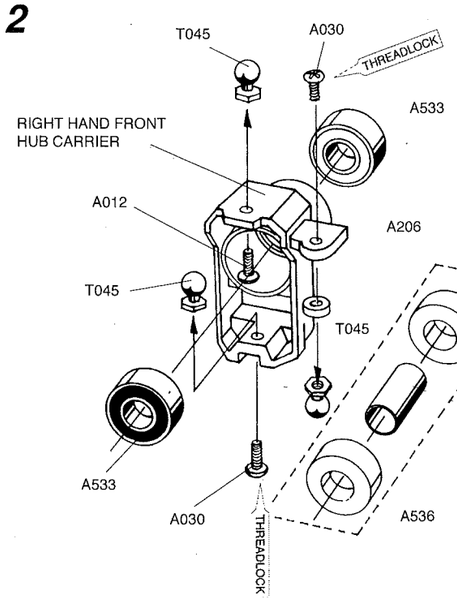

REPEAT ASSEMBLY FOR LEFT HAND FRONT HUB CARRIER

SPORT ONLY

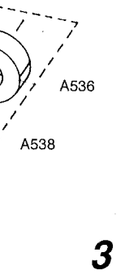

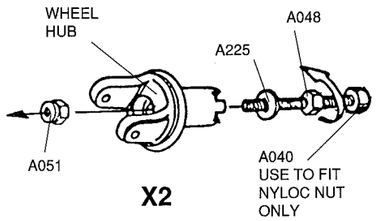

X2

3

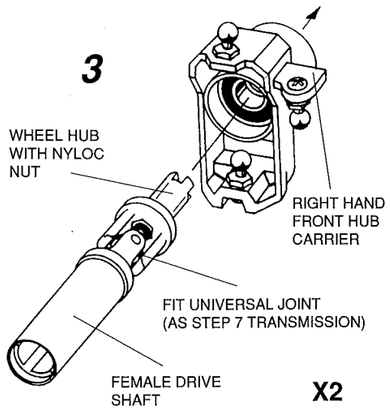

X2

Schumacher

BossCat

FRONT SUSPENSION

HARDWARE



A051 M3 NYLOC NUT

x 8



A048 M3 NUT

x 2

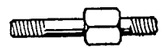

T1185 STEERING PIVOT

x 2



A225 STEEL WASHER

x 1

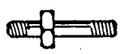

T1275 STEERING RACK PIVOT

x 2

A040 CAPHEAD SCREW

x 1



A012 M3 x 8mm PANHEAD SCREW

x 4



T045 PIVOT BALL

x 6



A030 M3 x 10mm PANHEAD SCREW

x 4



A533 BALLRACE

x 4



A206 1.6mm NYLON WASHER

x 2

BOSSCAT SPORT ONLY

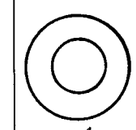

A536 OILITE BEARING

x 4



A538 SLEEVE

x 2

4

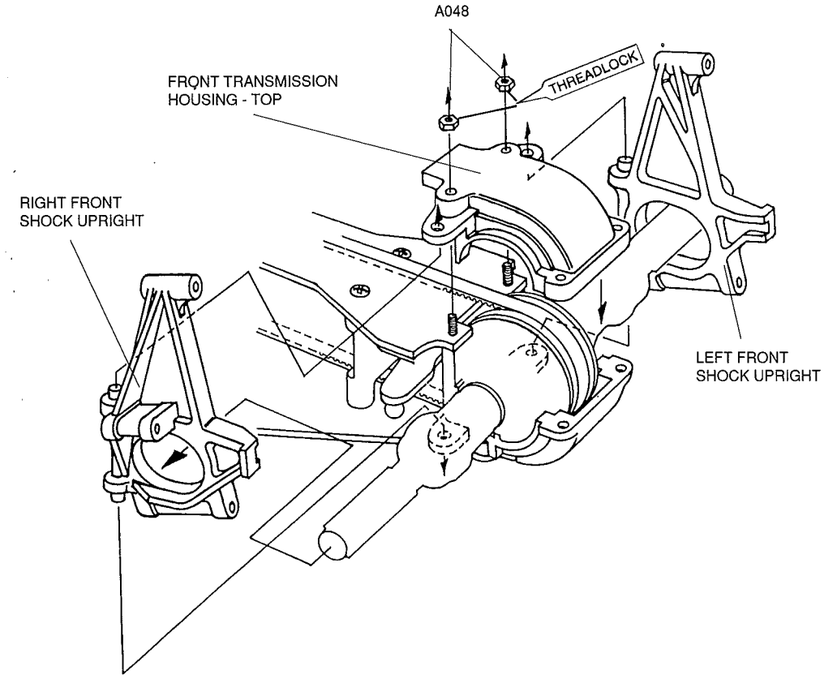

5

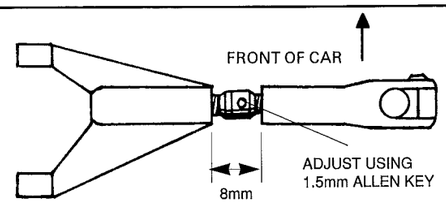

WHEN ADJUSTING UPPER WISHBONE TURNBUCKLE WHEN ON CAR, HOLD BALL SOCKET END TO PREVENT IT POPPING OFF HUB CARRIER.

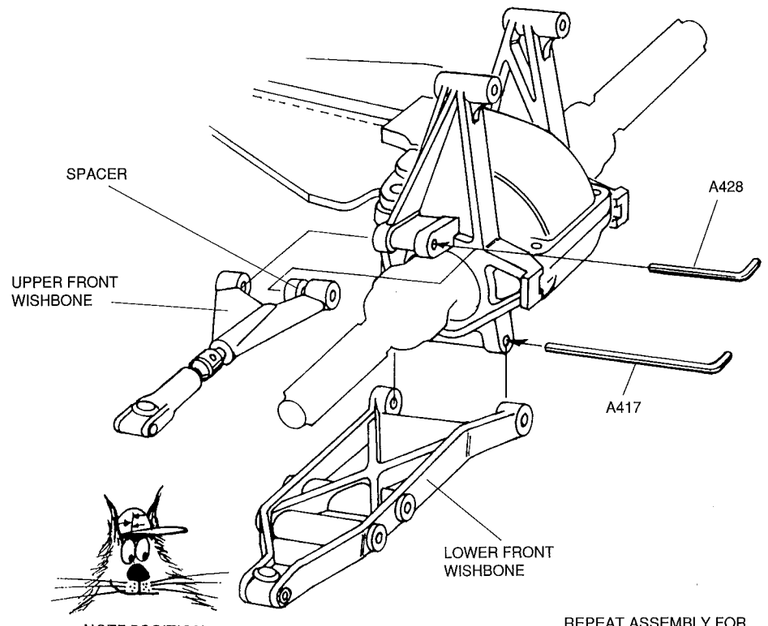

REPEAT ASSEMBLY FOR LEFT HAND SIDE

Schumacher

BossCat

FRONT SUSPENSION

HARDWARE



A048 M3 NUT

x 2



A428 BENT PIVOT PIN

x 2

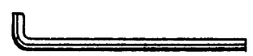

A417 BENT PIVOT PIN

x 2

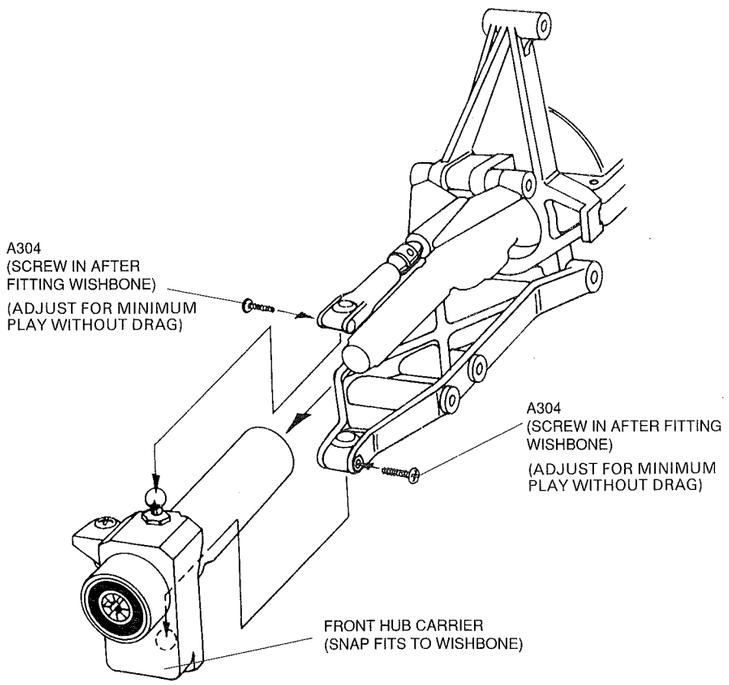

REPEAT ASSEMBLY FOR LEFT HAND SIDE

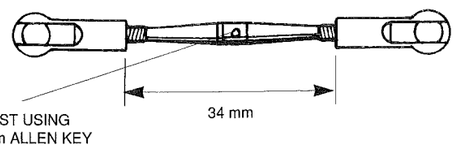

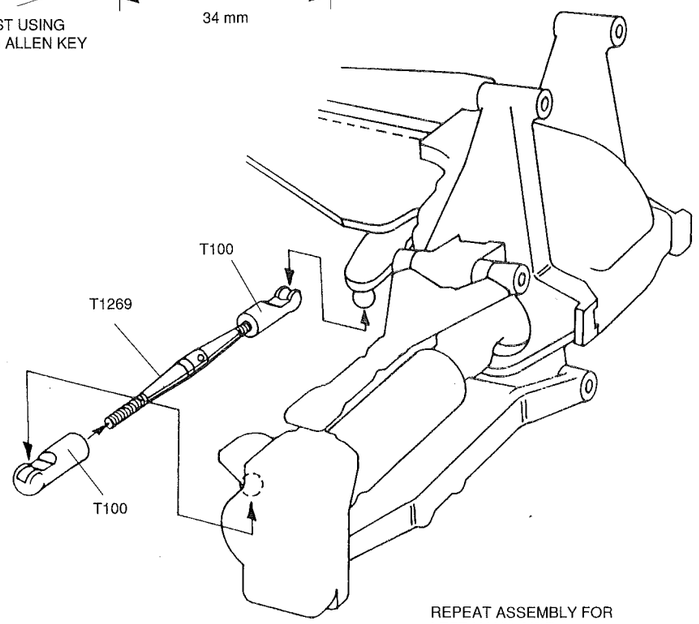

REPEAT ASSEMBLY FOR
LEFT HAND SIDE

Schumacher

BossCat

FRONT SUSPENSION

HARDWARE



x 4 — *A304 No.2 x 3/8 SELFTAP SCREW*



x 2 — *T1269 45mm TURNBUCKLE*

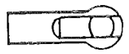

x 4 — *T100 BALL SOCKET*

Schumacher

COMPLETE TYRE RANGE

RACING TRUCK

Unique high traction tread patterns, VEE2 and VEE4, plus World famous Schumacher Minispike gives your racing truck the winning edge. To fit most 2.2" truck rims.

U6502W Truck Racing Tyre - VEE 2 BLUE
U6503X Truck Racing Tyre - VEE 4 BLUE
U6508C Truck 20x15 M.Spike - BLUE
U6520O Truck 20x15 M.Spike - GREEN
U6525T Truck 6x24 Rib - BLUE
U6526U Truck 6x24 Rib - GREEN

OFF ROAD "ORIGINALS"

These tyres set new standards around the World. The original CAT tyres available in Hard (Red) or Soft Compound. Often copied never bettered.

T650T CAT Rr.Tyres 4x20 Soft Spike
T651U CAT Rr.Tyres 4x20 Hard Spike
T652V CAT Fr.Tyres 3x20 Soft Spike
T653W CAT Fr.Tyres 3x20 Hard Spike

OFF ROAD "BLUES"

Natural rubber compound gives very high grip in slippery conditions and is strong enough to give massive bite when the traction is high. Blues are very hard wearing!
Minispikes - Use on hard slippery tracks.
Spikes - Use on soft dirt and grass.
Blocks - Use on hard dirt and tarmac.

T679W CAT Rr.Tyres 15x12 Minispike
T681Y CAT Fr.Tyres 11x12 Minispike
T683A CAT Rr.Tyres 15x15 Minispike
T685C CAT Rr.Tyres 11x15 Minispike
T687E CAT Rr.Tyres 4x20 Spike
T688F CAT Fr.Tyres 3x20 Spike
T689G CAT Fr.Tyres 2x20 Stud
T690H CAT Rr.Tyres 5x24 Minispike
T691I CAT Fr.Tyres 4x24 Minispike
T692J CAT Rr.Tyres 6x20 Block
T693K CAT Fr.Tyres 4x20 Block
T694L CAT Rr.Tyres 6x20 Cut Spike
T695M CAT Fr.Tyres 1x20 Rib Spike
T696N CAT Rr.Tyres 4x20 Cut Spike
T697O CAT Fr.Tyres 3x20 Cut Spike
T698P CAT Fr.Tyres - Rib
U6506A CAT Rr.Tyres - Combi
U6507B CAT Rr.Tyres 15x24 Minispike

OFF ROAD "GREENS"

Latest soft natural compound specially formulated to give improved grip and a smoother ride. Recommended for hard bumpy dirt circuits.

U6511F CAT Fr.Tyres 11x12 Minispike
U6512G CAT Rr.Tyres 15x12 Minispike
U6513H CAT Fr.Tyres 3x20 Spike
U6514I CAT Rr.Tyres 4x20 Spike
U6519N CAT Fr.Tyres 2x20 Stud

ROAD & TRACK

Super realistic low profile tread tyres and high grip "Sponges" for tarmac and asphalt. Try the RT2 on your Rallycross or Dirt Oval Car.

T670N CAT Fr. "Sponges" On Wheel
T6710 CAT Rr. "Sponges" Wide Wheel
U6500U Road & Track Tyre - RT1 Front
U6501V Road & Track Tyre - RT1 Rear
U6504Y Road & Track "Sponges" Front
U6505Z Road & Track "Sponges" Rear
U6509D Road & Track Tyre - RT2 Front
U6510E Road & Track Tyre - RT2 Rear

OFF ROAD 2.2" TYRES

Specially designed to complement the new 2.2" Aerodisc wheels are Schumacher's latest generation of rounded profile tyres to give even ground pressure and consistent contact patch with roll. Available in Blue and Green compound rubber.

U6515J CAT Fr.Tyres 8x20 MSpike GREEN
U6516K CAT RrTyre12x20 MSpike GREEN
U6517L CAT Fr.Tyres 8x20 M.Spike BLUE
U6518M CAT Rr.Tyres 12x20 MSpike BLUE
U6523R CAT Fr.Tyres 2x20 Stud BLUE
U6524S CAT Fr.Tyres 2x20 Stud GREEN
U6527V CAT Rr.Tyres 8x10 Spike BLUE
U6528W CAT Rr.Tyres 8x10 Spike GREEN
U6529X CAT Fr.Tyres 6x10 Spike BLUE
U6530Y CAT Fr.Tyres 6x10 Spike GREEN
U6531Z CAT Rear 8x10 Cut Spike BLUE
U6532A CAT Rear 8x10 Cut Spike GREEN
U6533B CAT Front 6x10 Cut Spike BLUE
U6534C CAT Front 6x10 Cut Spike GREEN
U6535D CAT Rear 22x34 Microspike BLUE
U6536E CAT Rr. 22x34 Microspike GREEN
U6537F CAT Front 14x34 Microspike BLUE
U6538G CAT Fr. 14x34 Microspike GREEN

Schumacher

BossCat

U731E SELFTAP SCREWS - SPARES PACK
U732F M3 FASTENINGS - SPARES PACK

SPARES DIAGRAM

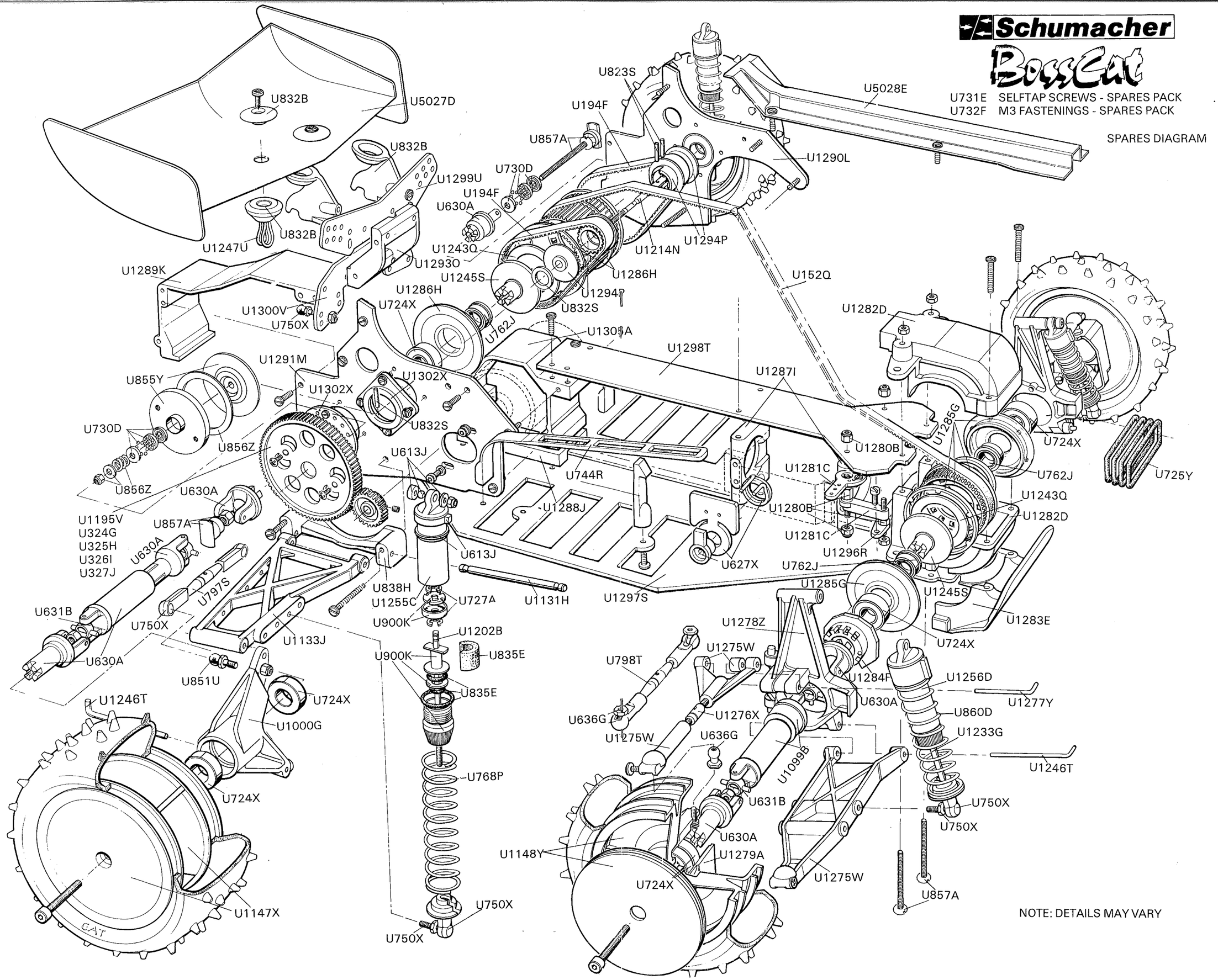

NOTE: DETAILS MAY VARY

Schumacher

BOSSCAT SPARES LIST

QUANTITY REQUIRED	SPARES NUMBER	DESCRIPTION
		KITS
	U440S	BOSSCAT - 4WD - Competition All Terrain
		BODY, CHASSIS etc.
	U119J	Aerial Tube
	U122M	Velcro 50x20mm (pk 4)
	U1247U	Wing Mount 'O' Ring (pk 8)
	U1283E	Front Bumper - BOSSCAT
	U1287I	'H' Brackets (pr)
	U1292N	Instruction Book - BOSSCAT
	U1296R	Carbon Fibre Track Rod - 4WD
	U1297S	Carbon Fibre Lower Chassis - BOSSCAT
	U1298T	Carbon Fibre Top Chassis - BOSSCAT
	U1299U	Carbon Fibre Rr. Shock V/Mnt - BOSSCAT
	U1300V	Carbon Fibre Rr. Susp. V/Mnt - BOSSCAT
	U1303Y	Decal Sheet - BOSSCAT
	U5027D	Bodyshell & Wing - BOSSCAT
	U5028E	Undertray & Belt Guards - BOSSCAT
	U731E	Self Tap Screws - Spares Pack
	U732F	M3 Fastenings - Spares Pack
	U744R	Q.C. Saddle Pack Strap (pk 2)
	U832B	Wing Mount Kit
		SUSPENSION PARTS
	U1000G	Rear Hub Carrier-Adj-2&4WD (pr)
	U1131H	Pivot Pin 1/8" - Rear Wishbone (pr)
	U1133J	Rear Wishbone-Med W/B-1/8" Pin (pr)
	U1202B	Piston Rod. Long - Vari Shock (pr)
	U1233G	Piston Rod. Med - Vari Shock (pr)
	U1246T	34mm Bent Pivot Pin (pr)
	U1255C	Vari Shock Body - Long (pk 1)
	U1256D	Vari Shock Body - Medium (pk 1)
	U1275W	Front Wishbone Set - BOSSCAT
	U1276X	M4 x 45mm Turnbuckle Adjuster (pr)
	U1277Y	28mm Bent Pivot Pin
	U1278Z	Front Susp. Uprights - BOSSCAT (pr)
	U1279A	Front Hub Carrier - BOSSCAT (pr)
	U1280B	Steering Pivot Set - BOSSCAT
	U1281C	Steering Levers - 4WD
	U1293O	'Z' Bracket, Rear Susp. - 4WD
	U5013P	Vari Shock Absorbers - Medium (pr)
	U5017T	Vari Shock Absorbers - Long (pr)
	U613J	Spring Stop & Spacer Moulding (pr)
	U627X	Servo Saver Assembly
	U636G	M3 Ball Joints Bag (pk 4)
	U717Q	Adjustable Servo Link (2 sets)
	U725Y	Tension Ring - Crashback (pk 8)
	U727A	'E' Clip 1/8" (pk 10)
	U728B	Rose Joints M3 - SHORT (pk 4)
	U750X	Ball Studs & Sockets (8 prs)
	U768P	Rear Spring Tuning Set (4 prs)
	U796R	Turnbuckle Adjuster - 24mm (pk 2)
	U797S	Turnbuckle Adjuster - 35mm (pk 2)
	U798T	Turnbuckle Adjuster - 45mm (pk 2)
	U835E	Vari Shock Seal Pack (pr)
	U838H	Rear Susp. Brackets 1/8" Pin 4WD
	U851U	Long Ball Studs & Sockets (8 prs)
	U860D	Medium Spring Tuning Set (4 prs)
	U900K	Vari Shock - Mouldings (pr)
		TRANSMISSION PARTS
	U1028I	Ball Bearing 1/4 x 3/8" NF
	U1098A	One Way Drive Shaft - LEFT
	U1099B	One Way Drive Shaft - RIGHT
	U1147X	Aerodisc Rear Wheel 2.2" (pr)

QUANTITY REQUIRED	SPARES NUMBER	
		TRANSMISSION contd..
	U1148Y	Aerodisc Front Wheel 2.2" (pr)
	U1195V	98T Q.C. Slipper Gear - 48 D.P.
	U1214N	Layshaft - Q.C. Slipper
	U1243Q	23mm Pro-Diff Washers (pk 2)
	U1245S	23mm Pro-Diff Washer Carrier (pr)
	U1282D	Front Diff Housings - BOSSCAT
	U1284F	Front Belt Cam Adj's - BOSSCAT
	U1285G	23mm Diff Pulley - 10mm narrow
	U1286H	23mm Diff Pulley - 22mm wide
	U1288J	Rear Trans Spacer - BOSSCAT
	U1289K	Outer Trans Housing - BOSSCAT
	U1290L	Cover Plate, RED - BOSSCAT
	U1291M	Motor Plate, RED - BOSSCAT
	U1294P	21T Top Pulleys - 4WD
	U1301W	Silicone Diff Grease - Tube
	U1302X	Bearing Hsgs. Eccentric&L/Shaft
	U152Q	Long Drive Belt 4mm MXL
	U194F	Hi Torque Drive Belt - 5mm
	U226I	Bush - Layshaft Bearing (4x8mm) (pk 2)
	U233P	19T PINION - 48 D.P.
	U234Q	22T PINION - 48 D.P.
	U235R	25T PINION - 48 D.P.
	U236S	28T PINION - 48 D.P.
	U324G	95T Q.C. Slipper Gear - 48 D.P.
	U325H	92T Q.C. Slipper Gear - 48 D.P.
	U326I	89T Q.C. Slipper Gear - 48 D.P.
	U327J	86T Q.C. Slipper Gear - 48 D.P.
	U631B	Universal Joints Bag - (4 pcs)
	U724X	Ball Races 8x16x5 (pk 4)
	U730D	Thrust Race 1/8" x 5/16"
	U762J	Ball Race 8x12mm FL. (pk 2)
	U780B	Ball Bearing 8x16x5 (pk 8)
	U816L	Tungsten Carbide Diff Balls 3mm (pk 14)
	U823S	Q.C. Slipper Clutch+Gears 2&4WD
	U857A	Screw, Locknut, Cover - 23mm Diff
	U858B	23mm Pro Diff - 2&4WD - Complete
		SPEED SECRETS 'CHASSIS'
	U1261I	Pozi Screw Driver No 1
	U1304Z	Truck & Saloon Body Mounts - Bosscat
	U5021X	Bodyshell - STORM Racing Truck
	U585O	Bodyshell - RS Cosworth 4X4
		SPEED SECRETS 'SUSPENSION'
	U1134K	Rear Wishbone LongW/B-1/8" Pin (pr)
	U1128E	Rear W'Bone Med/LngW/B-1/8"Pin(pr)
	U1135L	Rear Wishbone ShortW/B-1/8" Pin (pr)
	U765M	Front Anti Roll Bar Kit - 4WD
	U766N	Rear Anti Roll Bar Kit - 4WD
		SPEED SECRETS 'TRANSMISSION'
	U1249W	Alloy Eccentrics - 23mm Diff (pr)
	U224G	Front Wheel - Spoked White 2.15"
	U225H	Rear Wheel - Spoked White 2.15"
	U737K	L/Wt S.S. Ballraces (=A533) (pr)
	U817M	Roller Drive Shaft (one piece)
	U819O	Service Kit - Roller Drive Shaft
	U843M	Ceramic Diff Balls - dia 3mm (pk 14)
	U854X	Ballraced Drive Shaft - one piece
	U855Y	Thrust Plate & Drive Hub - Slipper
	U856Z	Repair Kit - Q.C. Slipper

1

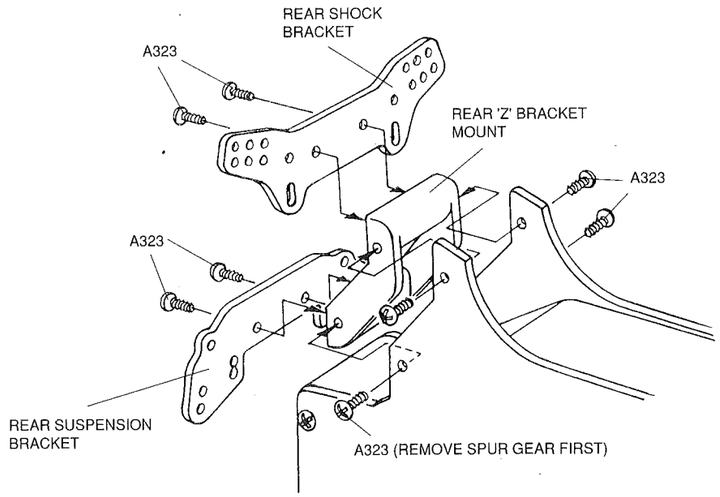

2

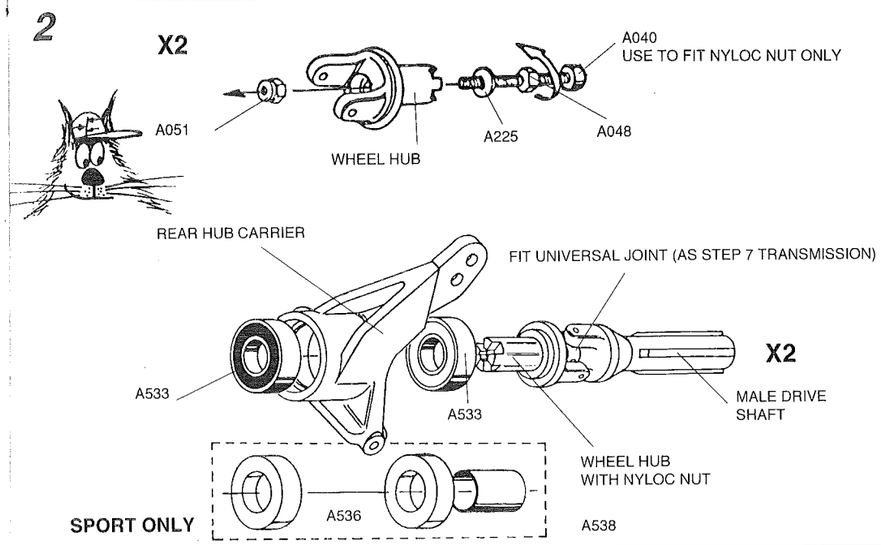

3

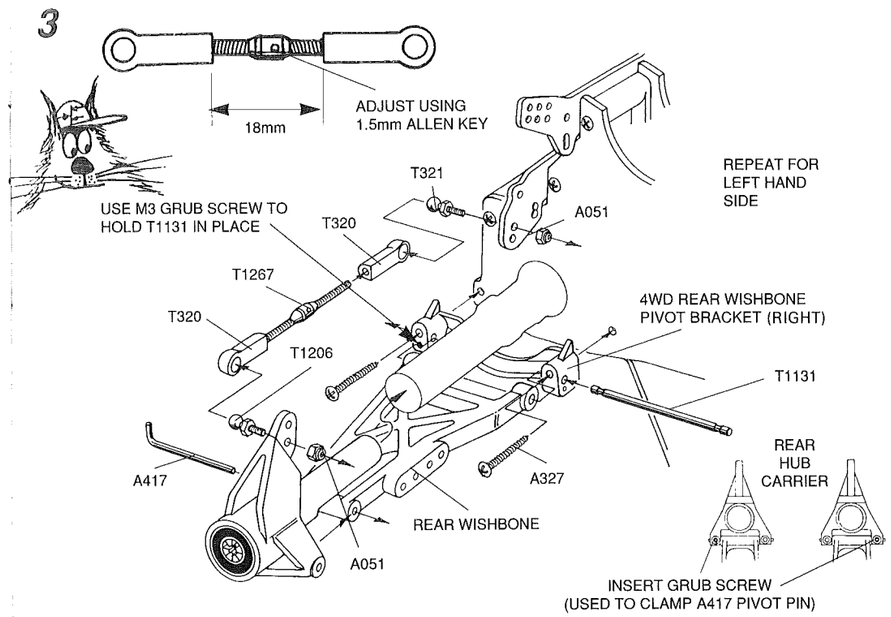

Schumacher

BossCat

REAR SUSPENSION

HARDWARE

x 8 — A323 No.4 x 3/8" SELFTAP SCREW

x 6 — A051 M3 NYLOC NUT

x 1 — A225 STEEL WASHER

x 1 — A048 M3 NUT

x 1 — A040 M3 x 20 CAPHEAD

x 4 — A533 BALLRACE

x 2 — T108 UNIVERSAL JOINT

x 2 — T1267 35mm TURNBUCKLE

x 4 — A327 No.4 x 1" SELFTAP SCREW

x 4 — T320 BALL JOINT SOCKET

x 2 — T321 BALLSTUD

x 2 — T1206 BALLSTUD LONG

x 2 — T1131 1/8" REAR WISHBONE PIVOT PIN

x 2 — A417 BENT PIVOT PIN

BOSSCAT SPORT ONLY

x 4 — A536 OILITE BEARING

x 2 — A538 SLEEVE

Schumacher BossCat

SHOCK ABSORBERS

1

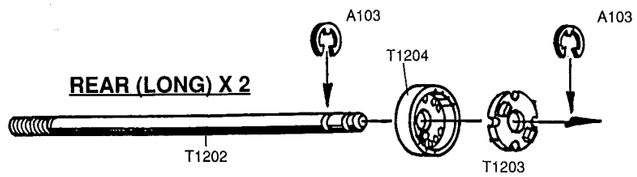

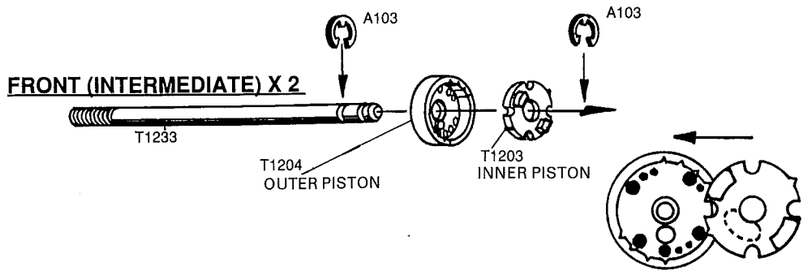

MAKE SURE PISTONS CORRECTLY LOCATED

2

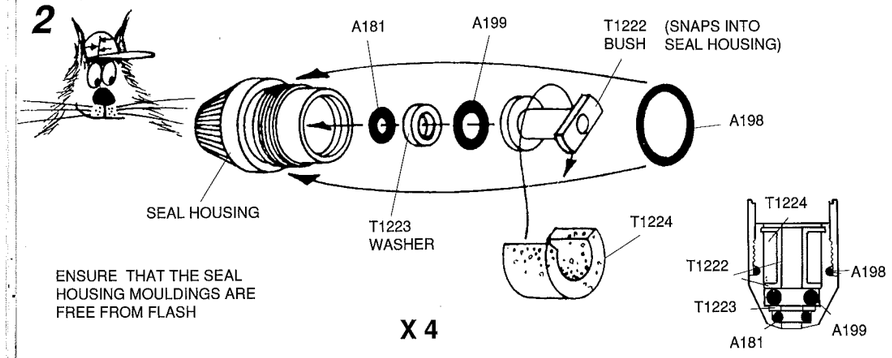

ENSURE THAT THE SEAL HOUSING MOULDINGS ARE FREE FROM FLASH

X 4

3

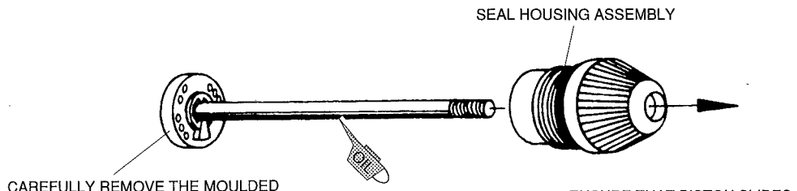

CAREFULLY REMOVE THE MOULDED PIP CHECK FOR FREE PISTION MOVEMENT INSIDE SHOCK BODY

X 4

ENSURE THAT PISTON SLIDES FREELY IN THE SEAL HOUSING ASSEMBLY

4

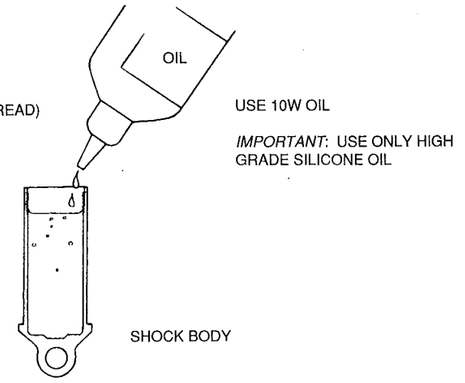

HARDWARE

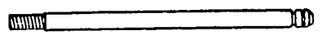

x 2 *T1202 SHOCK ROD LONG*

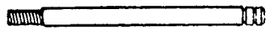

x 2 *T1233 SHOCK ROD INTERMEDIATE*



x 4 *A103 'E' CLIP*



x 4 *A181 'O' RING*



x 4 *A199 'O' RING*



x 4 *A198 'O' RING*



x 4 *T1224 FOAM VOLUME COMPENSATOR*



x 4 *T1223 SHOCK WASHER*

5

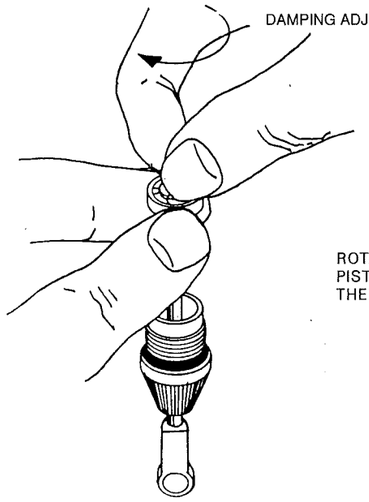

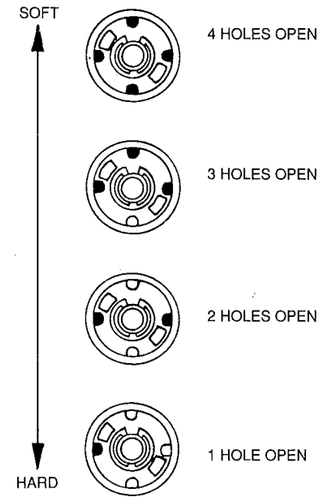

(STARTING POINT 2 HOLES OPEN)
(SEE TRACK SETTINGS DAMPING STEP 7)

6

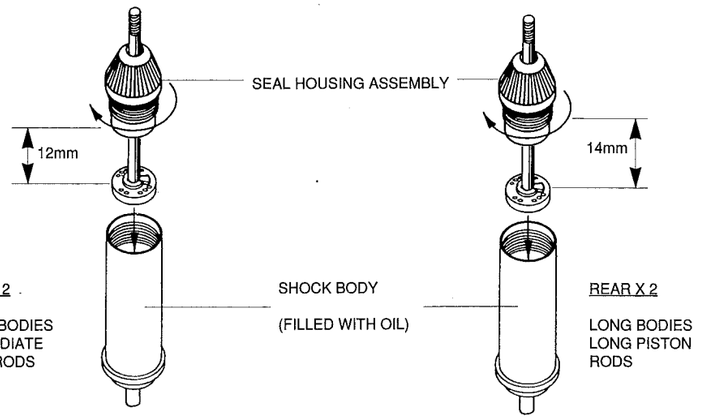

7

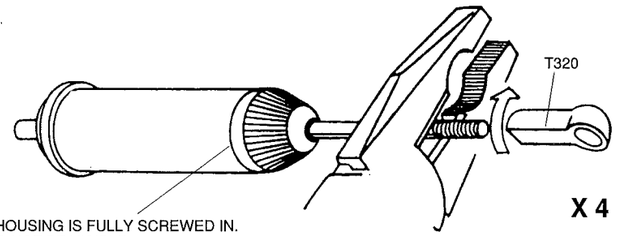

ENSURE SEAL HOUSING IS FULLY SCREWED IN. 'O'RING SHOULD NOT BE VISIBLE

X 4

8

X 4

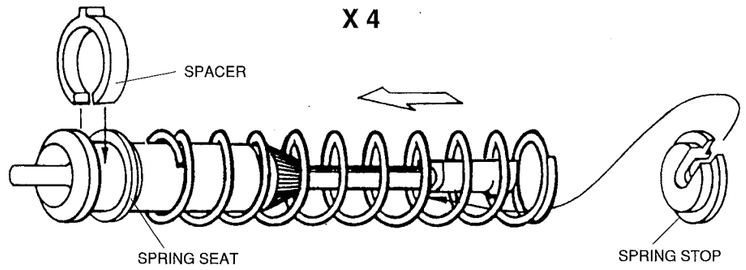

HARDWARE

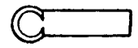

x 4 *T320 BALL JOINT SOCKET*

9

FITTING FRONT SHOCK ABSORBERS

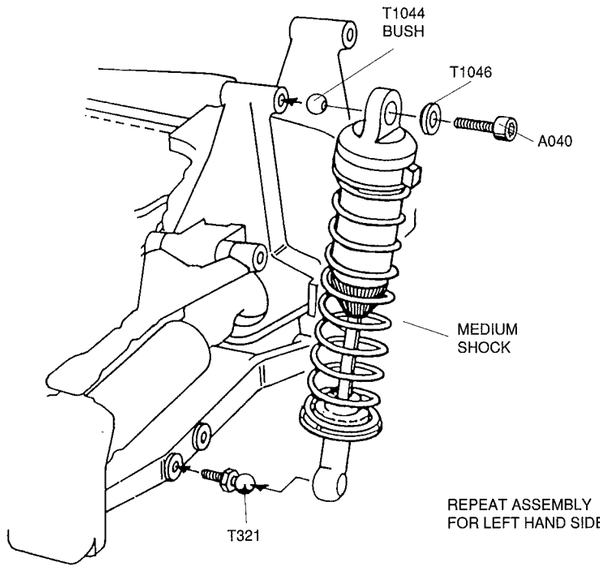

REPEAT ASSEMBLY
FOR LEFT HAND SIDE

10

FITTING REAR SHOCK ABSORBERS

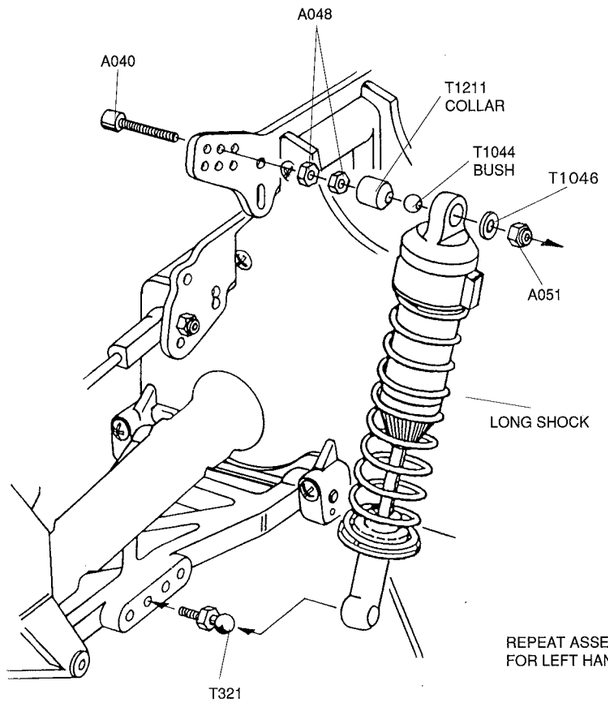

REPEAT ASSEMBLY
FOR LEFT HAND SIDE

Schumacher
BossCat

SHOCK ABSORBERS

HARDWARE

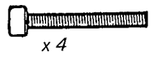

x 4 — *A040 M3 x 20mm CAPHEAD SCREW*



x 4 — *A048 M3 NUT*



x 2 — *A051 M3 NYLOC NUT*



x 4 — *T321 BALL STUD SHORT*

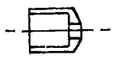

T1211 COLLAR

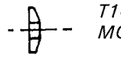

T1046 SHOCK MOUNT WASHER

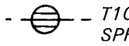

T1044 SPHERICAL BUSH

PARTS LOCATED ON SHOCK SPACER MOULDING

1

FIT TYRES TO WHEELS. MAKE SURE TYRE BEAD SEATS PROPERLY IN GROOVES OF THE WHEEL.

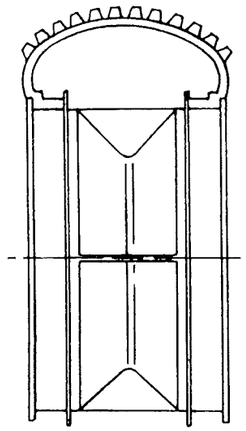

REAR

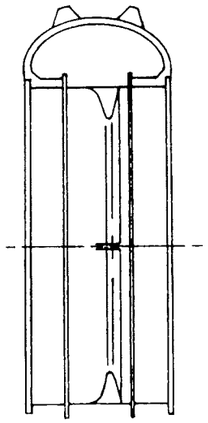

FRONT

2

FRONT X2

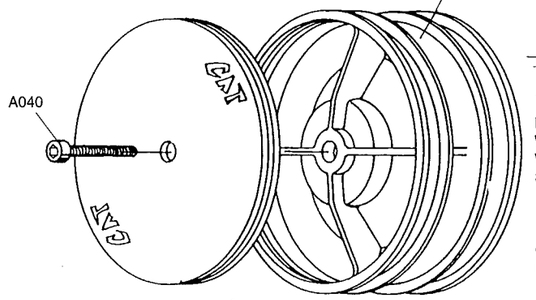



ENSURE WHEEL ENGAGES WITH DOGS IN INNER HUB WHEN TIGHTENING SCREW.

REMOVE MOULDED PIP ON DISCS BEFORE PUSHING INTO WHEEL.

REAR X2

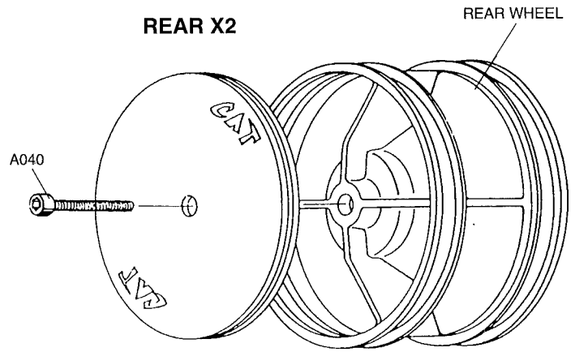

WHEELS CAN BE DYED ANY COLOUR AVAILABLE

Schumacher
BossCat

WHEELS & TYRES

HARDWARE



x 4 — *A040 M3 x 20mm CAPHEAD SCREW*

1 FITTING NICADS

THE CHASSIS GIVES YOU THE OPTION OF TWO DIFFERENT NICAD LOCATIONS, WHICHEVER OPTION IS USED, A BLIP AROUND THE UNUSED HOLE WILL NEED TO BE FILED OFF.

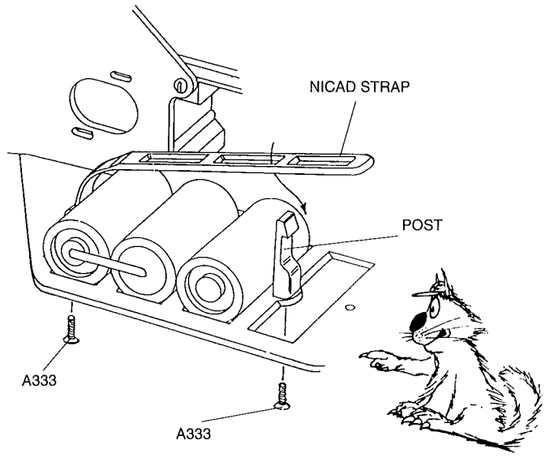

2 FITTING SERVO INTO CAR

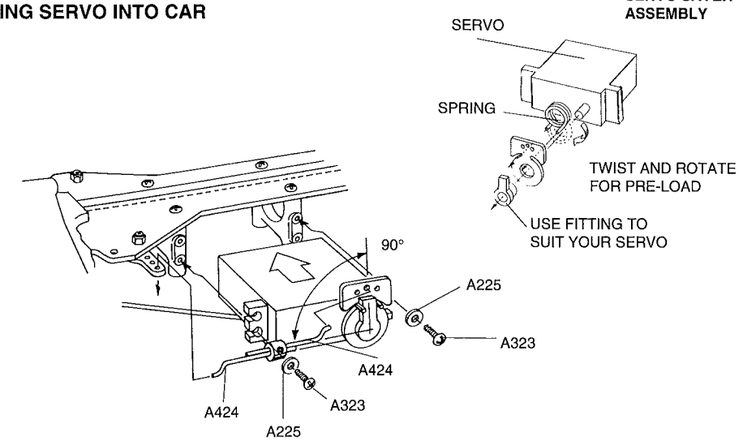

3 FITTING MOTOR

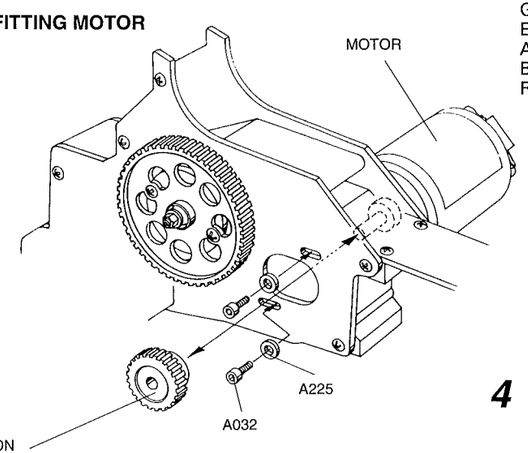

GEAR - PINION MESH: ENSURE THERE IS A SMALL AMOUNT OF PLAY BETWEEN GEARS TO REDUCE DRAG.

CONSULT THE INDIVIDUAL INSTRUCTION SHEETS SUPPLIED WITH YOUR OWN RADIO CONTROL EQUIPMENT AND SPEED CONTROLLER WHEN FITTING INTO CAR.

FITTING AERIAL

4

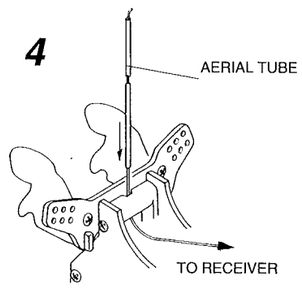

Schumacher BossCat

FITTING ELECTRICS

HARDWARE

x 4	A333 No.4 x 3/8" COUNTERSUNK SELFTAP SCREW
x 2	A323 No.4 x 3/8" SELFTAP PANHEAD SCREW
x 4	A225 STEEL WASHER
x 2	A424 LINK WIRE
x 1	T252 WIRE CLAMP
x 2	A032 M3 x 6mm CAPHEAD SCREW

1

CUT AWAY SHADED AREAS.
USE A FILE OR ABRASIVE PAPER TO SMOOTH THE CUT EDGES. ANY RAGGED OR SCORE LINES MAY CAUSE THE BODYSHELL TO CRACK OR SPLIT WHEN IN USE.
PAINTING: FIRST WASH THE BODYSHELL TO REMOVE ANY OIL OR DIRT. RINSE THOROUGHLY. COVER MOUNTING HOLES WITH TAPE ON OUTSIDE OF BODYSHELL TO PREVENT PAINT GETTING ONTO THE OUTSIDE.
PAINT THE INSIDE OF THE BODYSHELL AND WING.
YOU CAN OBTAIN A COLOUR SCHEME BY MASKING A SECTION WITH TAPE, PAINTING THEN REMOVING THE TAPE AND PAINTING A DIFFERENT COLOUR. APPLY DARKEST COLOUR FIRST.
USE DECALS SUPPLIED TO FINISH YOUR BODYSHELL.

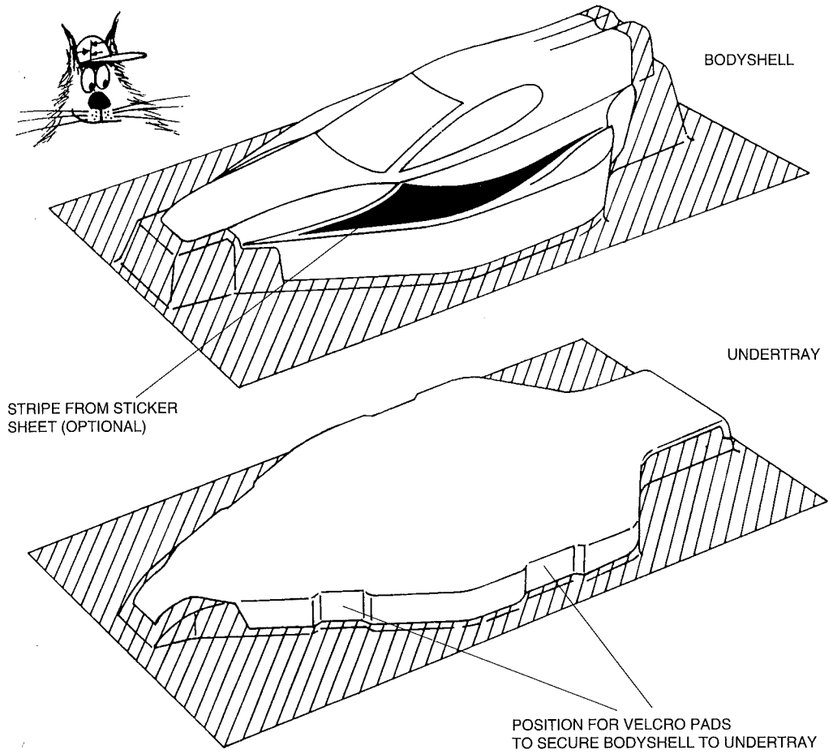

WARNING : CLEANING SOLVENTS WILL ATTACK THE POLYCARBONATE BODYSHELL AND UNDERTRAY CAUSING PERMANENT DAMAGE

2

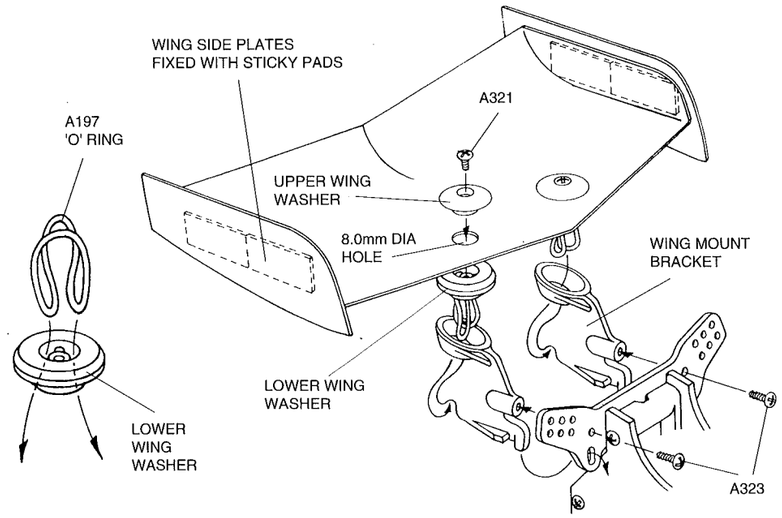

Schumacher BossCat

BODYSHELL

HARDWARE

x 2	A197 WING MOUNT 'O' RING
x 2	A321 No.4 x 1/4" SELFTAP PANHEAD SCREW
x 2	A323 No.4 x 3/8" SELFTAP PANHEAD SCREW

3 FITTING BELT GUARDS

CUT OUT UPPER & LOWER BELT GUARDS FROM POLYCARBONATE MOULDINGS

IN DUSTY RACE CONDITIONS YOU CAN USE DRAUGHT EXCLUDER (AVAILABLE FROM DIY STORES) BETWEEN THE MOULDINGS AND THE CHASSIS TO GIVE A BETTER SEAL.

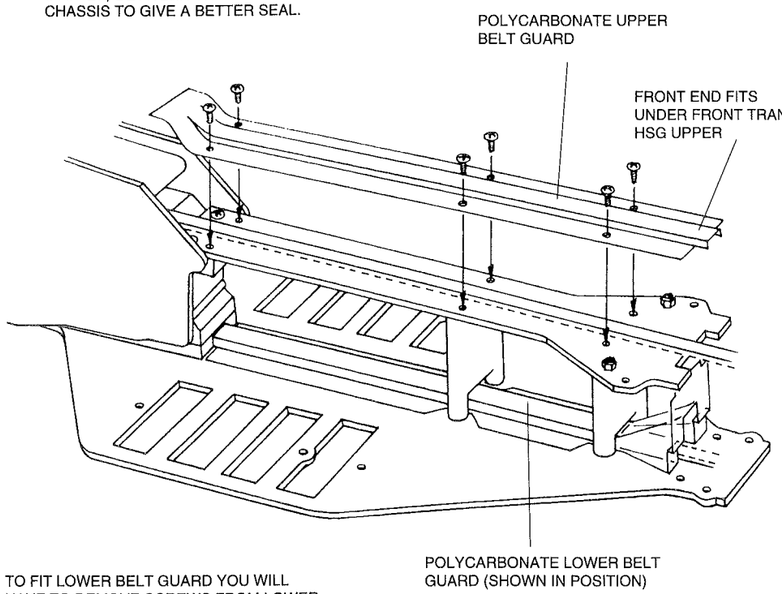

TO FIT LOWER BELT GUARD YOU WILL HAVE TO REMOVE SCREWS FROM LOWER CHASSIS FIRST.

4 FITTING UNDERTRAY & BUMPER

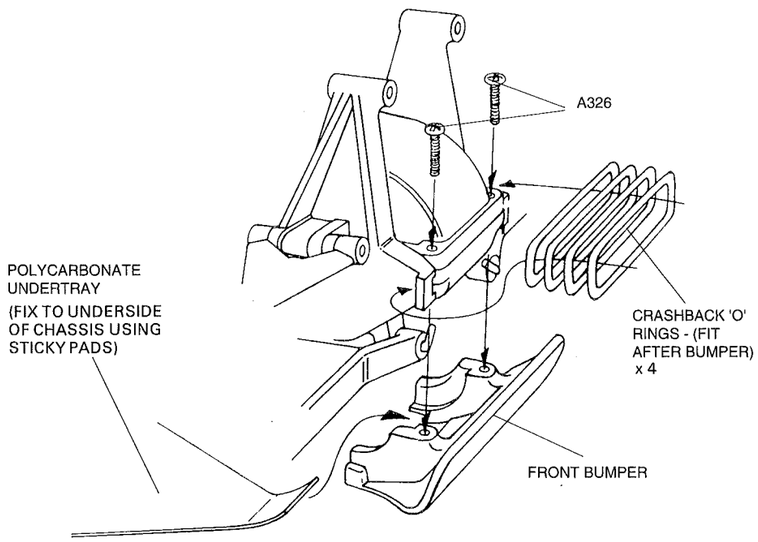

WARNING: CLEANING SOLVENTS WILL ATTACK THE POLYCARBONATE MOULDINGS CAUSING PERMANENT DAMAGE.

Schumacher BossCat

BODYSHELL

HARDWARE



x 2 *A326 No.4 x SELFTAP PANHEAD SCREW*

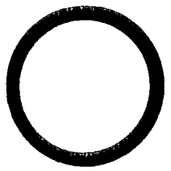

x 4 *CRASHBACK 'O' RING*



Schumacher BossCat

TRACK SETTINGS

1 Make sure all screws are tight. Re-check after every race.

2 DIFFERENTIAL ADJUSTMENT
In the unlikely event of the differentials needing adjustment between major re-builds, remove universal joint at dust cap end. Remove dust cap, insert screwdriver and rotate opposite rear wheel, clockwise to tighten, anticlockwise to loosen. (45° at a time). The differential should not slip under normal use. The correct tension is sufficient to give enough drive for the prevailing track conditions without slip and without excessive tension. When you first run the car punch the throttle momentarily to find if there is slip, this sounds just like belt slip. If you have correctly adjusted the belt tension (Transmission Assembly) then tighten differential until slip is eliminated.

3 BELT ADJUSTMENT
If correctly assembled and adjusted as shown in Transmission Assembly it is most unlikely that track - side adjustment will be required.
Never run with a slipping belt as both pulleys and belt can be damaged. Belt slip sounds like a tearing noise when the throttle is opened wide. Always re-check differential adjustment first as above because differential slip and belt slip sound very similar. To adjust, remove transmission assembly from the car by first removing the motor guard and then the 4 counter sunk screws from underneath and finally the two screws which pass through the bulkhead. Belt tension is then adjusted as in Transmission Assembly.

4 REAR-CAMBER
The rear wheels should be set at negative camber. This means that the tops of the wheels lean inwards. Adjustment is carried out by turning the top link. The left hand thread of the link is nearest the small groove. Turning this end clockwise will increase camber. Run the camber link to the upper hole of the rear hub carrier if you need more steering.

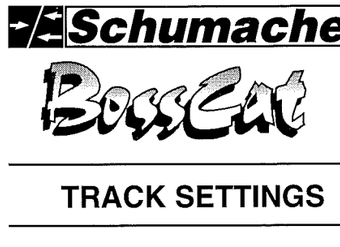

5 FRONT-CAMBER
The front wheels should be set at negative camber (adjust to be the same both sides.) Generally the more negative camber, the more steering you will get at high and medium speeds. Too much negative camber and you will begin to have less steering.

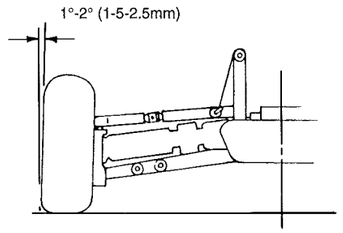

6 TOE IN
The front track rods are adjustable, similar to the top links at the rear. Set the front wheels up to be parallel to each other when pointing straight ahead. If conditions are slippery add 1-2 deg toe-in this will make the car steer a little less. Toe-out will give more steering at low speed, but may make the car more unstable on corner exit.

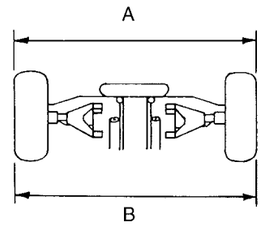

A greater than B = toe out.
A less than B = toe in.
A equal to B = parallel (standard setting)

7 RIDE HEIGHT AND SUSPENSION

The ride height of the car can be adjusted by changing the spring spacers fitted on the shock absorbers. Run the lowest ride height that track conditions allow. Suspension drop is the maximum downward movement of the wheel.

8 SUSPENSION TUNING

When setting up your car for handling the choice of damping, spring rate and of mounting holes for the shock absorbers are all very important. These factors combine to give you "Stiffness" and "Damping" which you must consider when working on the suspension settings of your car.
The "Stiffness" tables show what is achieved with various combinations of spring rate and wish bone holes.
"Damping" tables show what is achieved with various combinations of piston holes and wishbone holes.
The top shock mounting position should be chosen primarily to give the required ride height and is not very significant as far as "Stiffness" and "Damping" are concerned. However, as the shock absorber angle becomes more extreme the effective "Stiffness" and "Damping" are reduced slightly

STIFFNESS	SPRING	WISHBONE HOLE NO
6 HARD	M6	2
4.1	F6	1
4.0	M4	2
3.0	M3	2
2.7	F4	1
2.1	F3	1
2.0	M2	2
1.4	F2	1

DAMPING	PISTON HOLES	WISHBONE HOLE NO
40 STIFF	1	2
24.5	1	1
20	2	2
13.3	3	2
12.2	2	1
10.0	4	2
8.15	3	1
6.1	4	1

FRONT

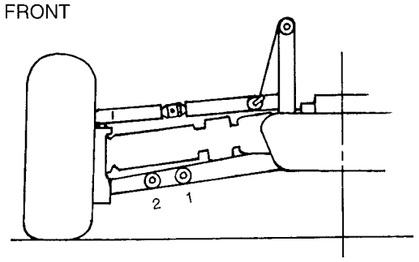

Springs in Kit are:		Free Length	No. of Coils
	M3	54mm	8
	M4	48mm	10
	M6	44mm	9

STIFFNESS	SPRING	WISHBONE HOLE NO
4 HARD	R4	4
3 2	R4	3
3	R3	4
2.44	R4	2
2.4	R3	3
2	R2	4
1.83	R3	2
1.76	R4	1
1.6	R2	3
1.5	R1.5	4
1.32	R3	1
1.22	R2	2
1.2	R1.5	3
1	R1	4
0.92	R1.5	2
0.88	R2	1
0.8	R1	3
0.66	R1.5	1
0.61	R1	2
0.44 SOFT	R1	1

DAMPING	PISTON HOLES	WISHBONE HOLE NO
40 STIFF	1	4
32	1	3
24.4	1	2
20	2	4
17.6	1	1
16	2	3
13	3	4
12.2	2	2
10	4	4
8.8	2	1
8	4	3
6.1	4	2
5.9	3	1
4.4 SOFT	4	1

REAR

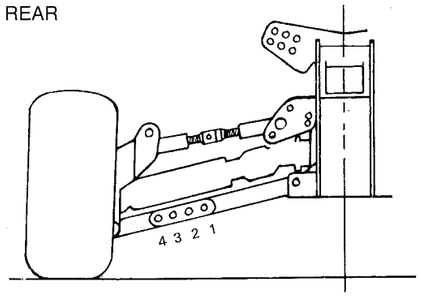

Springs in Kit are:		Free Length	No. of Coils
	R1.5	77mm	12
	R2	68mm	12
	R4	62m	11

Use the tables everytime you change the suspension settings and record the settings and results for future use. Different wishbone geometry at the front and rear mean that the front and rear tables cannot be related to each other. Experiment to find the settings that suit your driving style and the prevailing track conditions.

A note on spring rates: All Schumacher springs are designated F (front), M (medium) or R (rear) and a number which denotes the spring rate as referred to in the charts.

Schumacher BossCat
TRACK SETTINGS

9 CASTER ANGLE

The caster angle on the BOSSCAT front suspension can be changed. There are several different settings giving a range of caster angles between 9° and 21°.
The front wishbones are offset. Swapping left and right wishbones will change the caster angle. Moving the front wishbone spacer to the back or front will also alter the caster angle.
More caster will give more steering under most conditions, experiment to find which suits you best.
Always recheck toe in (6) and front camber (5) after making caster adjustments.

10 TYRES

The front and rear tyres in the kit will give safe predictable handling for normal conditions. However, Schumacher CAT ranges of tyres offer a wide range of options to cover all extremes of operating conditions. The

11 GEAR RATIOS FOR 5 MINUTE RACE DURATION

Pinion	Gear	Pinion to gear ratio	Overall Ratio	Approx. Motor Wind	
19	95	5.000	12.14	11T	
19	92	4.842	11.76		
19	89	4.684	11.38	12T	
19	86	4.526	10.99	13T	HOT MOTOR
22	95	4.318	10.49		
22	92	4.182	10.16	14T	
22	89	4.045	9.62		
22	86	3.909	9.49		
25	95	3.800	9.23	15T	
25	92	3.68	8.94		
25	89	3.56	8.65	16T	
25	86	3.44	8.35		MILD MOTOR
28	95	3.393	8.24	17T	
28	92	3.286	7.98		
28	89	3.179	7.72		
28	86	3.071	7.46	19T	

12 LUBRICATION

All bearings must be lubricated, especially during wet weather. Always remove bearings and clean after running in wet conditions. A533 ballraces may be cleaned by carefully removing the seals with a knife blade under the outside edge and pressed back into place after cleaning. Black contact seals may be removed to reduce drag in clean conditions. WARNING: Some aerosol oils and degreasers will expand bearing seals causing drag. Plastic parts should not be lubricated. Drive belts MUST NO be lubricated. Ball differentials and thrust races should only be lubricated with silicone grease.

13 GENERAL

In general the car should understeer this means the front wheels slide more than the rear wheels during cornering. You can get this by cutting the spikes of the front tyres down. It helps to have two or three sets of front tyres with different levels of spikes to test for the best option.
Run the lowest ride height that track conditions will allow - a low car always corners better than a high car. Use the softest damper settings that stops the wheels from bouncing. It is very easy to over damp the car and cause bouncing at speed.

THUNDEROUS POWER!

The Nitro10 High Performance .15cu, 2.5cc, 28,000 rpm Motor

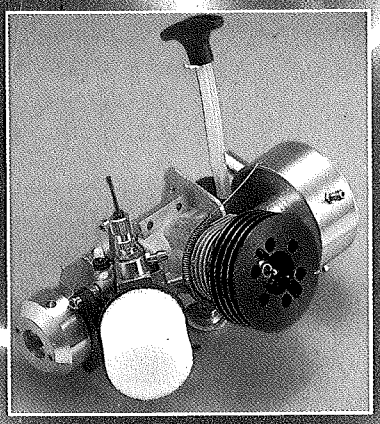

NITRO 10 RACING TRUCK

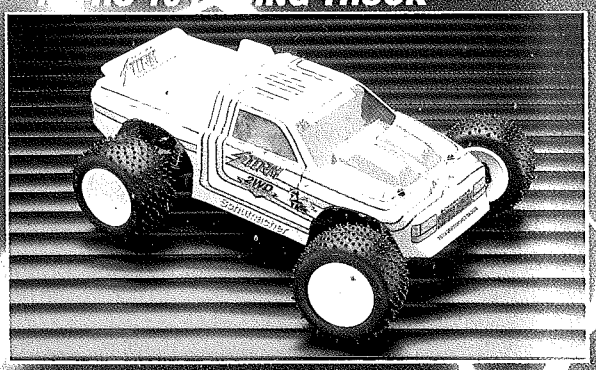

911 SPORT

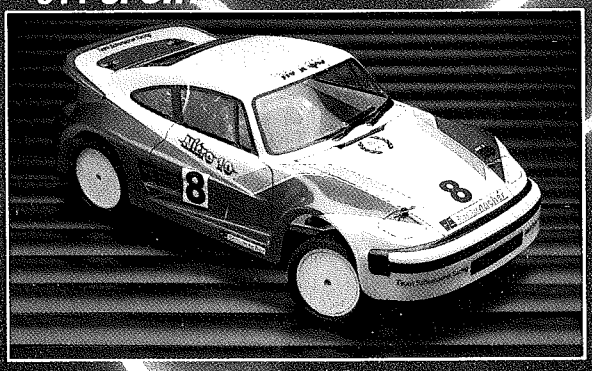

190 EVOLUTION

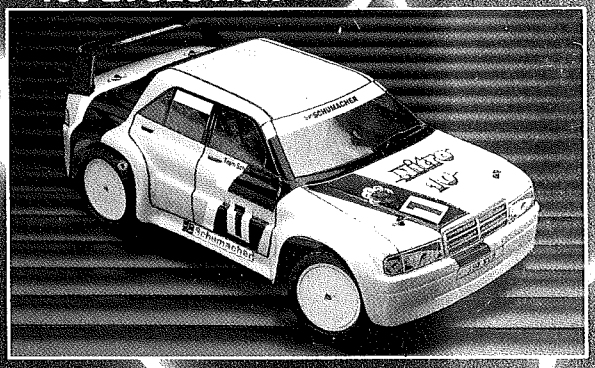

PANTHER

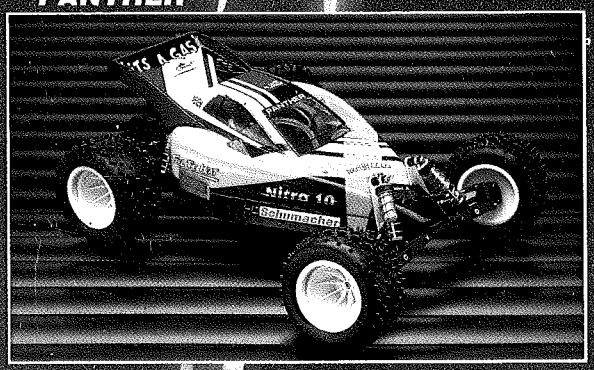

M3

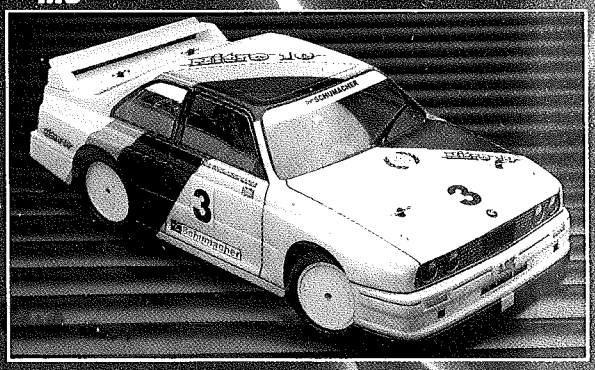

NITRO 10 CHASSIS

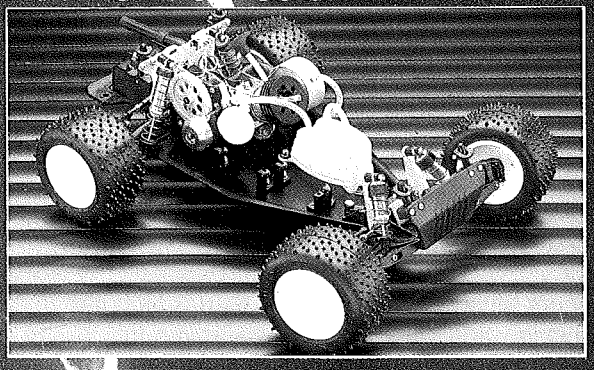

The Nitro10 range from the Schumacher Power House

Schumacher

Nitro 10 POWER HOUSE

Schumacher