CAT 2000 Classic
THE NEXT GENERATION

Schumacher

Driver: | Date: | Event/Track:

Qualify: | Final: | Best Lap:

TRACK TYPE

Grip Level	High ☐ Medium ☐ Low ☐
Type	Tight ☐ Open ☐ Mixed ☐
Condition	Flat ☐ Bumpy ☐ Mixed ☐
Surface	Clay ☐ Long Astro ☐ Carpet ☐ Grass ☐ Short Astro ☐ Mixed ☐
Weather	

TYRES

	FRONT	REAR
Tyres		
Wheels		
Inserts		

Notes:

Notes:

FRONT SUSPENSION

KEY: **P** = Plastic, **A** = Alloy, **CF** = Carbon Fibre, **S2** = Schumacher Composite, **Sh** = Short, **H** = High, **L** = Low, **F** = Front, **R** = Rear, **Y** = Yes, **N** = No

Ride Height	mm
Toe	deg In ☐ Out ☐
Camber at Ride Height	deg
Rake (C/F)	10° ☐ 15° ☐ 20° ☐
Castor	+5 ☐ 0 ☐ -5 ☐
Bump Steer Washers	mm
Servo Saver Lockout	Y ☐



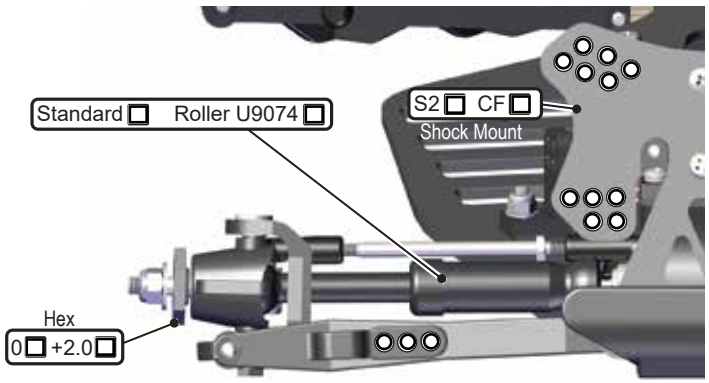

REAR SUSPENSION

KEY: **P** = Plastic, **A** = Alloy, **CF** = Carbon Fibre, **S2** = Schumacher Composite, **Sh** = Short, **H** = High, **L** = Low, **F** = Front, **R** = Rear, **Y** = Yes, **N** = No

Ride Height	mm
Camber at Ride Height	deg
ARB	1.2 ☐ 1.4 ☐ 1.6 ☐
Anti Squat	0° ☐ 3° (Alloy U9133) ☐



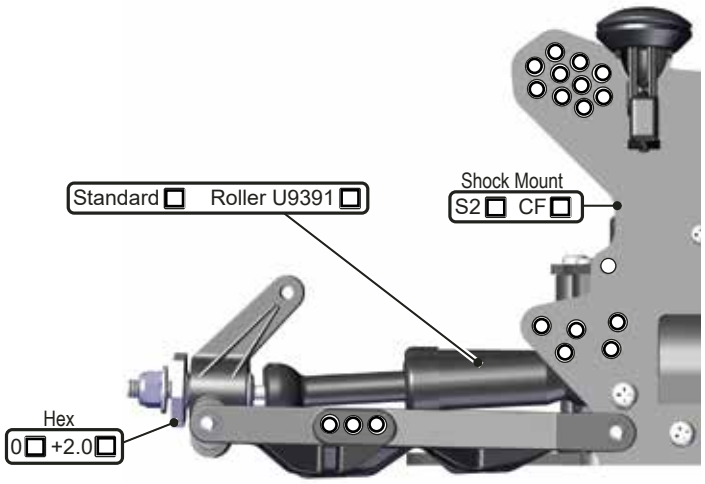

Rear Toe-in Insert

LH RH	Height	Actual	
2° 2	Low	5°	☐
1° 1	Low	4°	☐
0° 0	Low	3°	☐
0 0°	Low	3°	☐
1 1°	Low	2°	☐
2 2°	Low	1°	☐
2 2°	High	5°	☐
1 1°	High	4°	☐
0 0°	High	3°	☐
0° 0	High	3°	☐
1° 1	High	2°	☐
2° 2	High	1°	☐

EQUIPMENT

E.S.C.	
Servo	
RX	
LiPo	
Motor	
Timing	deg
Pinion	T
Spur	T
Pro Slipper	Y ☐ N ☐

CHASSIS

LiPo Position	1 ☐ 2 ☐ 3 ☐
Wing Mount	U3850 ☐
Alloy Bulkheads	U9111 ☐ U9139 ☐ U9162 ☐
Running Weight	g
Chassis	S2 ☐ C/F ☐

WEIGHTS

Notes:

SHOCKS

KEY: **i** = Internal, **e** = External, **V** = Vented, **S** = Sealed, **A** = Aeration

	FRONT	REAR
Cap	V ☐ S ☐ A ☐	V ☐ S ☐ A ☐
Oil	cSt	cSt
Valves		
Spring	lb/in	lb/in
Limiters (i)	mm	mm
Stroke	mm	mm
Limiters (e)	mm	mm
Sockets	Short ☐ Long ☐	Short ☐ Long ☐