Driver and Event

Name
Date
Event
Weather
Result

Electrics and Gearing

E.S.C
Servo
Reciever
Batteries
Motor
Spur Gear 98T ☐ 95T ☐
Pinion
LH Cell Position
Forward ☐ Backward ☐

Track Conditions

Surface
Grip Level
Track Condition

Wheels and Tyres

Rear Wheels
Rear Tyre
Rear Insert
Front Wheels
Front Tyre
Front Insert

Diff Type

	Diff Oil
Front Ball ☐ Gear ☐	
Rear Ball ☐ Gear ☐	

CAT KI

Additional Settings

Car Weight
Weights Added
Chassis Alloy ☐ Option ☐
NOTES

Rear Shocks

Oil | Spring | Shock Cap Sealed ☐ Vented ☐ Emulsion ☐
Piston
Drilled ☐ | Hole Size mm

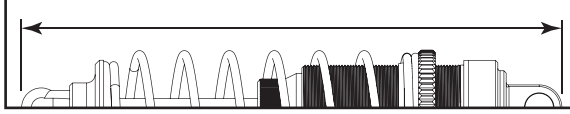

Shock Length mm

Front Shocks

Oil | Spring | Shock Cap Sealed ☐ Vented ☐ Emulsion ☐
Piston
Drilled ☐ | Hole Size mm

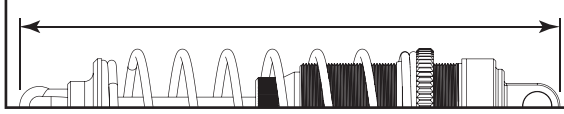

Shock Length mm

Rear Suspension

Anti roll bar No ☐ 1.00 ☐ 1.20 ☐ 1.40 ☐ 1.60 ☐
Wheelbase Short ☐ Med ☐ Long ☐

Rear Toe-in & Track Washers

0.00 Difference = 0.00° Toe-in ☐
0.50 Difference = 0.60° Toe-in ☐
1.00 Difference = 1.30° Toe-in ☐
1.50 Difference = 1.95° Toe-in ☐
2.00 Difference = 2.60° Toe-in ☐
2.50 Difference = 3.25° Toe-in ☐
3.00 Difference = 3.90° Toe-in ☐

Rear mm Front mm

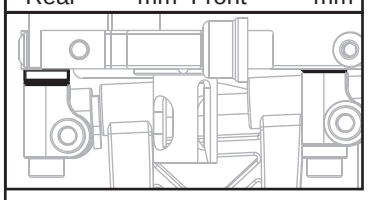

Blocks Moulded ☐ Alloy ☐

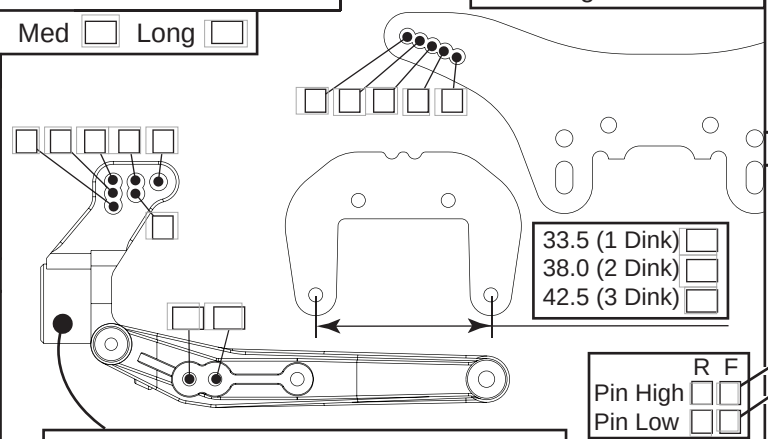

33.5 (1 Dink) ☐
38.0 (2 Dink) ☐
42.5 (3 Dink) ☐

Rear Hub Carrier Alloy ☐ Std ☐
Alloy Hub Carrier +1° ☐ -1° ☐

Camber at Ride Height Deg
Ride Height mm

R F
Pin High ☐ ☐
Pin Low ☐ ☐

Anti-squat Washers

0.00 Difference = 0.00° Toe-in ☐
0.50 Difference = 0.60° Toe-in ☐
1.00 Difference = 1.30° Toe-in ☐
1.50 Difference = 1.95° Toe-in ☐
2.00 Difference = 2.60° Toe-in ☐
2.50 Difference = 3.25° Toe-in ☐
3.00 Difference = 3.90° Toe-in ☐

Rear mm Front mm

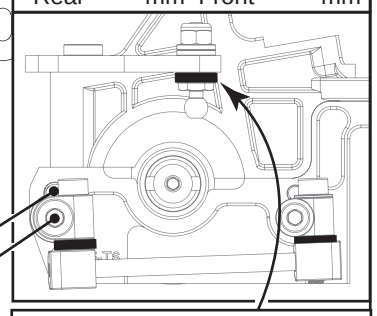

Link Washers mm

Front Suspension

Anti roll bar No ☐ 1.00 ☐ 1.20 ☐ 1.40 ☐ 1.60 ☐

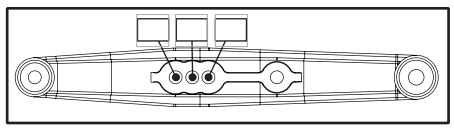

Track Washers mm

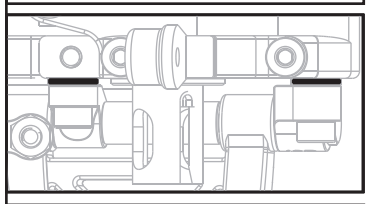

Blocks Moulded ☐ Alloy ☐

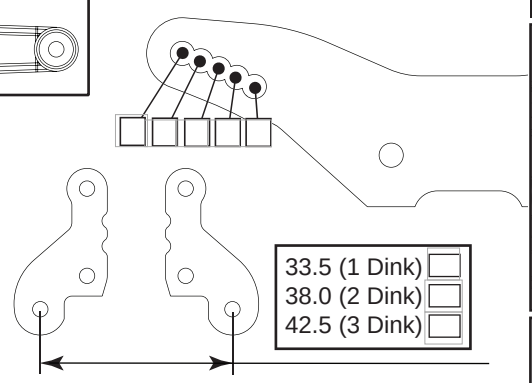

33.5 (1 Dink) ☐
38.0 (2 Dink) ☐
42.5 (3 Dink) ☐

Camber at Ride Height Deg
Ride Height mm

Toe-In Deg

Link Washers mm

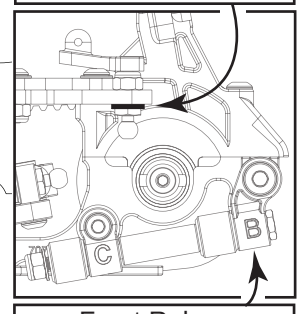

Front Rake
10.0 Deg ☐ 7.5 Deg ☐

Washers mm

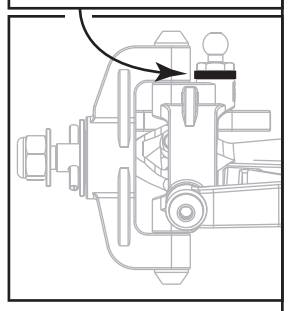

Front Yoke
(Kit)
12.5 ☐ 10.0 ☐ 7.5 ☐