Driver Details

Name	
Date	
Event / Track	
Weather	
Result	

Chassis and Electrics

Chassis	Kit ☐	Flex ☐	
Car Weight		g	
Front Topdeck	S2 2.0mm ☐	C/F 2.5mm ☐	C/F 3.0mm ☐
Rear Topdeck	2.5mm ☐	3.0mm ☐	
Sidepods	S2 ☐	C/F ☐	
Front Hex	-0.75 ☐ 0 ☐	0.75 ☐ 1.5 ☐	
Rear Hex	-0.75 ☐ 0 ☐	0.75 ☐ 1.5 ☐	
Bodyshell	Thickness	Rear Wing	
E.S.C		C/F Tray ☐	Brass Tray ☐
Servo			
Receiver		C/F Tray ☐	Brass Tray ☐
LiPo		Front ☐ Middle ☐	Rear ☐

Track Conditions

Grip Level	High ☐	Medium ☐	Low ☐
Type	Tight ☐	Open ☐	Mixed ☐
Surface	Clay ☐ Astro ☐	Grass ☐ Mixed ☐	Carpet ☐
Condition	Smooth ☐	Bumpy ☐	Mixed ☐
Jumps	Small ☐ Medium ☐	Large ☐	Mixed ☐

Wheels, Tyres and Inserts

Front Wheels	Rear Wheels
Front Tyres	Rear Tyres
Front Inserts	Rear Inserts

Front Shocks

Oil.....cSt	Spring .....lb/in	Shock Cap Vented ☐	Sealed ☐ Aeration ☐
Piston..... Drilled ☐	Hole Size.....mm		
Internal Limiters.....mm	Kashima Body No ☐ Yes ☐		

.....mm



Notes

Front Diff

Height	High ☐	Mid ☐	Low ☐
Oil	cSt	2 Gear ☐	4 Gear ☐
Kit ☐	Alloy ☐	Carbon ☐	

Rear Diff

Height	High ☐	Mid ☐	Low ☐
Oil	cSt	2 Gear ☐	4 Gear ☐
Kit ☐	Alloy ☐	Carbon ☐	

Motor and Gearing

Motor	
Rotor Diameter	
Timing	
Spur Size	
Pinion Size	

Other settings

Rear Wing Gurney Height		Wing Type
Front Wing	Small ☐	Big ☐
Front Wing Gurney Height		
Slipper	2Plate ☐	3Plate ☐

Rear Shocks

Oil.....cSt	Spring .....lb/in	Shock Cap Vented ☐	Sealed ☐ Aeration ☐
Piston..... Drilled ☐	Hole Size.....mm		
Internal Limiters.....mm	Kashima Body No ☐ Yes ☐		
Shock Stand Off Spacing .....mm			

.....mm



Front

Anti Roll Bar None ☐ 1.2 ☐ 1.4 ☐ 1.6 ☐ 1.8 ☐ 1.9 ☐ 2.0 ☐ 2.1 ☐

Ride Height .....mm

Camber at Ride Height .....Deg

Toe .....Deg

Yoke 8° ☐ 10° ☐ 12° ☐

Yoke Med ☐ Stiff ☐ Alloy ☐

Bumper Stiff ☐ Carbon ☐

Link Washers .....mm

Wishbone Med ☐ Stiff ☐ Carbon ☐

Wheelbase Short ☐ Long ☐

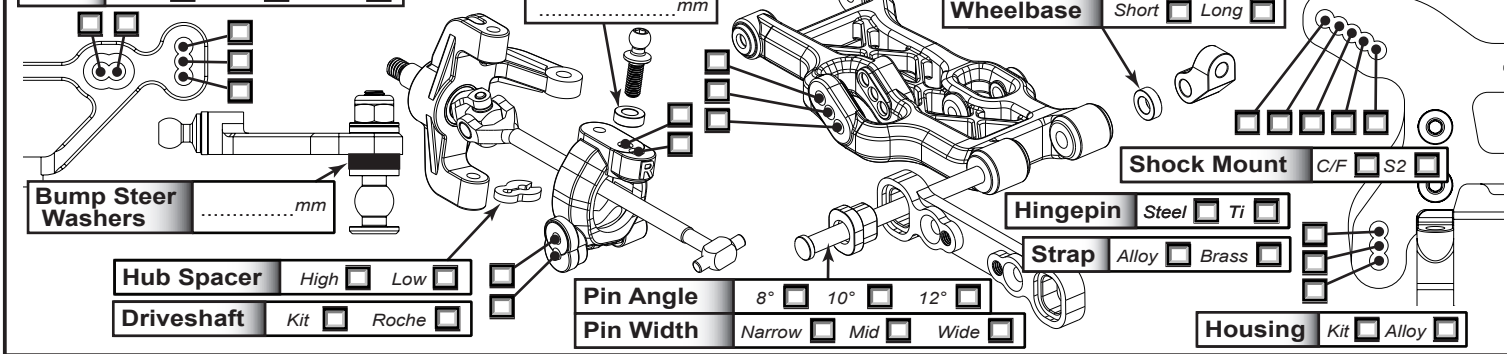

Bump Steer Washers .....mm

Shock Mount C/F ☐ S2 ☐

Hingepin Steel ☐ Ti ☐

Strap Alloy ☐ Brass ☐

Hub Spacer High ☐ Low ☐

Driveshaft Kit ☐ Roche ☐

Pin Angle 8° ☐ 10° ☐ 12° ☐

Pin Width Narrow ☐ Mid ☐ Wide ☐

Housing Kit ☐ Alloy ☐

Rear

Anti Roll Bar None ☐ 1.2 ☐ 1.3 ☐ 1.4 ☐ 1.6 ☐ 1.8 ☐ 1.9 ☐ 2.0 ☐ 2.1 ☐

Shock Mount C/F ☐ S2 ☐

Toe In

4° ☐ 3.5° ☐ 3° ☐ 2.5° ☐

2° ☐ 1.5° ☐ 1° ☐ 0.5° ☐

Ride Height .....mm

Camber at Ride Height .....Deg

Wheelbase Short ☐ Med ☐ Long ☐

Anti-squat 1° ☐ 2° ☐ 3° ☐ 4° ☐

Hub Washers .....mm

Driveshaft U/J ☐ CVD ☐

Steel Washer Required

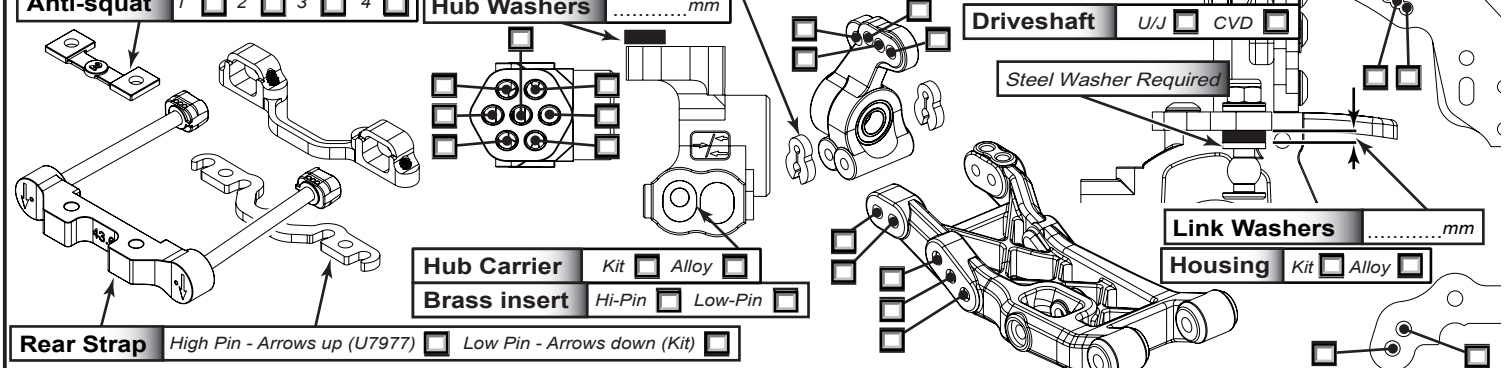

Link Washers .....mm

Housing Kit ☐ Alloy ☐

Hub Carrier Kit ☐ Alloy ☐

Brass insert Hi-Pin ☐ Low-Pin ☐

Rear Strap High Pin - Arrows up (U7977) ☐ Low Pin - Arrows down (Kit) ☐

Gearbox Riser Yes ☐ No ☐

Wishbone Med ☐ Stiff ☐ Carbon ☐

Hingepin Steel ☐ Ti ☐

Link Mount Kit ☐ Alloy ☐