SET UP SHEET

Schumacher

COUGAR 2 WORKS Classic

Driver: | Date: | Event/Track:

Qualify: | Final: | Best Lap:

TRACK TYPE

Grip Level	High ☐	Medium ☐	Low ☐
Type	Tight ☐	Open ☐	Mixed ☐
Condition	Flat ☐	Bumpy ☐	Mixed ☐
Surface	Clay ☐	Long Astro ☐	Carpet ☐
	Grass ☐	Short Astro ☐	Mixed ☐
Weather			

TYRES

	Front	Rear
Tyres		
Wheels		
Inserts		
Sidewall Glue	Front ☐	Rear ☐

Notes:

Notes:

FRONT SUSPENSION

KEY: **P** = Plastic, **A** = Alloy, **B** = Brass, **F/G** = Fibre Glass, **C/F** = Carbon Fibre, **S2** = Schumacher Composite, **M** = Medium, **S** = Stiff, **Sh** = Short, **H** = High, **L** = Low, **F** = Front, **R** = Rear, **Y** = Yes, **N** = No

Ride Height		mm
Toe		deg In ☐ Out ☐
Camber		deg
Bump Steer Washers		mm
Anti Roll Bar	(U8818)	Yes ☐ No ☐
Twin Bearing Kit	(U8817)	Yes ☐ No ☐
Carbon Track Rod	(U8821)	Yes ☐ No ☐

Notes:

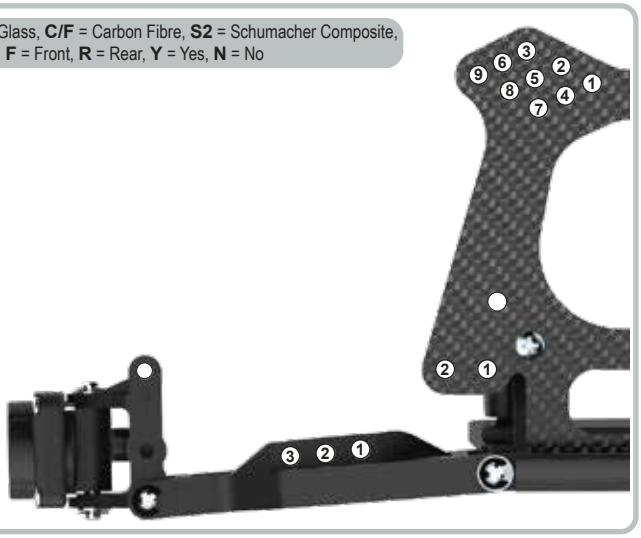

REAR SUSPENSION

KEY: **P** = Plastic, **A** = Alloy, **B** = Brass, **F/G** = Fibre Glass, **C/F** = Carbon Fibre, **S2** = Schumacher Composite, **M** = Medium, **S** = Stiff, **Sh** = Short, **H** = High, **L** = Low, **F** = Front, **R** = Rear, **Y** = Yes, **N** = No

Ride Height		mm
Camber		deg
Anti-squat		mm
Anti Roll Bar	(U8819)	Yes ☐ No ☐
Shock Tower Position		Low ☐ Medium ☐ High ☐
Alloy Pivot Block		Yes ☐ No ☐

Notes:

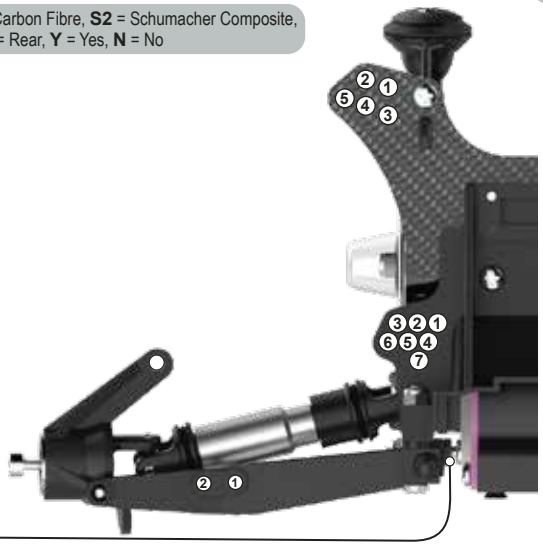

Rear Toe | mm

TRANSMISSION

Motor	
Rotor Dia.	mm
Timing	deg
Pinion	t
Spur	t
Upgraded Slipper	Y ☐ N ☐

Notes:

CHASSIS

Running Weight	g
Battery Position	Fwd ☐ Rwd ☐
Wing Mount Type	

Notes:

EQUIPMENT

E.S.C.	
Servo	
RX	
LiPo	
Bodyshell	

WEIGHTS

Under LiPo Y ☐ N ☐

Notes:

SHOCKS

KEY: **i** = Internal, **e** = External

	FRONT	REAR
Oil	cSt	cSt
Piston Holes Open (F)	1 ☐ 2 ☐ 3 ☐ 4 ☐	
Piston Holes Open (R)		1 ☐ 2 ☐ 3 ☐ 4 ☐
Spring	lb/in	lb/in
Limiters (i)	mm	mm
Stroke	mm	mm
Limiters (e)	mm	mm

Notes: