SET UP SHEET

Schumacher

COUGAR Classic

Driver: **Date:** **Event/Track:**

Qualify: **Final:** **Best Lap:**

TRACK TYPE

Grip Level	High ☐	Medium ☐	Low ☐
Type	Tight ☐	Open ☐	Mixed ☐
Condition	Flat ☐	Bumpy ☐	Mixed ☐
Surface	Clay ☐	Long Astro ☐	Carpet ☐
	Grass ☐	Short Astro ☐	Mixed ☐
Weather			

TYRES

	FRONT	REAR
Tyres		
Wheels		
Inserts		

Notes:

Notes:

FRONT SUSPENSION

KEY: **P** = Plastic, **A** = Alloy, **B** = Brass, **F/G** = Fibre Glass, **C/F** = Carbon Fibre, **S2** = Schumacher Composite, **M** = Medium, **S** = Stiff, **Sh** = Short, **H** = High, **L** = Low, **F** = Front, **R** = Rear, **Y** = Yes, **N** = No

Ride Height		mm
Toe		deg In ☐ Out ☐
Camber		deg
Bump Steer Washers		mm
Ball Raced Steering	Y ☐	N ☐

Notes:

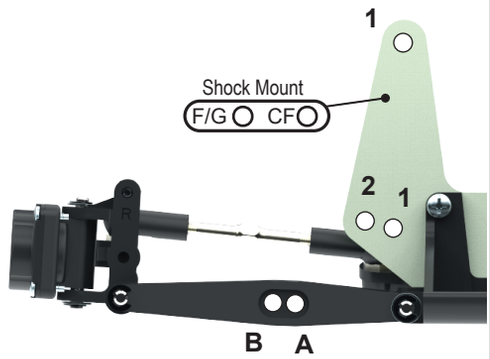

REAR SUSPENSION

KEY: **P** = Plastic, **A** = Alloy, **B** = Brass, **F/G** = Fibre Glass, **C/F** = Carbon Fibre, **S2** = Schumacher Composite, **M** = Medium, **S** = Stiff, **Sh** = Short, **H** = High, **L** = Low, **F** = Front, **R** = Rear, **Y** = Yes, **N** = No

Ride Height		mm
Camber at Ride Height		deg

Notes:

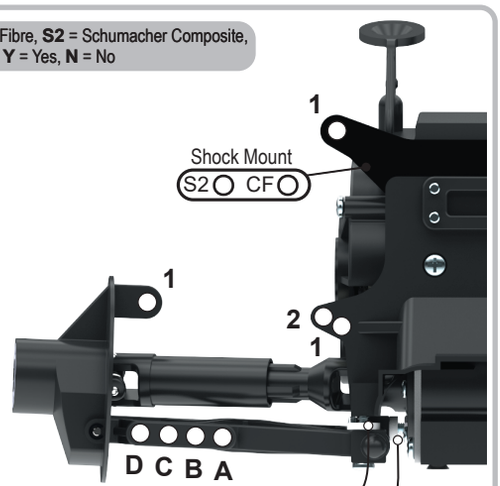

Anti Squat		mm
Rear Toe		mm

TRANSMISSION

Motor		
Rotor Dia.		mm
Timing		deg
Pinion		t
Spur		t
TransUpgrade	Y ☐	N ☐
Slipper Clutch	Y ☐	N ☐

Notes:

CHASSIS

Running Weight		g

Notes:

EQUIPMENT

E.S.C.	
Servo	
RX	
LiPo	
Bodyshell	

WEIGHTS

Under LiPo	Y ☐	N ☐

Notes:

SHOCKS

KEY: **i** = Internal, **e** = External

	FRONT	REAR
Oil	cSt	cSt
Piston		
Spring	lb/in	lb/in
Limiters (i)	mm	mm
Stroke	mm	mm
Limiters (e)	mm	mm

Notes:

