COUGAR LAYDOWN

PRO 1/10th 2WD Off-Road Buggy

Stock Spec Instruction Manual





Schumacher racing-cars.com

71-73 Tenter Road
Moulton Park
Northampton
NN3 6AX
U.K.

S1522 ISS1

STEP 20

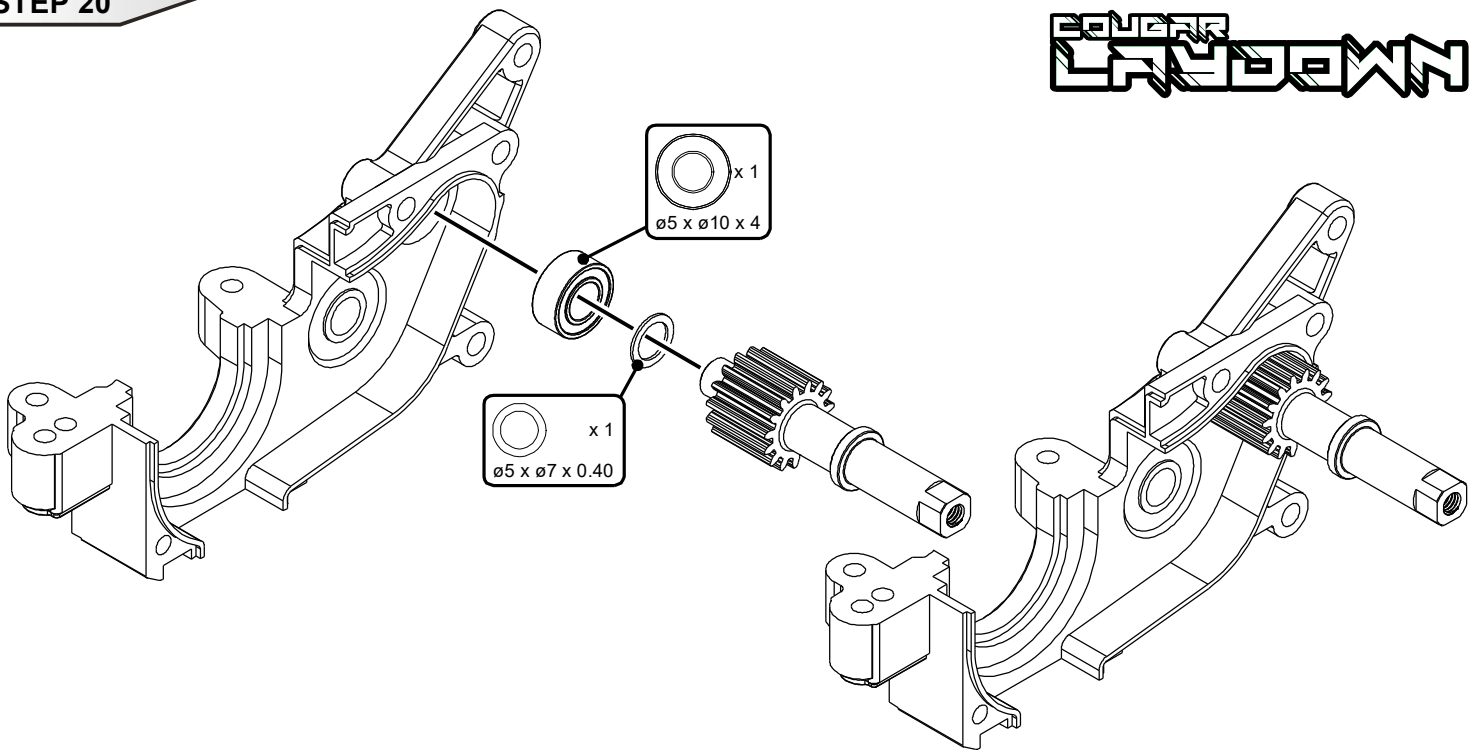

STEP 22

B

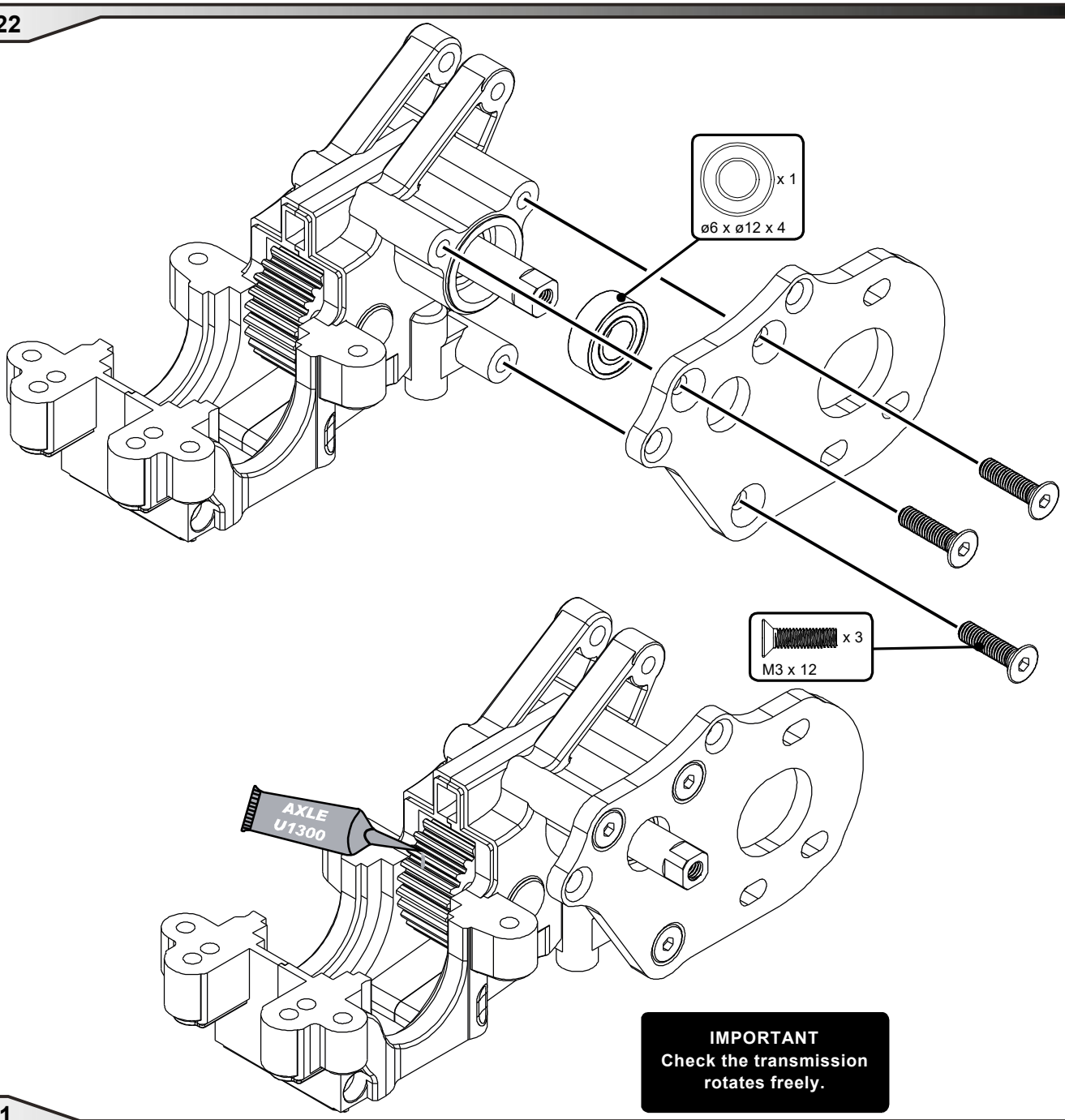

IMPORTANT
Check the transmission rotates freely.

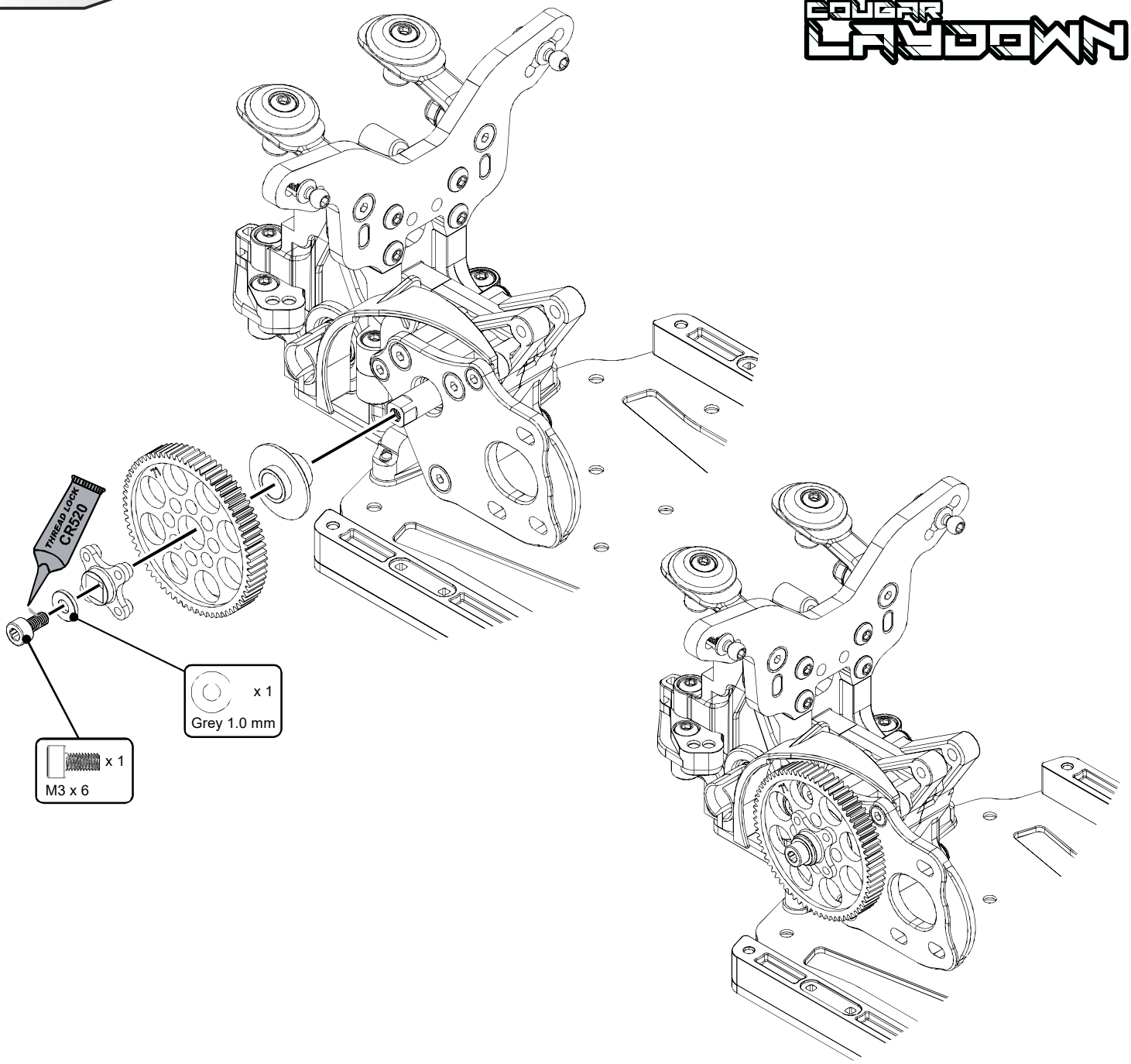
THREAD LOCK
CR320
x 1
Grey 1.0 mm
x 1
M3 x 6


Schumacher

U7676 - *Alloy Layshaft Conversion (Stock) - Cougar-Laydown*



U7666 - *Alloy Layshaft (Stock) - Cougar-Laydown*

AX003 - *Aerox Body Shell KC/KD Ultra Light*



U7670 - *Lockout 76T Spur Gear - Cougar-Laydown*
U7671 - *Lockout 71T Spur Gear - Cougar-Laydown (Kit)*



U7869 - *C/F Right Hand Lower Trans - Cougar Laydown*

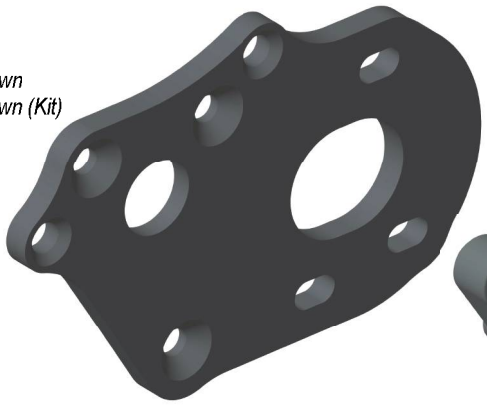

U7667- *Alloy Drive Plate (Stock) - Cougar-Laydown*

U7669 - *C/F Motor Plate (Stock) - Cougar-Laydown*

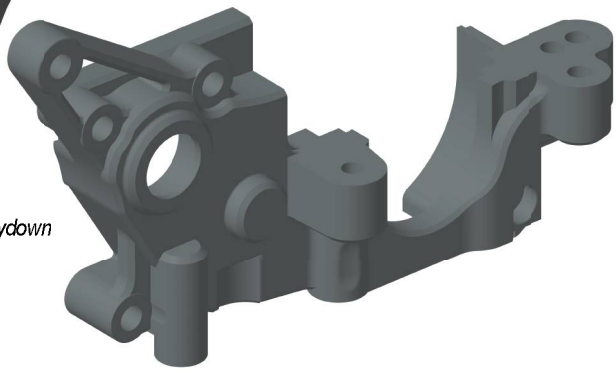

U7868 - *C/F Left Hand Lower Trans - Cougar Laydown*

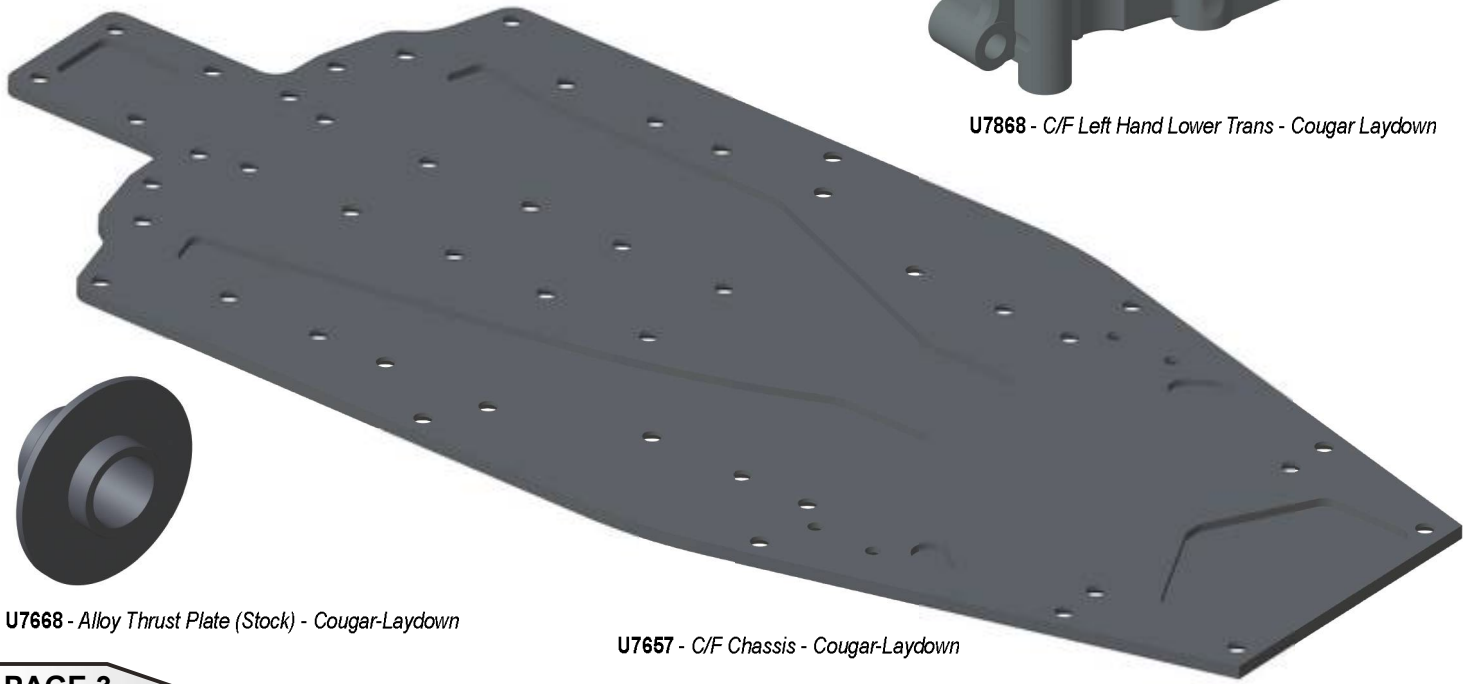

U7668 - *Alloy Thrust Plate (Stock) - Cougar-Laydown*

U7657 - *C/F Chassis - Cougar-Laydown*