COUGAR SV
Takes 2wd to the next level

Driver and Event

Name
Date
Event
Weather
Result

Track Conditions

Surface
Grip Level
Track Condition

Driver Notes

Electrics and Gearing

E.S.C
Servo
Reciever
Batteries
Motor
Spur | Pinion
Ext Gears 34/22 ☐ 33/23 ☐ 32/24 ☐

Wheels and Tyres

Rear Wheels
Rear Tyre
Rear Insert
Front Wheels
Front Tyre
Front Insert

Differential Height

High ☐ Low ☐

Topdeck

Stiff ☐ Medium ☐ Soft ☐

Rear Shocks

Oil | Spring
Ball Socket: Short ☐ Long ☐
Piston Holes 2 ☐ 3 ☐ 4 ☐ 5 ☐ 6 ☐

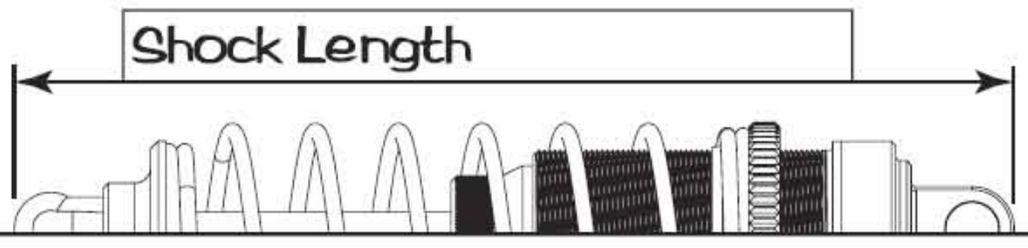

Front Shocks

Oil | Spring
Piston Holes 2 ☐ 3 ☐ 4 ☐ 5 ☐ 6 ☐

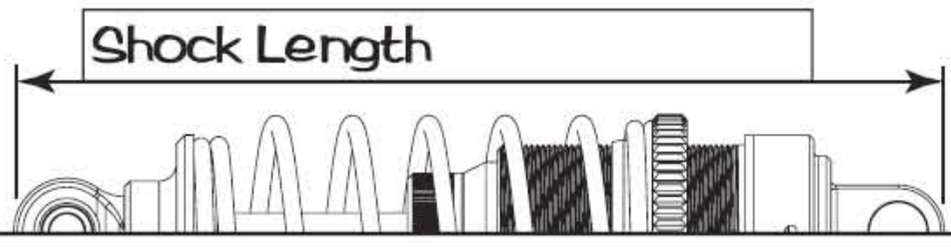

Rear Suspension

Anti roll bar No ☐ 1.20 ☐ 1.40 ☐ 1.60 ☐

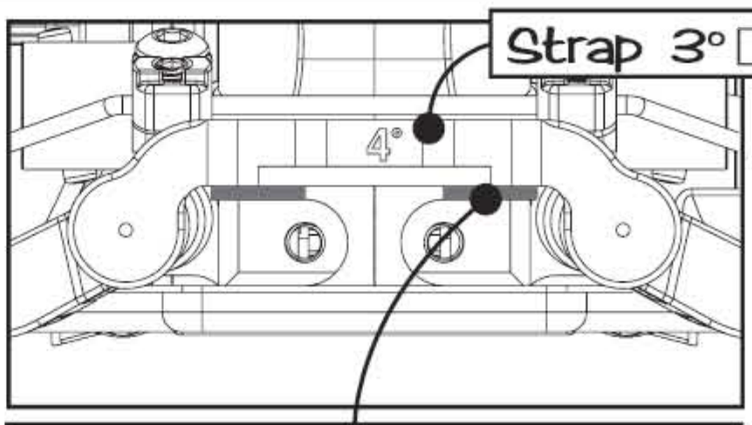

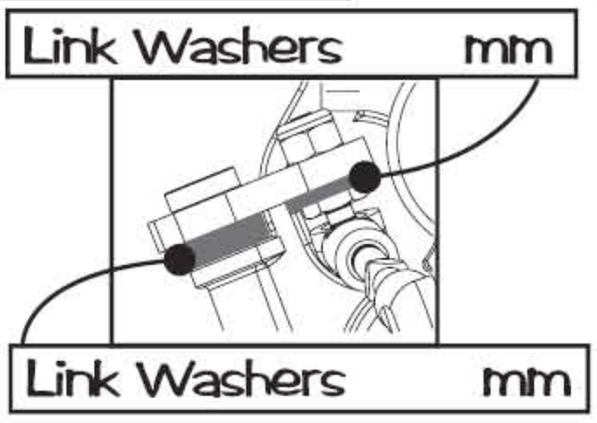

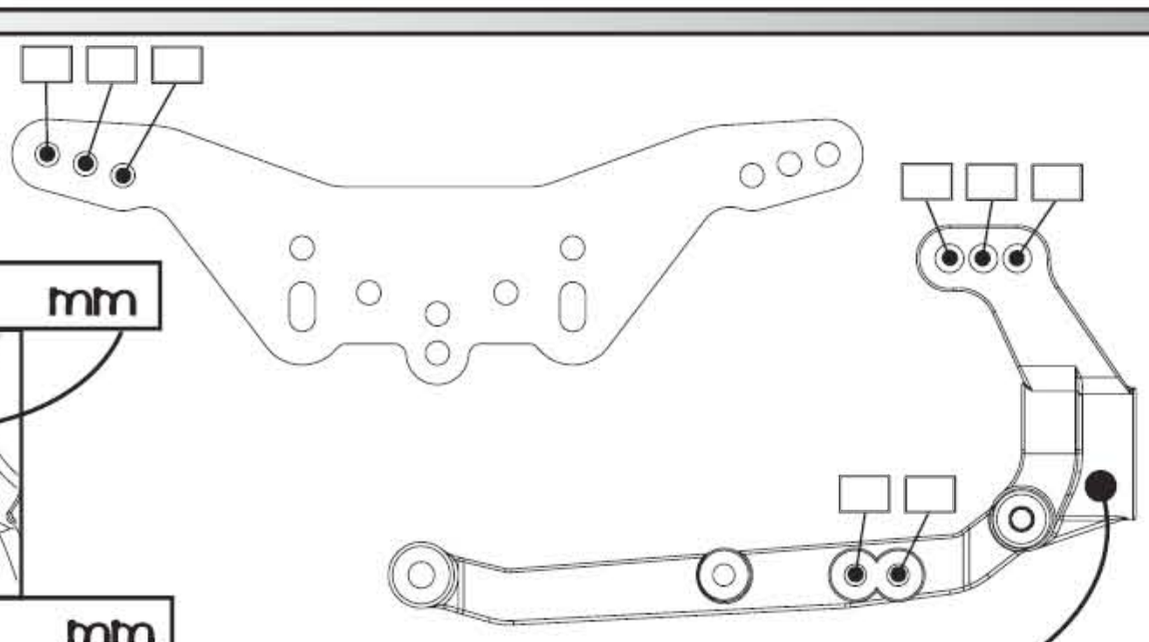

Rear Hub Carrier Alloy ☐ Std ☐
Alloy Hub Carrier +1° ☐ -1° ☐

Shock Postion	Front ☐	Rear ☐
Wheelbase	Short ☐ Med ☐	Long ☐
Rear Camber at Ride Height		

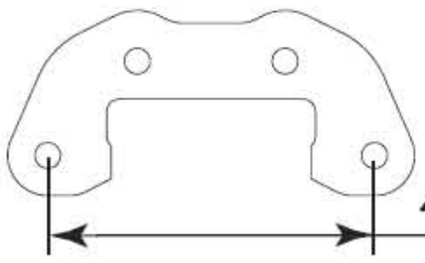

49 ☐ 44 ☐ 39 ☐ 34 ☐

Front Suspension

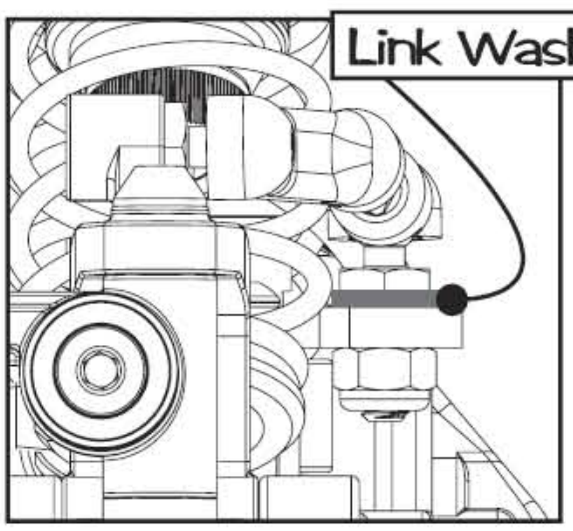

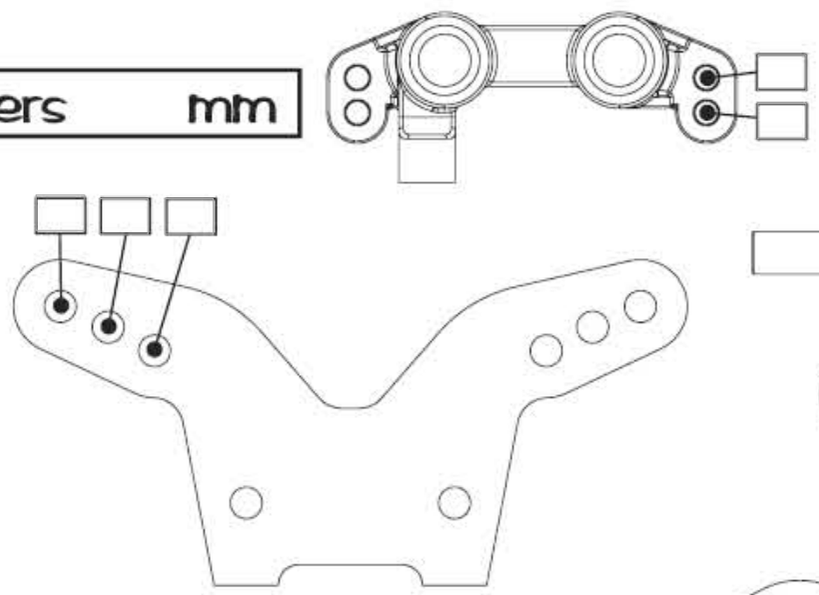

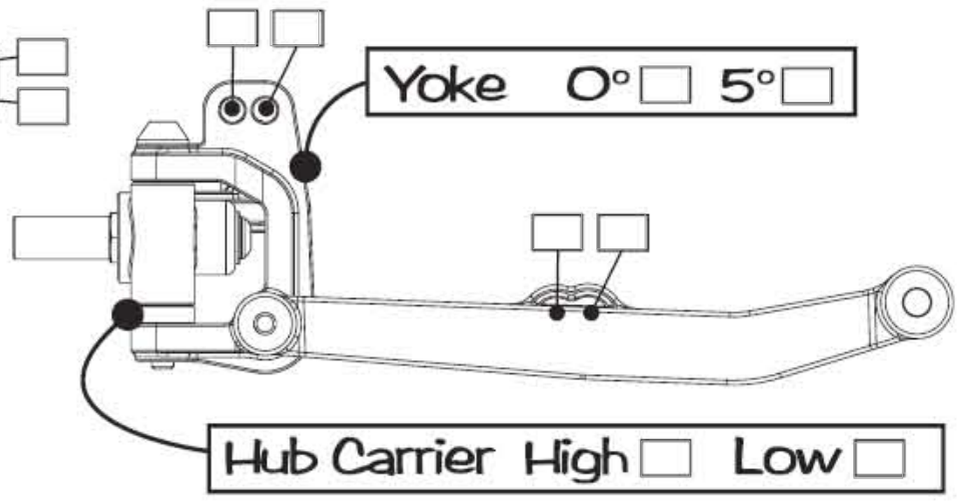

Front Camber at Ride Height
Front Toe In

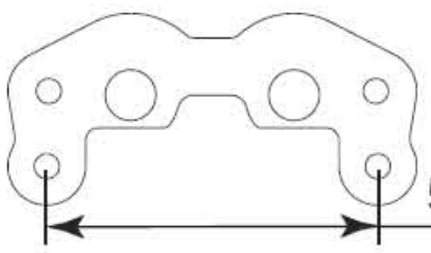

50.5 ☐ 45.5 ☐ 40.5 ☐