Nitro FUSION

leads by example

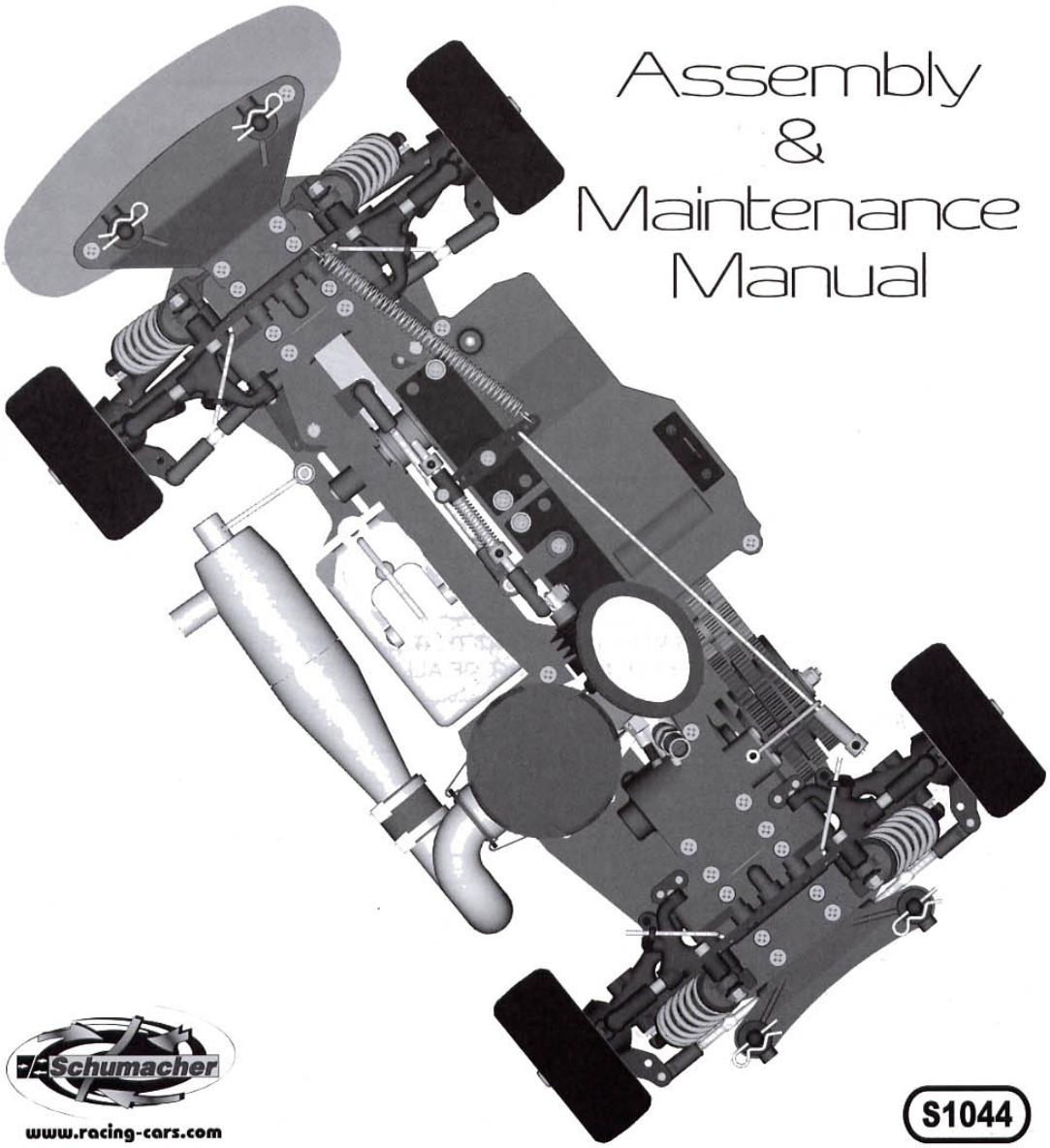

Assembly & Maintenance Manual

Schumacher

www.racing-cars.com

S1044

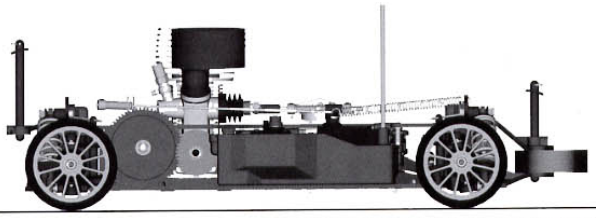

Schumacher

Nitro FUSION

IMPORTANT SAFETY NOTES

1. This product is not suitable for children under 14 years of age unless supervised by an adult.
2. Select an area for assembly that is away from reach of small children. The parts are small and can be swallowed by children causing choking and possible internal injuries.
3. Shock fluids, grease and adhesives should be kept out of children's reach. They are not toxic, but were not intended for human consumption.
4. Exercise care when using any hand tools, sharp instruments and power tools during construction.
5. Carefully read all manufacturers warnings and cautions for any glues or paints that may be used for assembly purposes.

Do not use excessive force when tightening the self-tapping screws, or you may strip the thread in the plastic. It is recommended to stop tightening it when the threaded part on the screw goes into the plastic part and you feel some resistance from the tightening. Screws can be made easier to tighten if a drop of oil is used.

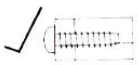

Good

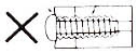

Over tighten and may strip the thread in the plastic

ADDITIONAL ITEMS REQUIRED

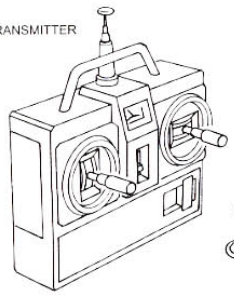

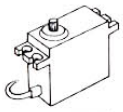

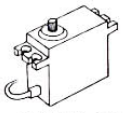

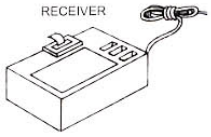



SEE WARNING SHEET





ALKALINE "AA" CELLS (FOR RADIO CONTROL)



POLYCARBONATE SPRAY PAINT FOR BODYSHELL

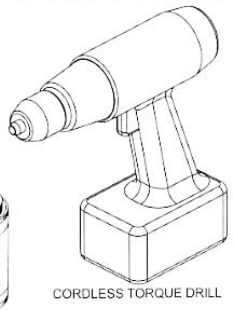

CORDLESS TORQUE DRILL

FOR BEST PERFORMANCE, IT IS VERY IMPORTANT THAT GREAT CARE IS TAKEN TO ENSURE THE FREE MOVEMENT OF ALL PARTS.

TOOLS REQUIRED

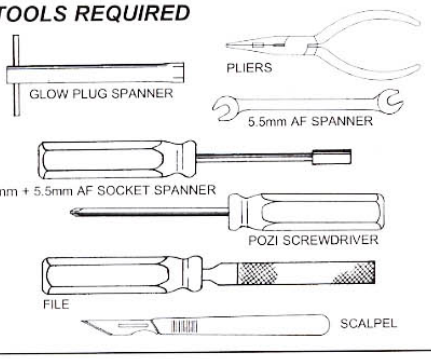

RULER *INCHES & MILLIMETRES*

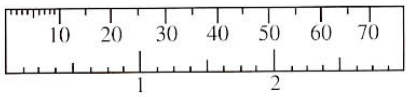

In line with our policy of continous development the exact specification of the kit may vary.
In the unlikely event of any problems with your kit please contact the model shop where you purchased it.

Schumacher

Nitro FUSION

RADIO INSTALLATION
Parts required:

(A) 

No4 1/2 Csk Head x 6

1 Remove Radio Box

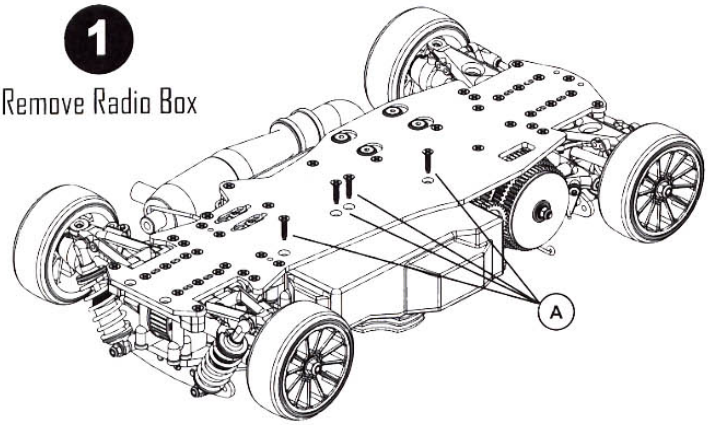

2 Remove Lid

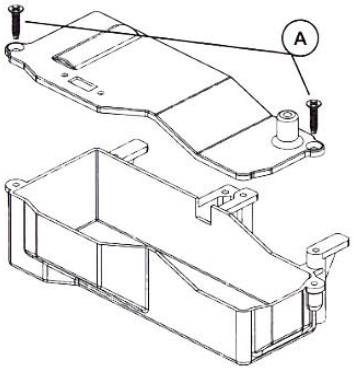

3 Assemble Radio Switch

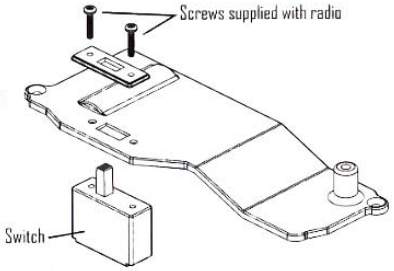

4 Install Receiver Battery & Receiver

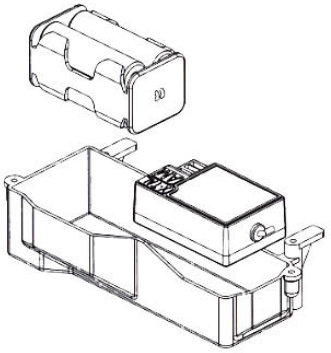

ENGINE SETTINGS

Schumacher

Nitro FUSION



SETTING IDLE SPEED

TRANSMITTER - ZERO/NEUTRAL



ENGINE STALLS = SCREW IN THROTTLE STOP SCREW TO INCREASE REVS

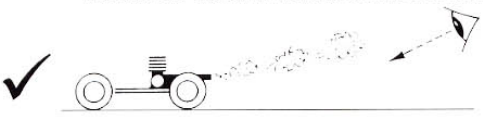

CAR DOES NOT MOVE AND SOME SMOKE = OK

OK



CAR EDGES FORWARD = UNSCREW THROTTLE STOP SCREW TO LOWER REVS

IDLE SPEED SETTING

0.25mm to 0.50mm Slide Open

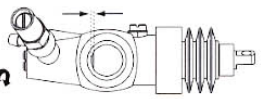

SET IDLE SPEED AS HIGH AS POSSIBLE WITHOUT CAR EDGING FORWARD

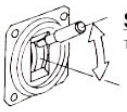

SETTING LOW SPEED MIXTURE

TRANSMITTER - STOP-GO (MAX ACCELERATION)

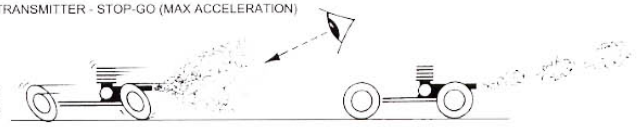

TOO MUCH SMOKE AND SLOW ACCELERATION = SCREW IN LOW SPEED MIXTURE SCREW (TOO RICH)

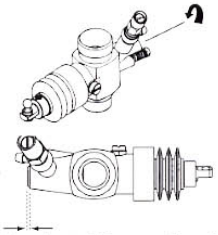

0.40mm in, to 0.40mm out from flush



OK

SOME SMOKE AND GOOD ACCELERATION = OK

LOW SPEED MIXTURE SETTING

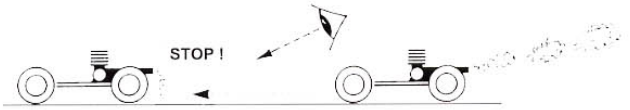

CAR EDGES FORWARD AND THEN STALLS = UNSCREW LOW SPEED MIXTURE SCREW (TOO LEAN)



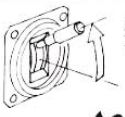

SETTING HIGH SPEED MIXTURE

TRANSMITTER - MAX FULL SPEED

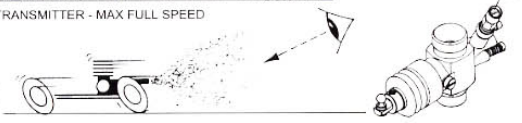

TOO MUCH SMOKE AND SLOW SPEED = SCREW IN HIGH SPEED MIXTURE SCREW (TOO RICH)

HIGH SPEED MIXTURE SETTING

1½ Turns Open to 2½ Turns Open from fully closed.

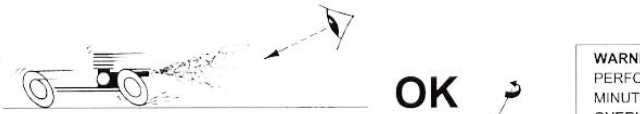

OK

SOME SMOKE AND GOOD SPEED = OK

WARNING: IF CAR BEGINS TO LOSE PERFORMANCE AFTER A FEW MINUTES IT IS PROBABLY **OVERHEATING** AND YOU **MUST STOP** AND UNSCREW HIGH SPEED MIXTURE SCREW 90°

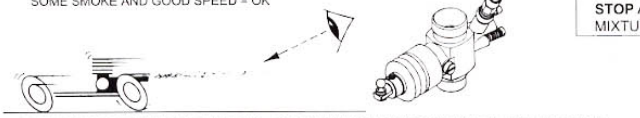

TOO LITTLE SMOKE AND SLOW SPEED = UNSCREW HIGH SPEED MIXTURE SCREW (TOO LEAN)

N.B. The settings given are for a starting point only.
SMALL adjustments may be required depending on conditions.

DO NOT ALLOW THE NOISE TO ANNOY OTHERS
DO NOT OPERATE THE "CAR" ON THE PUBLIC HIGHWAY
DO NOT OPERATE THE "CAR" IN A CONFINED SPACE OR CROWDED AREA
DO NOT RUN ENGINE WITHOUT AIR FILTER - SERIOUS DAMAGE WILL RESULT
DO NOT ALLOW THE TRANSMITTER OR RECEIVER BATTERIES TO RUN FLAT

Schumacher
Nitro FUSION

TROUBLE SHOOTING

THE FOLLOWING INFORMATION WILL HELP SOLVE ANY PROBLEMS WHEN RUNNING AND MAINTAINING YOUR CAR

PROBLEM	CAUSE	REMEDY
ENGINE DOES NOT START	FUEL TANK EMPTY, ENGINE NOT PRIMED	FILL TANK AND REPRIME ENGINE
	FLAT GLOW BATTERY OR DEAD GLOW PLUG	RECHARGE BATTERY AND/OR REPLACE PLUG
	CLOGGED AIR FILTER	CLEAN OR REPLACE AIR FILTER
	OVER PRIMED, CYLINDER FLOODED WITH FUEL	REMOVE GLOW PLUG THEN TURN ENGINE OVER TO DISCHARGE FUEL
	INCORRECT CARBURETTOR ADJUSTMENT	CHECK SETTINGS
	INCORRECT LINKAGE ADJUSTMENT	RE ADJUST LINKS WITH SERVO IN NEUTRAL SEE MANUAL
	WORN ENGINE - PISTON LINER	REPLACE PISTON LINER
ENGINE STALLS	FUEL TANK EMPTY	FILL FUEL TANK
	CLOGGED AIR FILTER	CLEAN OR REPLACE AIR FILTER
	INCORRECT CARBURETTOR ADJUSTMENT	RE ADJUST CARBURETTOR SETTINGS
	ENGINE OVER HEATING	ALLOW ENGINE TO COOL DOWN AND OPEN HIGH SPEED MIXTURE SCREW 90°
POOR ENGINE RESPONSE	INCORRECT CARBURETTOR ADJUSTMENTS	RE ADJUST CARBURETTOR SETTINGS
	FUEL TANK PRESSURE PIPE LOOSE, DETACHED OR DAMAGED OR BLOCKED	REPLACE OR REFIT PRESSURE PIPE
	WORN ENGINE - PISTON LINER	REPLACE PISTON LINER
POOR CAR CONTROL	WEAK BATTERIES IN TRANSMITTER	RECHARGE OR REPLACE BATTERIES
	WEAK RECEIVER BATTERIES	RECHARGE OR REPLACE BATTERIES
	TRANSMITTER AERIAL NOT FULLY EXTENDED	EXTEND AERIAL
	POOR ADJUSTMENT OF LINKS	RE-ADJUST LINK TO INSTRUCTIONS

RUNNING ENGINE IN FROM NEW

TO ENSURE YOUR ENGINE HAS A LONG LIFE THE ENGINE NEEDS TO BE "RUN IN" BEFORE BEING "RACED". RUN THE CAR FOR 2 OR 3 TANK FULLS, AT A RICH CARB SETTING ON HALF THROTTLE, DO NOT USE FULL THROTTLE

WARNING:

THE LIMITED SLIP DIFFERENTIAL DESIGN CAN BE DAMAGED BY CONTINUOUSLY SPINNING ONE REAR WHEEL OR BY SPINNING THE CAR ROUND IN " DONUTS" FOR TOO LONG. THE DIFFERENTIAL WILL ALSO BE DAMAGED IF IT IS ALLOWED TO SLIP WHILE DRIVING THE CAR. IF ANY SLIP OCCURS, STOP AND ADJUST IT BEFORE YOU DAMAGE IT

IMPORTANT - REGULAR MAINTENANCE

CHECK DIFFERENTIAL ADJUSTMENT, CHECK ALL SCREWS ARE TIGHT, CHECK GEAR MESH ADJUSTMENT

Schumacher

Nitro FUSION

SHOCK ASSEMBLY
Parts required:

- (A) Outer Piston x 4
- (B) Inner Piston x 4
- (C) Spacer x 4
- (D) Bobbin x 4
- (E) Seal Housing x 4
- (F) "E" clip x 8

1

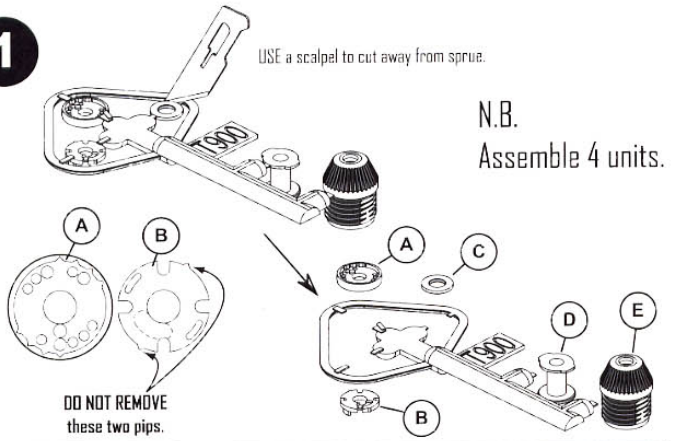

2

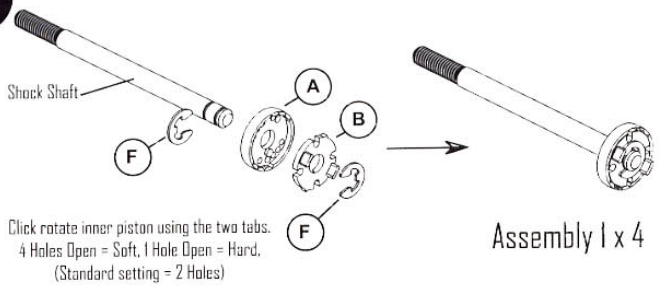

3

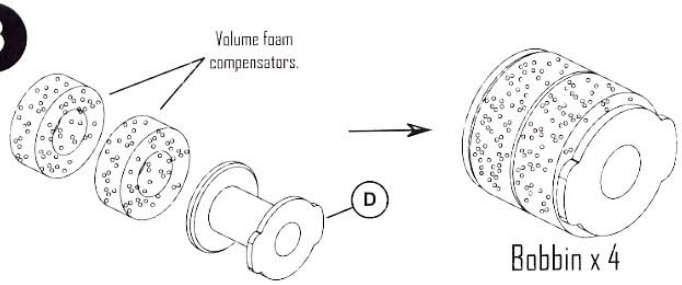

4

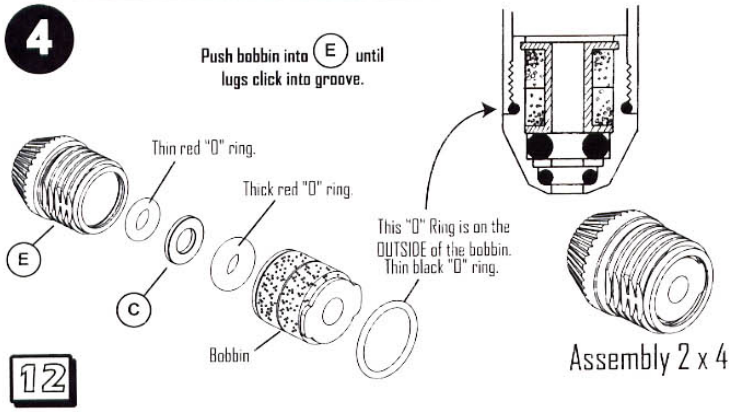

Schumacher

Nitro FUSION

SHOCK ASSEMBLY
Parts required:

(A) Ball Socket x 4

5

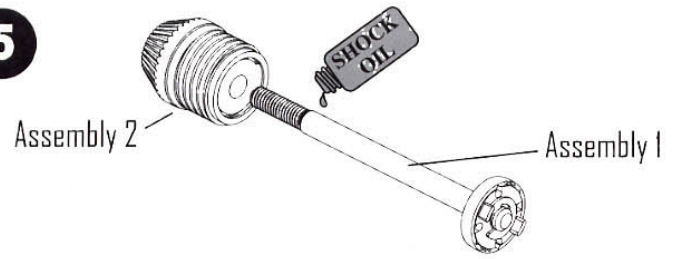

6

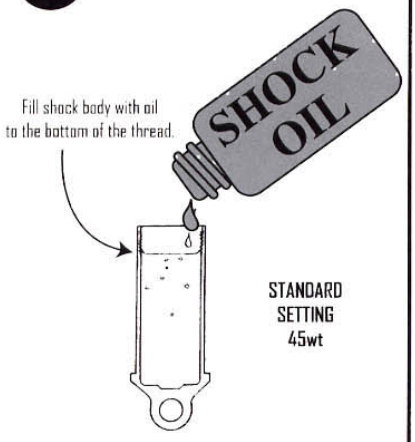

Make 4

7

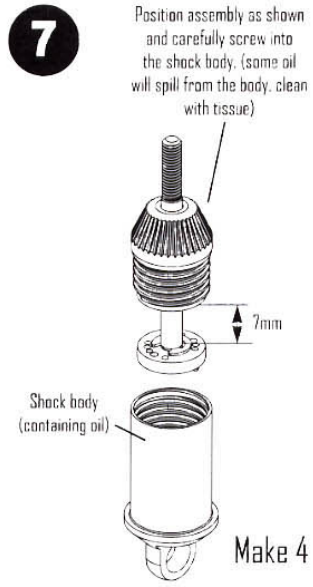

Make 4

8

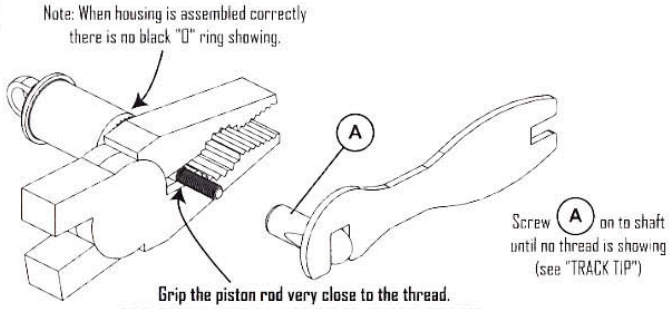

9

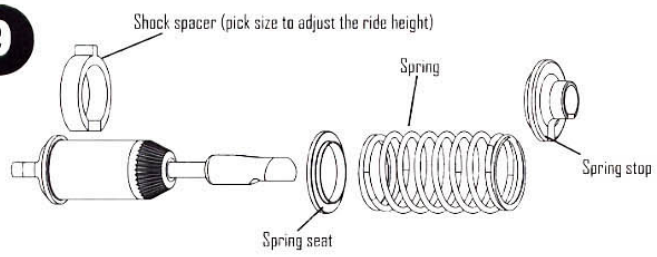

Schumacher

Nitro FUSION

FRONT & REAR DIFFERENTIAL SERVICE

- (A) 5 x 9 x 3 Ball Race x 1
- (B) Thrust Race Cage x 1
- (C) Thrust Washer x 2
- (D) 1/16th Dia Diff Ball x 8
- (E) Diff Disc Spring x 6

1

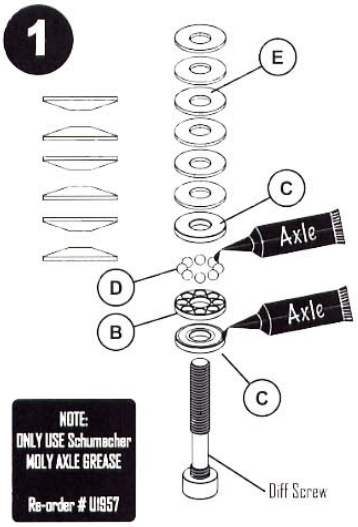

NOTE:
ONLY USE Schumacher
MOLY AXLE GREASE
Re-order # U1957

2

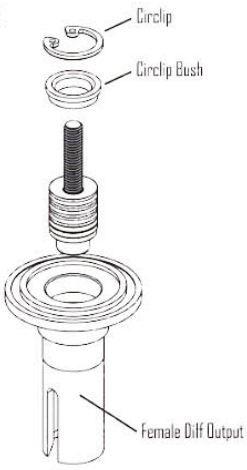

3

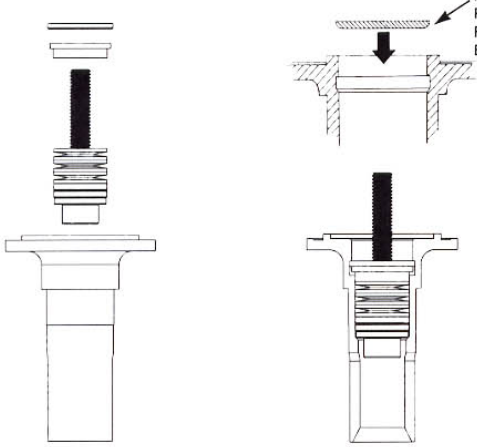

4

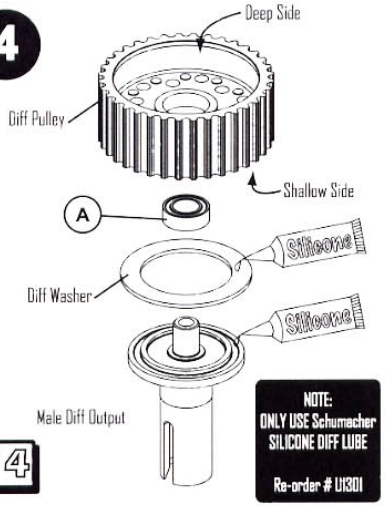

NOTE:
ONLY USE Schumacher
SILICONE DIFF LUBE
Re-order # U1301

5

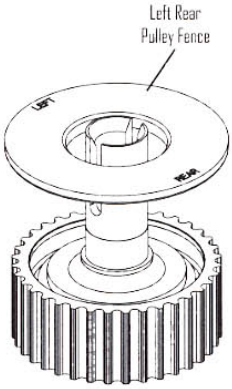

Schumacher

Nitro FUSION

FRONT & REAR DIFFERENTIAL SERVICE

- (A) 2.5mm Dia Diff Ball x 12
- (B) Thin Sim x 1
- (C) 5 x 9 x 3 Ball Race x 1
- (D) M3 x 6 Grub Screw x 1

7

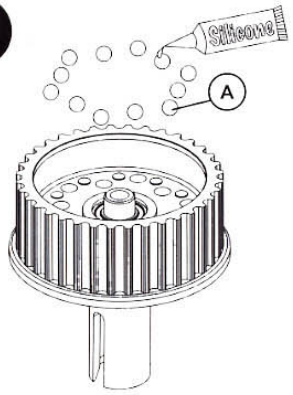

8

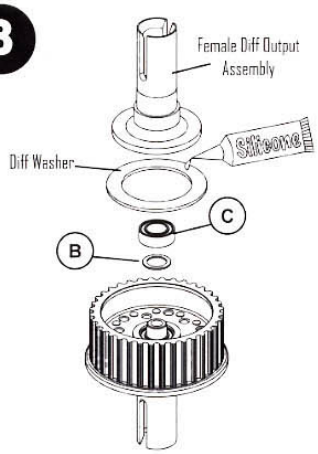

9

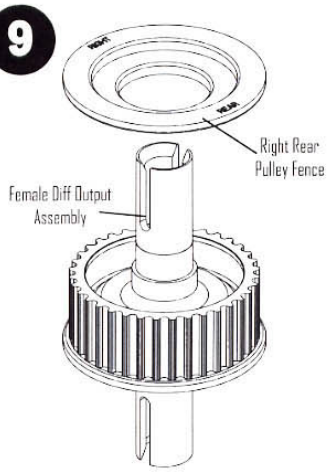

10

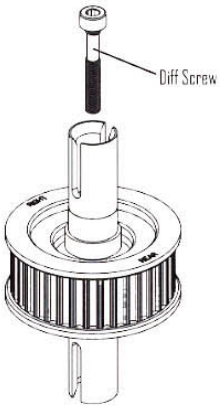

11



12

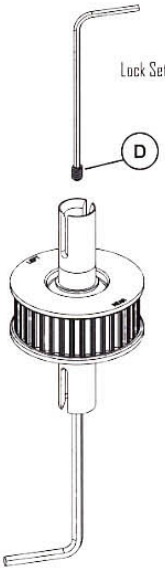

DIFF SETTING
SCREW IN UNTIL TIGHT
(ALL DISC SPRINGS FLAT)
THEN UNDO ¼ TURN.

THEN LOCK THE SETTING
WITH THE GRUB SCREW.

13

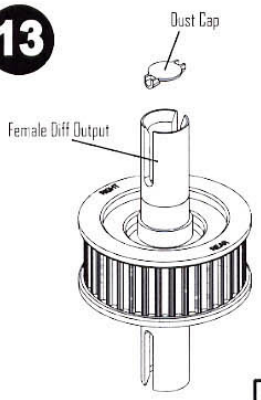

1

Schumacher

NitroFUSION

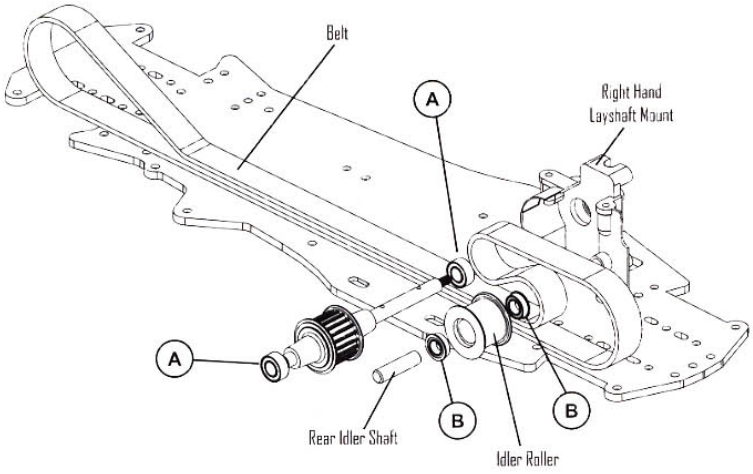

TRANSMISSION
Parts required:

A — 5 x 10 Ball Bearing x 2

B — 5 x 9 Flanged Ball Bearing x 2

2

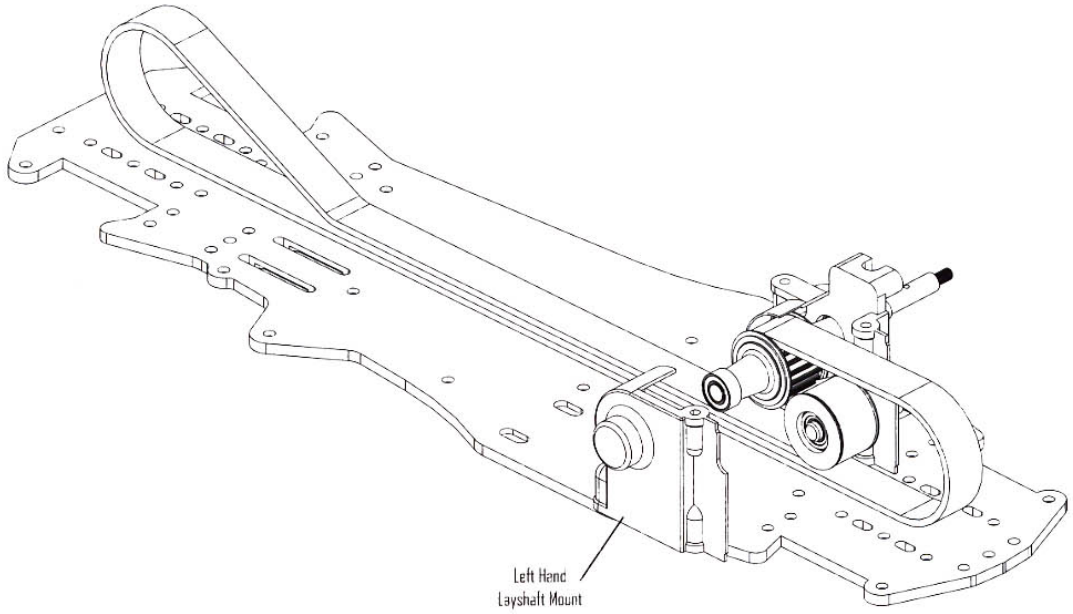

Schumacher

NITRO FUSION

TRANSMISSION
Parts required:

(A) 1.5mm x 9.8mm Pin x 1

(B) No4 x 3/8 Pan x 4

3

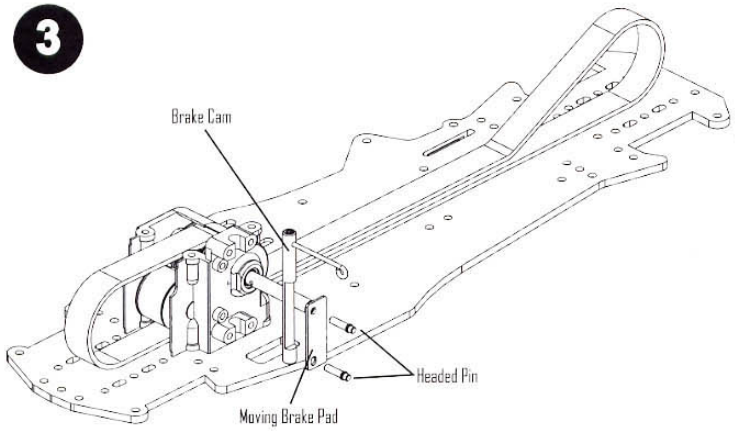

4

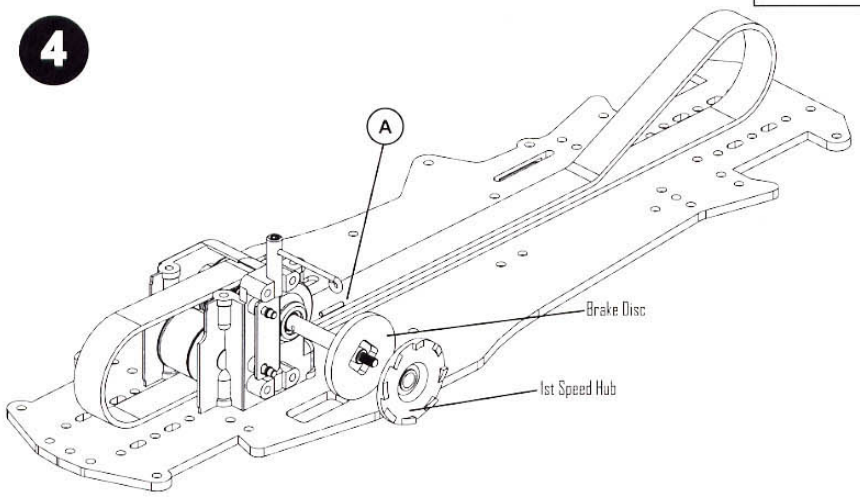

5

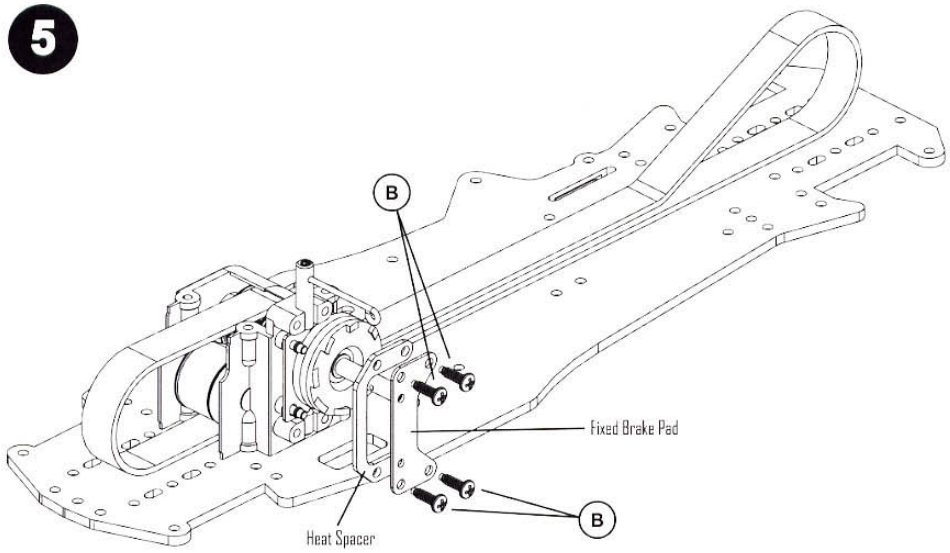

6

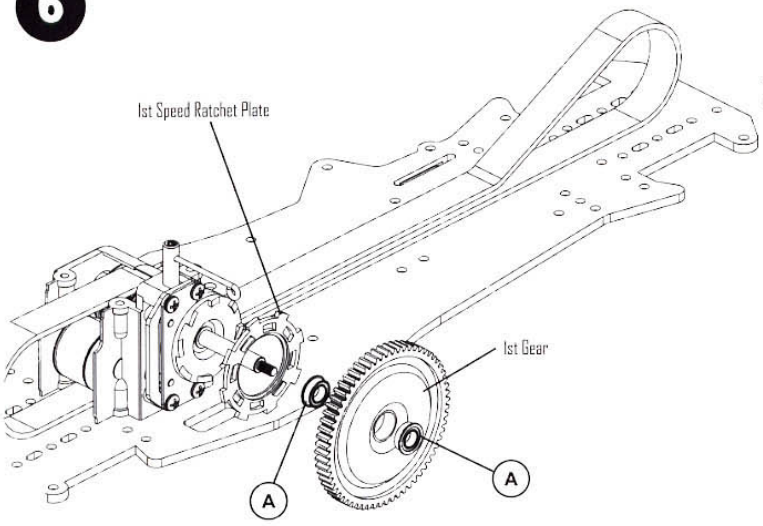

Schumacher

Nitro FUSION

TRANSMISSION
Parts required:

A — 5 x 9 Flanged Ball Bearing x 4

B — Thin Shim x 2

C — 1.5mm x 9.8mm Pin x 1

7

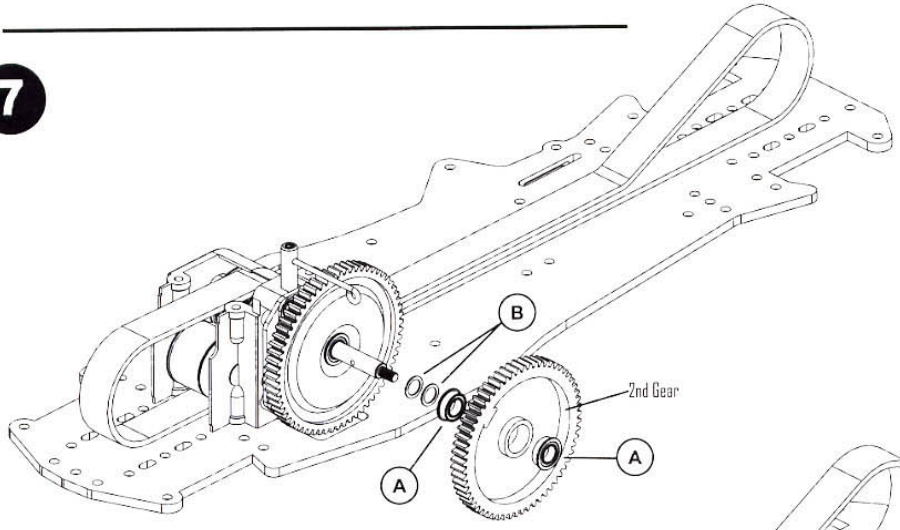

8

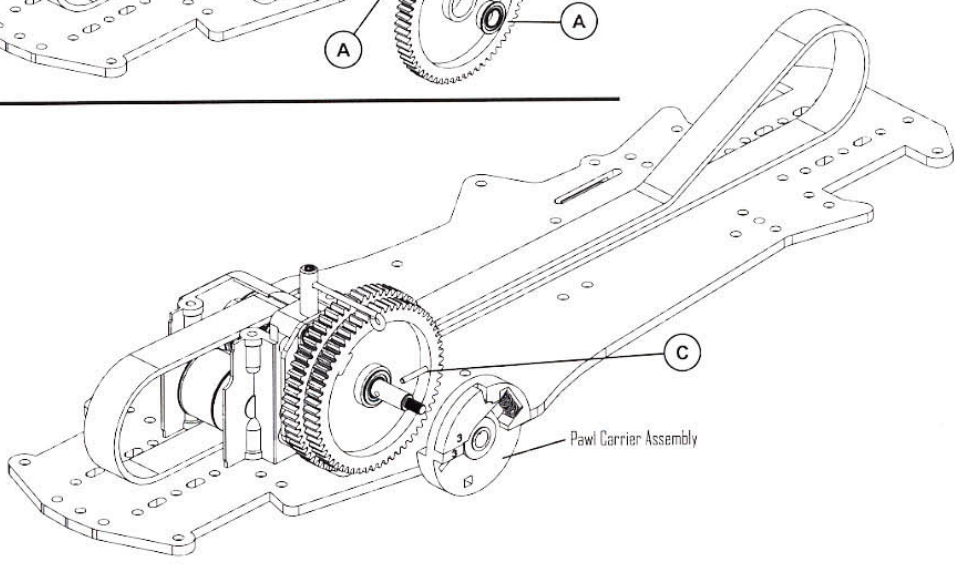

Schumacher

Nitro FUSION

9

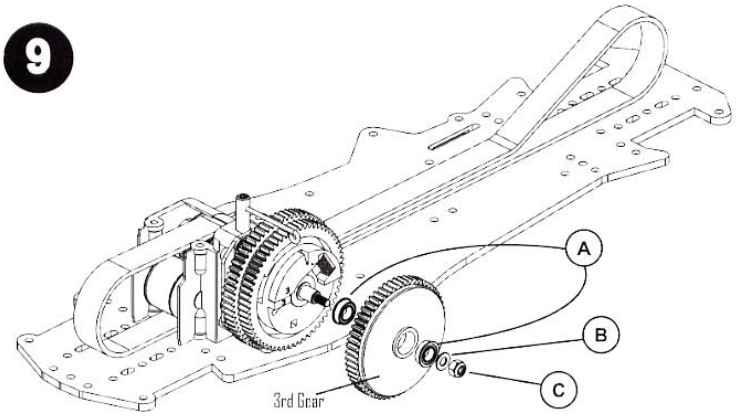

TRANSMISSION
Parts required:

- (A) 5 x 9 Flanged Ball Bearing x 2
- (B) M3 Steel Washer x 1
- (C) M3 Nyloc Nut x 1
- (D) No4 x 1/2 Csk x 4

10

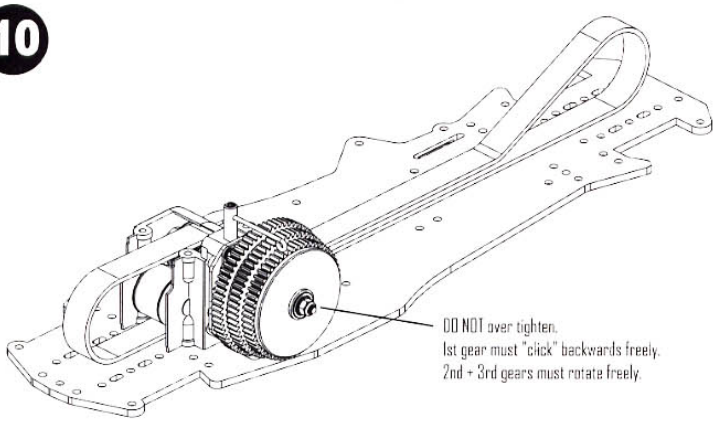

11

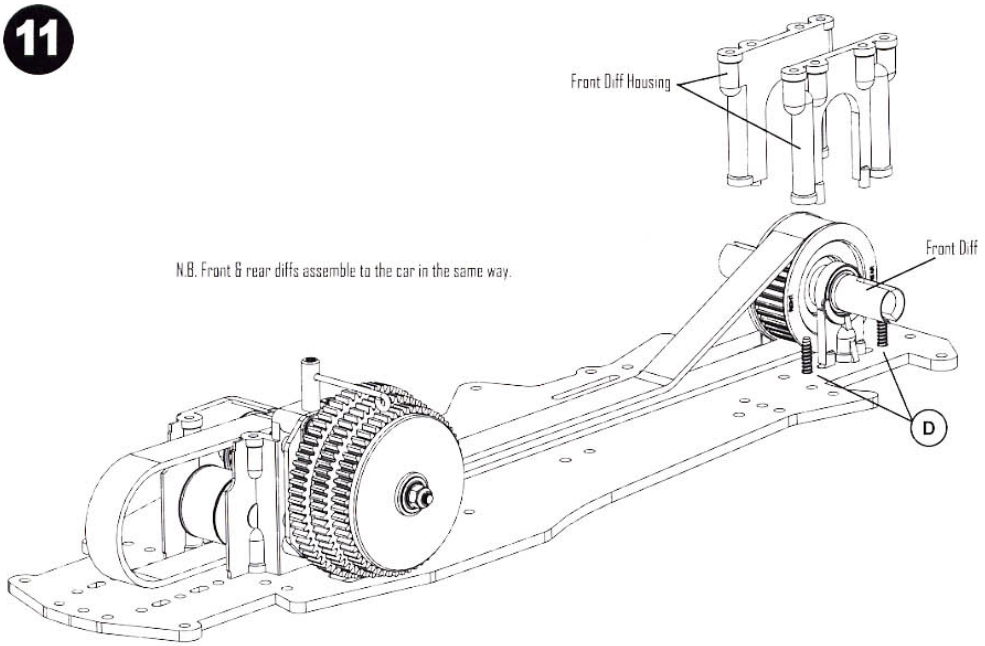

5 Install Servos

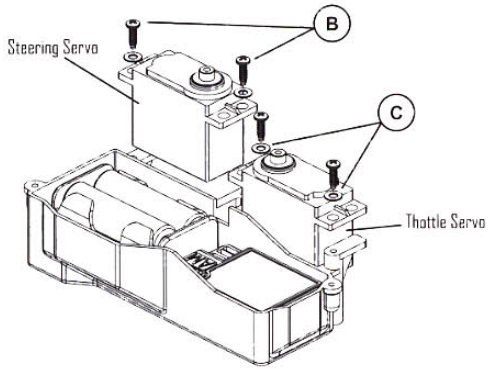

6

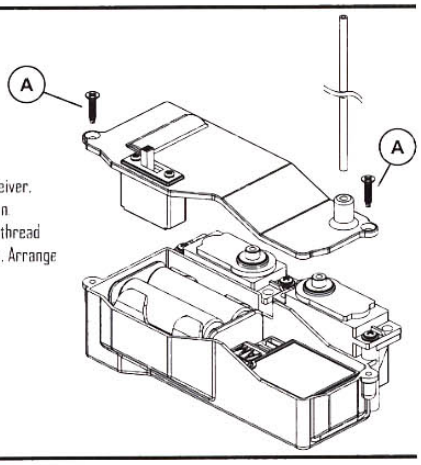

Connect up servos, battery, switch & receiver. Install batteries into transmitter & turn on. Test both servos work. Then switch off & thread aerial wire through the lid & into the tube. Arrange wires into the radio box. Assemble lid.

7

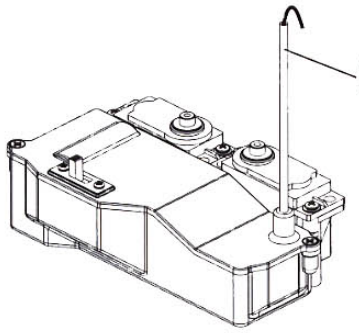

Secure lid to the box. Re-test to ensure the servos work.

8

Re-assemble radio box to car.

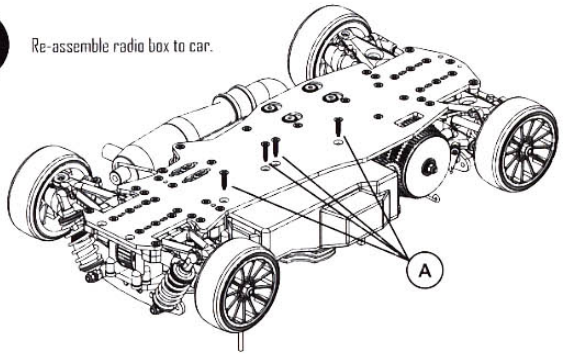

Schumacher

Nitro FUSION

RADIO INSTALLATION Continued

A — No4 1/2 Csk Head x 6

B — No4 3/8 Pan Head x 4

C — M3 Steel Washer x 4

Schumacher

Nitro FUSION

FRONT & REAR WISHBONE MOUNTING

- A — No4 1/2 Csk Head x 2
- B — Ball Stud Short M3 x 8
- C — 5 x 10 Ball Race x 8
- D — THICK shim x 4
- E — THIN shim x 4
- F — Disc Spring x 4
- G — 1.5mm x 11.8mm Pin x 4

1 Front

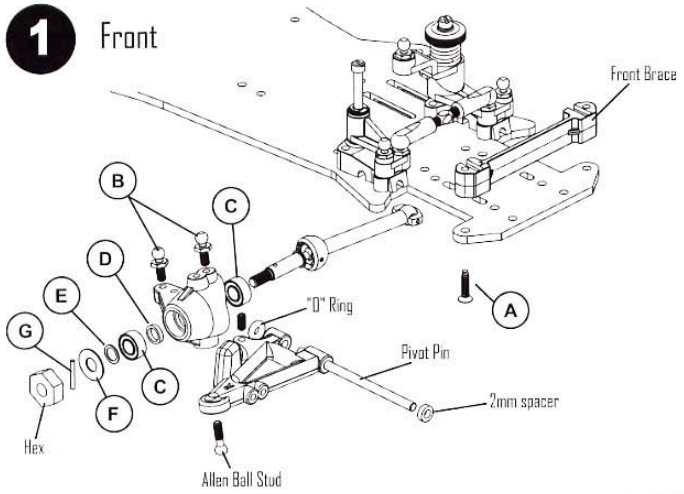

2

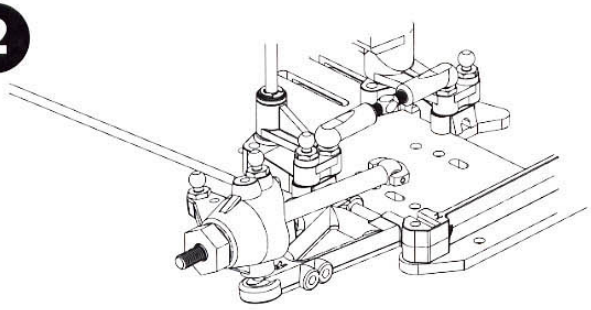

3 Rear

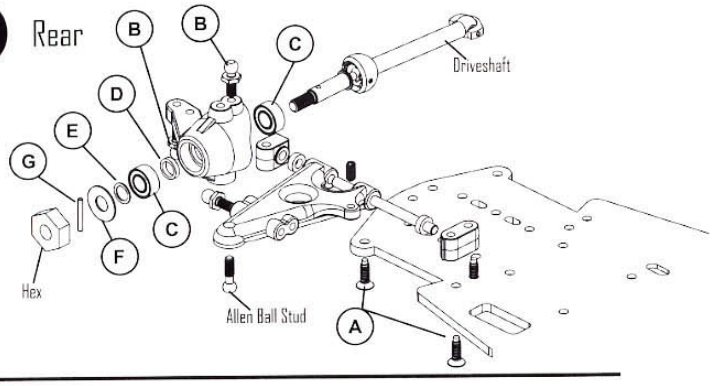

4

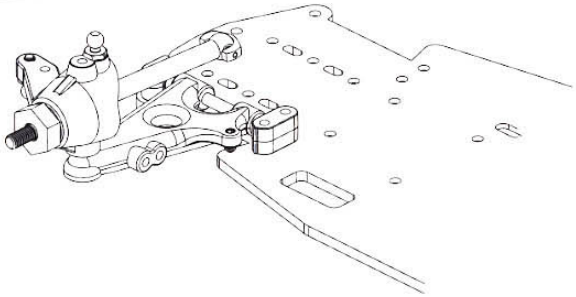

Schumacher

FUSION

Thunder Tiger Pro 21 Engine Parts

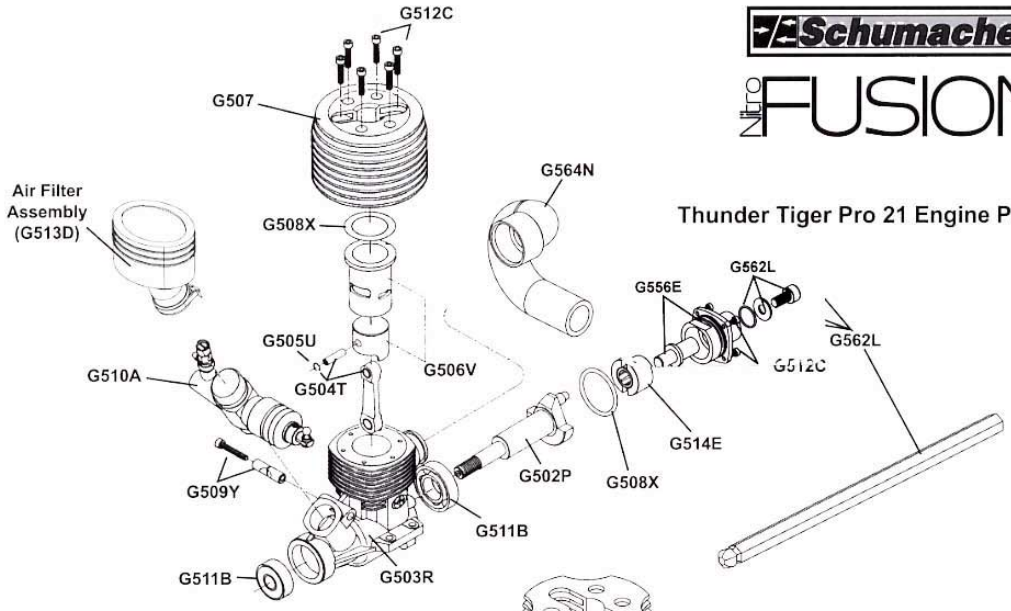

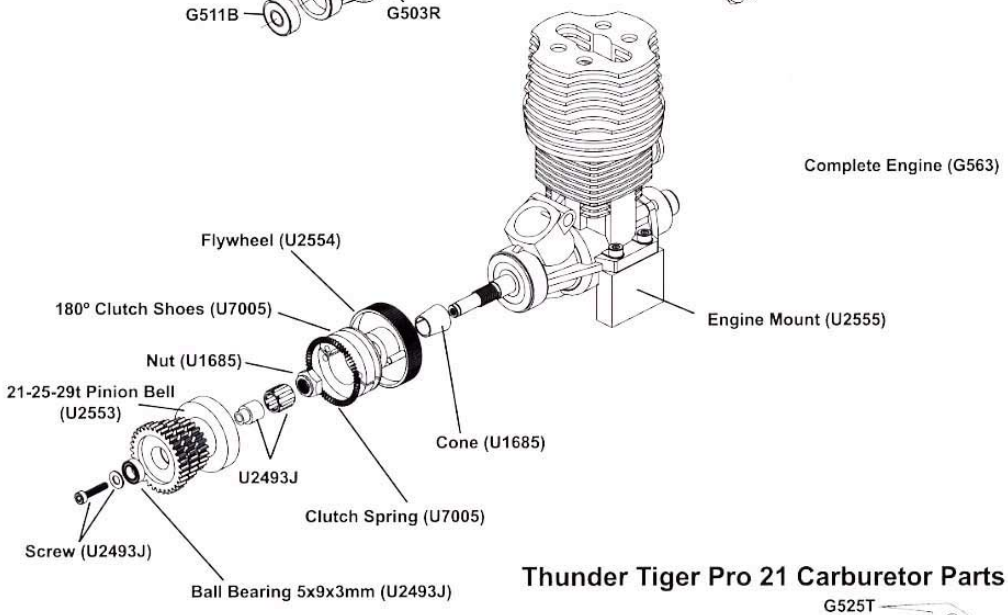

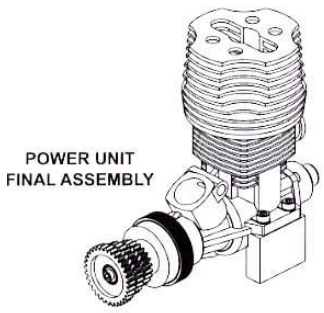

Thunder Tiger Pro 21 Carburetor Parts

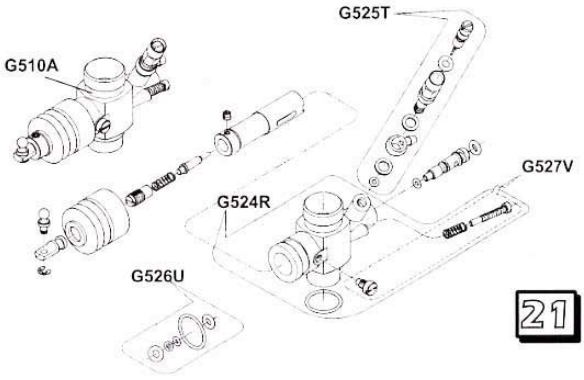

REAR TOE-IN/OUT (Out-board)

The rear toe-in is set by adjusting the turnbuckles at the rear of the car.

Toe-In = A less than B
Toe-Out = A greater than B

2.5° toe-in each side is a good standard setting. This offers a good level of rear grip.

Reducing the rear toe-in offers better steering response and more straight line speed, but less stability

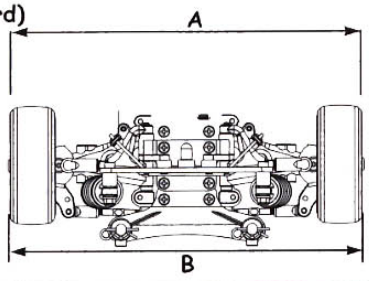

REAR TOE-IN (In-board)

The rear In-Board Toe-In is set by fitting the pivot blocks (see page 5 ❷ & ❸). With the ridge facing in or out.

Facing in = 2° Toe-In
Facing out = 0° Toe-In

0° Toe-In each side is the standard setting.
2° Toe-In each side offers better rear end grip, but less steering response.

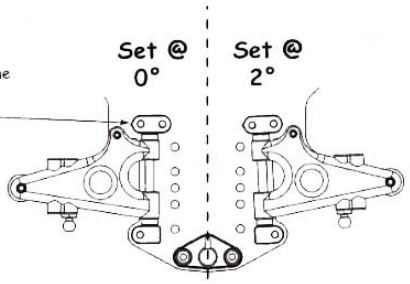

ANTI SQUAT & SUSPENSION DROOP

The car has 0° anti squat as standard. More anti squat will give more on power traction, but less off power traction, however too much will make the car unstable when turning into high speed corners. With 0° anti squat the steering will be precise & positive. On slippery tracks add anti squat.

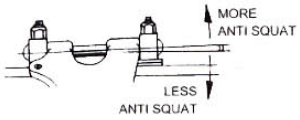

The suspension droop can be adjusted using the grub screw in the lower wishbones. Less droop improves steering response. More droop increases rear grip.

RIDE HEIGHT

In general always run the car as low as possible, without the chassis grounding out, as it rolls into corners.

Run the front 0.5mm to 1.0mm lower than the rear, to give more steering.

A good starting point is 5.5mm at the front and 6.0mm at the rear.

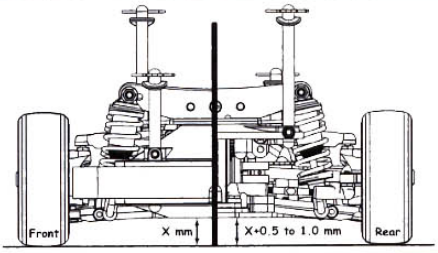

WHEELBASE (set on REAR wishbones)

The length of the wheelbase is set by fitting the spacers "G" (see page 5 ❷). In different positions.

In front of the wishbone = Long. Either side of the wishbone = Medium. Behind the wishbone = Short

Use spacers to maintain the wheelbase length after adjusting the Castor or Toe-In/Out.
In general a longer wheelbase will offer more steering.

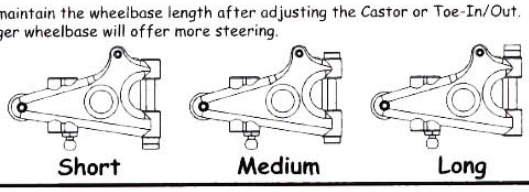

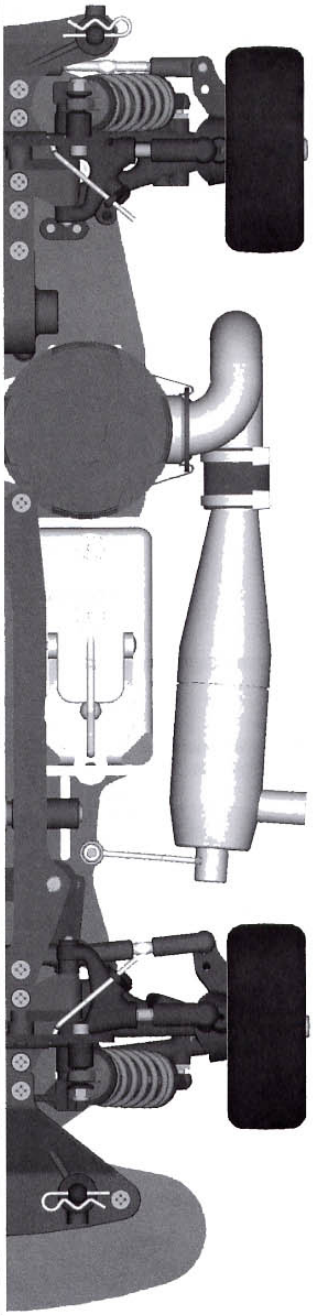

Schumacher

Nitro FUSION

TRACK SETTINGS

FRONT TOE-IN (Out-board)

The front toe-in is set by adjusting the steering trackrod turnbuckles.

Toe-In = A less than B
Toe-Out = A greater than B

Toe-in will give a more stable car, but will give less sharp turn in. We recommend to start at about 1° each side. Maximum 2° each side.

Toe-out will give the opposite, less stability with sharper turn in to the corners.

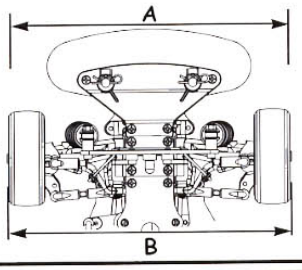

FRONT TOE-OUT (In-board)

The front In -board toe-out is set by fitting the front strap (see page 9❷) with the 2° mark up or down.

2° mark showing (up) = 0°.
2° not showing (down) = 2° toe-out.

With the In-board position set to 2° the steering will be smooth and progressive, when set to 0° the steering is more aggressive.

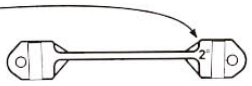

SPRINGS

The spring rate controls the suspension stiffness.
Fit spring spacers only to change the ride height. They DO NOT alter the suspension stiffness. On slippery or bumpy tracks use soft to medium rate springs, on flat or high grip tracks run medium to hard rate springs.

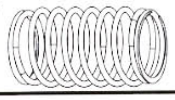

FRONT CASTOR

The front castor can be altered by moving the two washers on the top wishbone pivot pin. Less castor will give a quicker steering response, but could lead to power on understeer. More castor will give the opposite, slightly slower turn in, but more power on steering.

11° = 2 washers at rear.

8.5° = 1 washer each side.

6° = 2 washers at front.

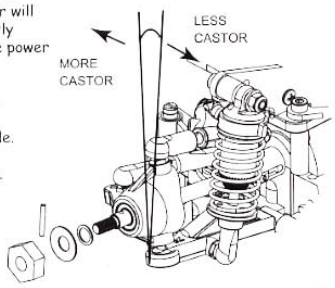

LOWER SHOCK POSITION

Inner (standard) position is best for most tracks & conditions. The outer position is good on VERY high grip tracks.

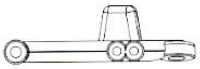

SHOCK BRACKETS

Vertical shock absorbers make the car react sharply to driver inputs. A laydown shock offers a softer feel to the driver.

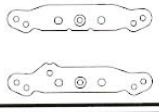

HUB CARRIER

Position 1 offers an aggressive initial steering response. Position 2 (standard) offers a softer initial steering response.

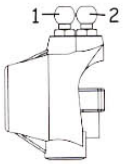

Use hole 1 for a faster, more aggressive steering response and more lock. Use hole 2 for smoother more proprtional steering. Hole 2 is generally better on high grip tracks.



UPPER SUSPENSION MOUNT

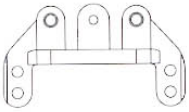

The upper (standard) hole makes the car smooth and predictable. The lower hole can offer better grip, but with a much less predictable breakaway.

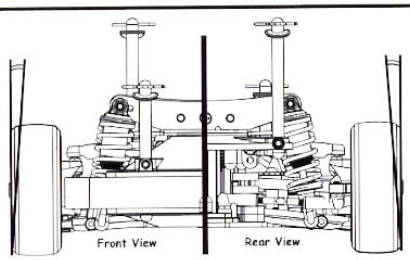

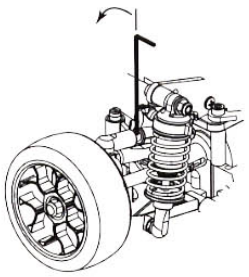

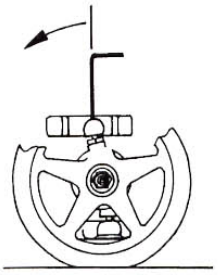

FRONT & REAR CAMBER

Car as standard will have 4° negative camber (the top of the wheels lean inward). Set the camber to 1° negative by adjusting the top wishbone turnbuckle. To reduce camber look at wheel face on & turn allen key anti-clockwise as shown above - This is the same for all four wheels. With maximum camber (4°) the car will have high levels of grip, but there may be the possibility of sudden breakaway in corners. Reducing the camber gives a more progressive slide, but may give less grip. See set up sheet.

Schumacher

NITRO FUSION

STEERING LINK
Parts required:

A — M3 Nyloc Nut x 1

B — Ball Stud Short M3 x 1

1

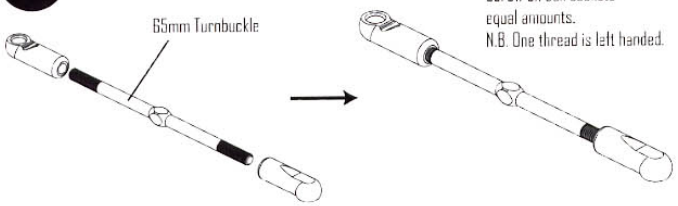

2

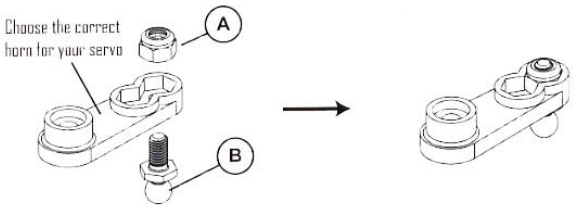

3

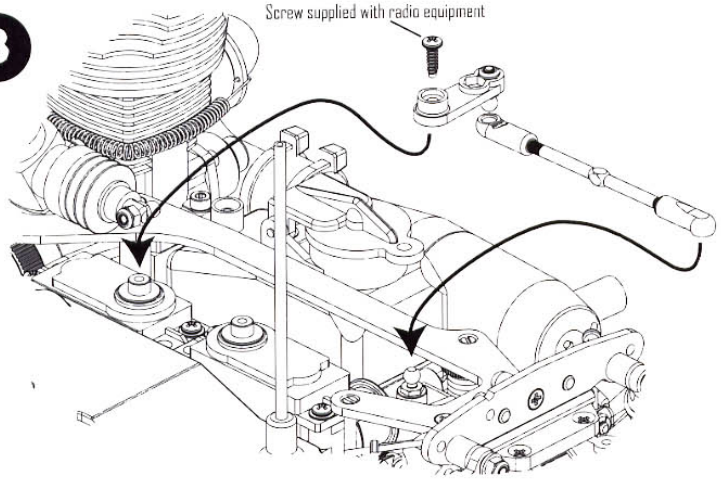

4

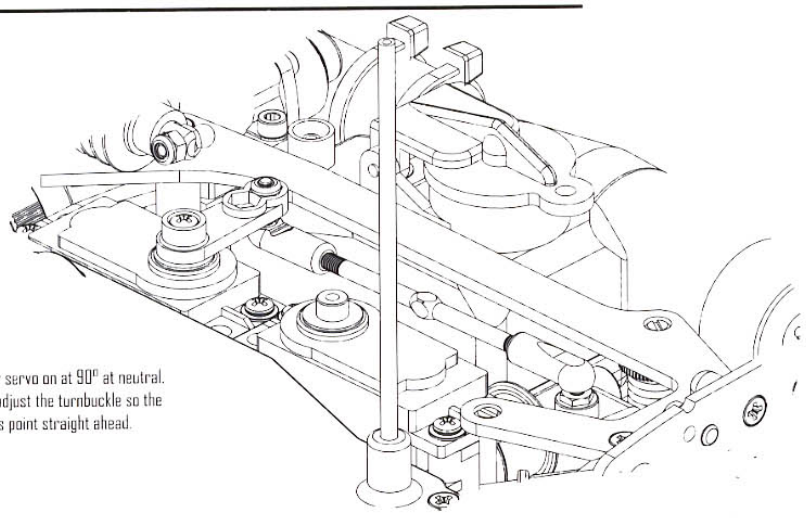

Screw servo on at 90° at neutral.
Then adjust the turnbuckle so the
wheels point straight ahead.

Schumacher

Nitro FUSION

THROTTLE LINK

Parts required:

A — Ball Socket x 1

B — No2 3/8 Pan Head x 1

C — Collar & grub screw x 2

1

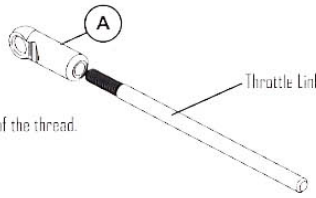

Screw on up to the end of the thread.

2

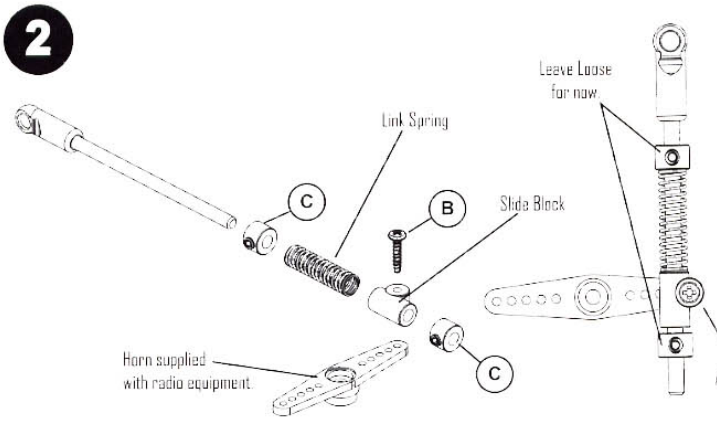

Adjust so the slide block rotates freely.

3

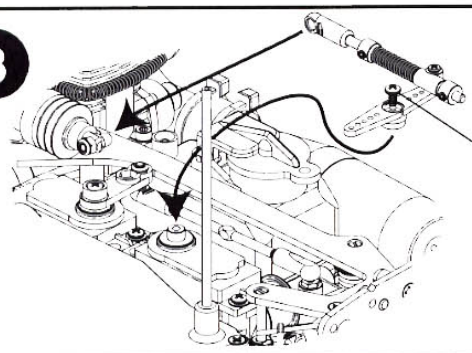

Screw supplied with radio.

Screw horn at 90° at neutral.
Snap socket onto carb ball.

4

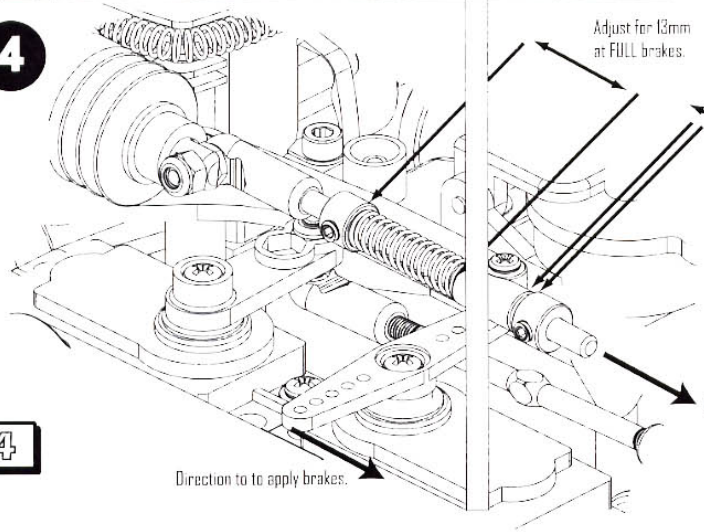

4

Schumacher

Nitro FUSION

BRAKE LINK

Parts required:

A — Collar & grub screw x 2

1

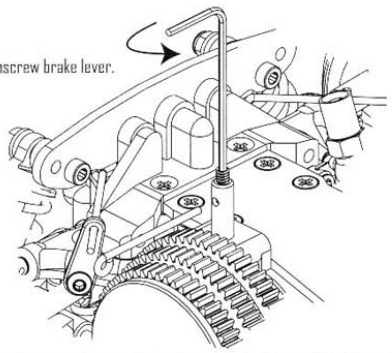

2 Assemble Brake Link.

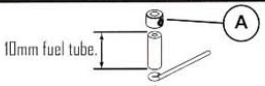

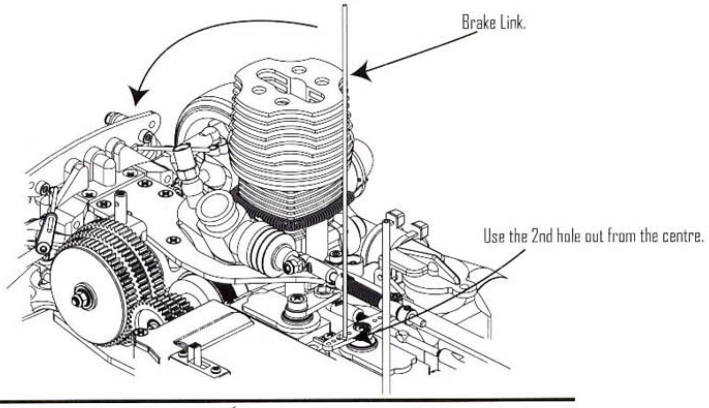

3

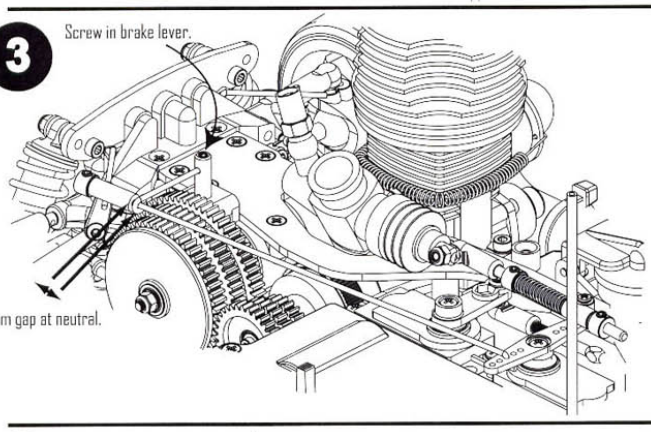

4

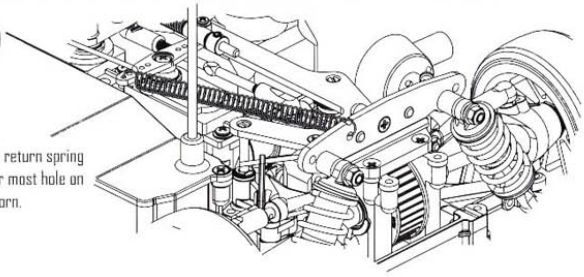

Schumacher

NitroFUSION

AIR FILTER & FUEL PIPE INSTALLATION

1

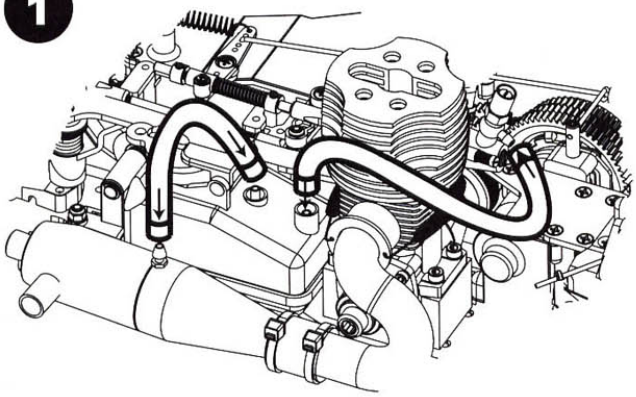

2 Assemble Air Filter.

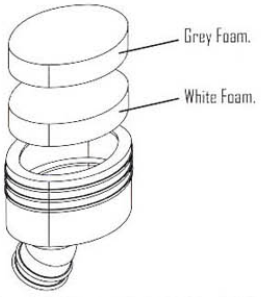

3

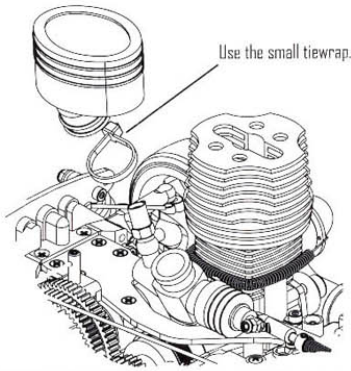

4

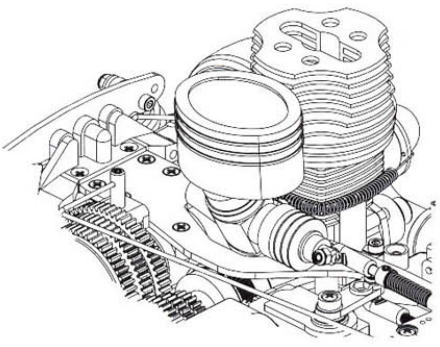

Schumacher

Nitro FUSION

FRONT BUMPER
Parts required:

- (A) No4 5/8 Csk Head x 2
- (B) No4 1/2 Csk Head x 4
- (C) "R" Clip x 2
- (D) M4 x 6mm Grub Screw x 2

1

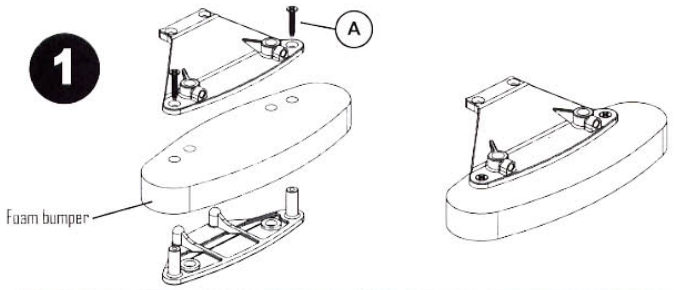

2

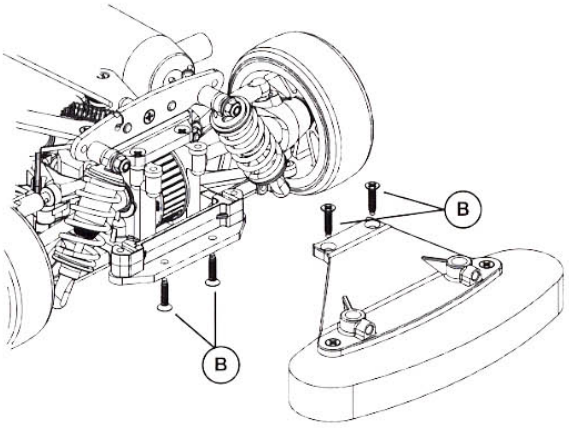

3

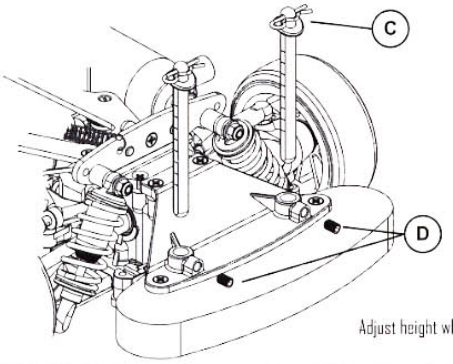

Adjust height when fitting body.

4

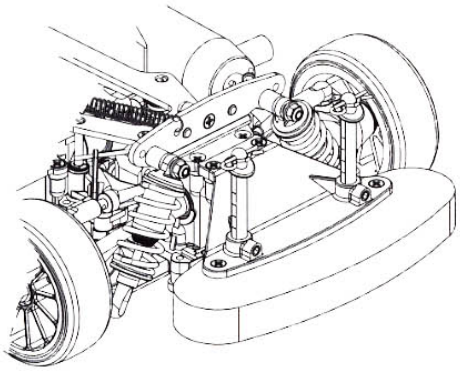

Schumacher

Nitro FUSION

REAR BODY MOUNT
Parts required:

(A) No4 1/2 Csk Head x 2

(B) M4 x 6mm Grub Screw x 2

(C) "R" Clip x 2

1

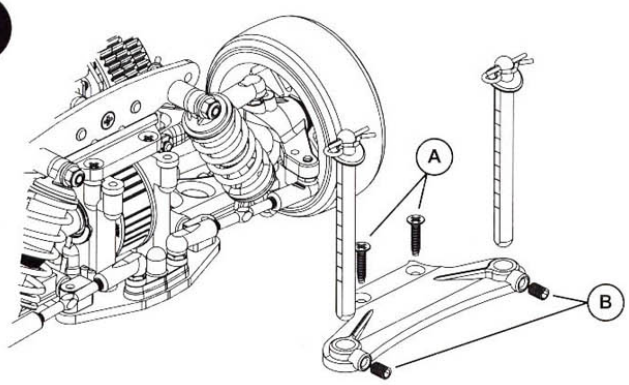

2

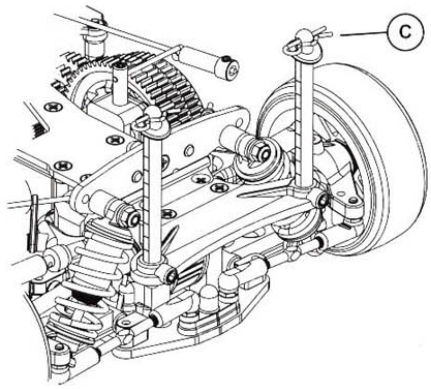

Carefully cut away the shaded areas. Then, using a file or some abrasive paper, smooth the cut edges. Any ragged edges or score lines may cause the bodyshell to crack or split when in use. The body shape of your car may differ slightly from the one pictured.
If you have the pick-up truck style, cut both the rear window & flat bed, so that the engine head is clear of the bodyshell.

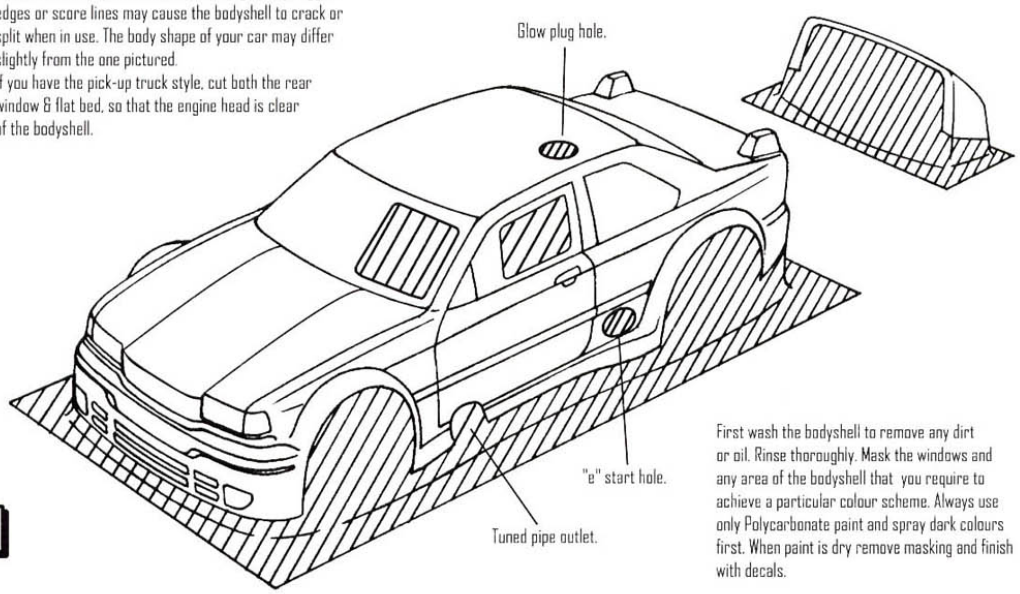

First wash the bodyshell to remove any dirt or oil. Rinse thoroughly. Mask the windows and any area of the bodyshell that you require to achieve a particular colour scheme. Always use only Polycarbonate paint and spray dark colours first. When paint is dry remove masking and finish with decals.

Schumacher

Nitro FUSION

STARTING THE ENGINE

1 SET UP DRILL

After charging your drill, insert the "e-start" adaptor (ball end out) and tighten the chuck.
ENSURE THE DRILL ROTATES CLOCKWISE.

Set the torque setting to the lowest possible setting, that will turn the engine over.

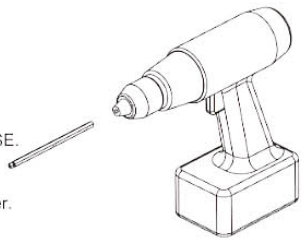

2 FILL FUEL TANK

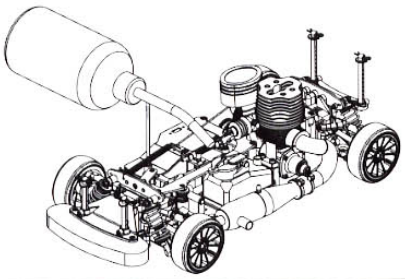

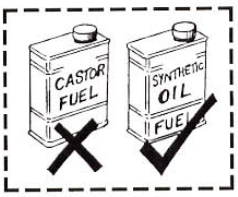

WE STRONGLY RECOMMEND DYNA-GLOW 10/16 OR BLUE THUNDER 10/16 FUEL

3 PRIMING ENGINE

TURN ON TRANSMITTER.
SWITCH ON RECEIVER.

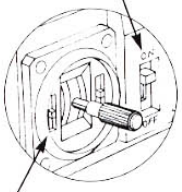

ENSURE THROTTLE TRIM IS AT NEUTRAL

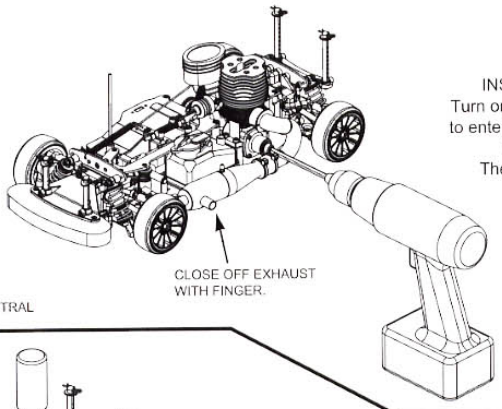

CLOSE OFF EXHAUST WITH FINGER.

INSERT INTO "e" START
Turn on drill and watch for the fuel to enter the carb. Then keep going for 3 seconds more.
The engine is now primed.

4 STARTING ENGINE

HOLD GLOW START ONTO PLUG

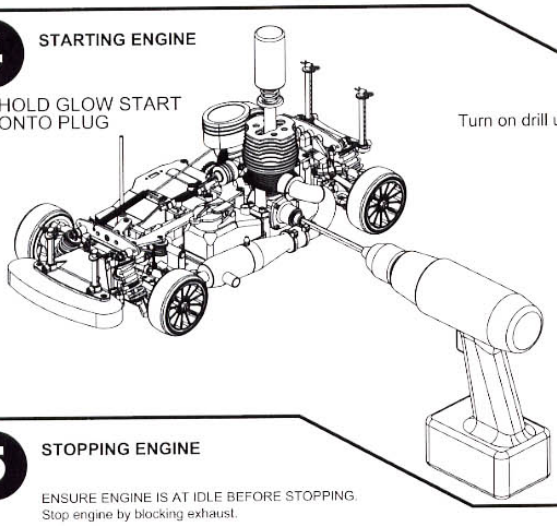

Turn on drill until the engines starts!

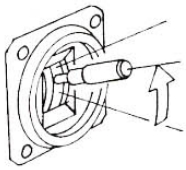

Pull out drill and gently rev the engine, then remove the glow clip.

5 STOPPING ENGINE

ENSURE ENGINE IS AT IDLE BEFORE STOPPING.
Stop engine by blocking exhaust.

WARNING: ENGINE AND TUNE PIPE WILL BE VERY HOT DO NOT TOUCH FOR SEVERAL MINUTES

U2462



Purple Alloy Diff Mounts (pr).
CNC Machined, offers accurate diff location. And added strength.

U2163



Purple Alloy Hub Carriers.
CNC Machined, to offer more strength and precise bearing fit.

U1921

Spring Tuning Set (5 pairs).
Set up your MISSION to suit the track conditions with this set of colour coded springs.



U2251

Kwik Klips (Pk8)
Replaces the 2mm spacers for fast castor adjustment. (Includes 1mm & 2mm)



U2297



Threaded Shock Bodies (Pk4).
Purple Alloy shock bodies and collars that offer ultra fine ride-height adjustment.

U1818



Alloy Shock Seal Housings (pr).
Purple CNC housing. Offers strength and a super smooth operation.

U2135

Purple Alloy M4 Nyloc Wheel Nuts.
Lightweight flanged wheel nuts in funky purple!



U2151

Steel Driveshafts (pr).
Metal U.J.s that are stronger, but still feature Schumachers revolutionary blade drive system.



U1954



Thrust Bearing - Tungsten Carbide.
Super smooth, long life, low friction. The ultimate in thrust race bearings.

U2459



Tungsten Carbide Diff Balls.
Super strong 2.5mm balls with excellent life and smoothness.

U2567

24-28-32t Pinion Bell.

HIGH SPEED gearing 80mph plus!. Ideal for long straights.

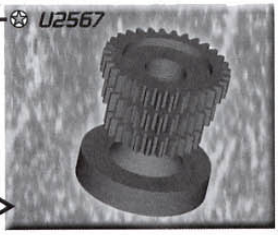

U2491

15-19-23t Pinion Bell.
HIGH ACCELERATION gearing 55mph plus!. Ideal for smaller circuits.

