FUSION 28

4WD 1/10th Scale R/C Nitro Car

Instruction Manual v 1.0



Schumacher Racing
71-73 Tenter Road
Moulton Park
Northampton
NN3 6AX
UNITED KINGDOM

www.racing-cars.com

Schumacher USA Inc
6302 Benjamin Road
Suite 404
Tampa
Florida 33634
U.S.A

S1149

Schumacher

FUSION 28

4WD 1/10th Scale R/C Nitro Car

ADDITIONAL ITEMS REQUIRED

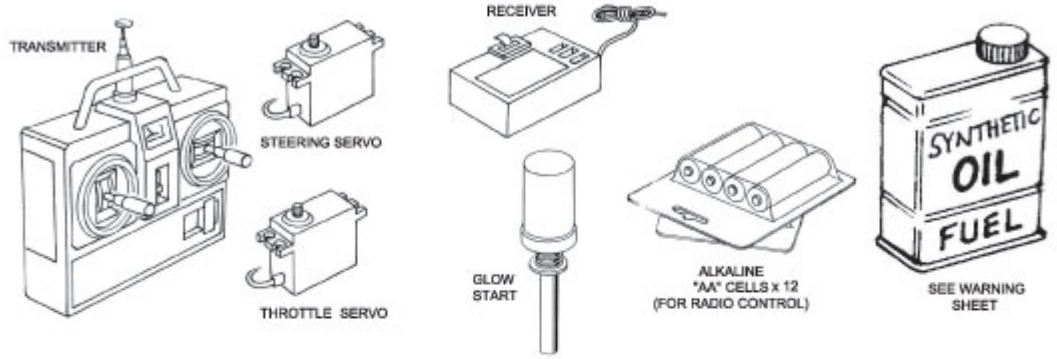

FOR BEST PERFORMANCE, IT IS VERY IMPORTANT THAT GREAT CARE IS TAKEN TO ENSURE THE FREE MOVEMENT OF ALL PARTS.

Do not use excessive force when tightening the self-tapping screws, or you may strip the thread in the plastic. It is recommended to stop tightening it when the threaded part on the screw goes into the plastic part and you feel some resistance from the tightening. Screws can be made easier to tighten if a drop of oil is used.

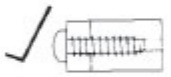

Good

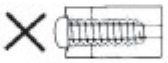

Over tighten and may strip the thread in the plastic

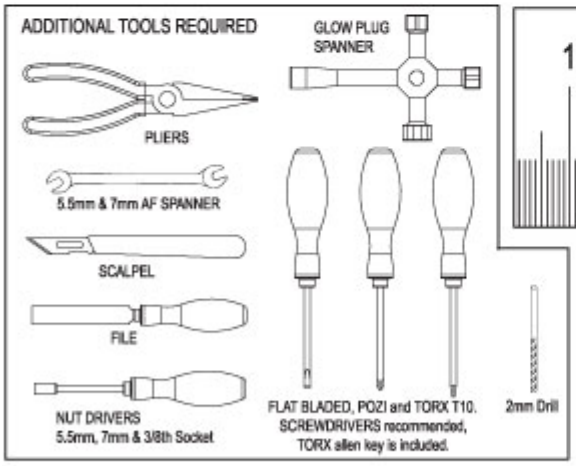

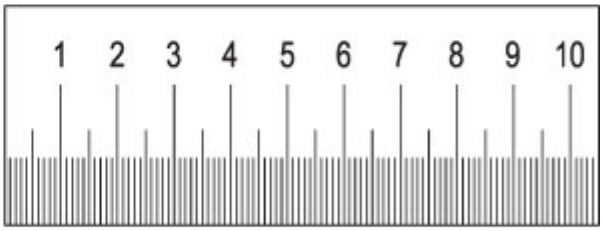

In line with our policy of continous development the exact specification of the kit may vary.
In the unlikely event of any problems with your kit please contact the model shop where you purchased it.

GUARANTEE

All parts are guaranteed against defect in manufacture. Conditions of use of this product are out of our control and therefore we cannot guarantee parts against failure in use. This is an ultra high performance car, if used without due respect failure could occur.
If you have any problems with this product your first point of contact should be the store where you purchased it from.

In line with our policy of continuous development the exact details of the kit may vary.

Schumacher

FUSION 28
4WD 1/10th Scale R/C Nitro Car

RADIO INSTALLATION
Parts required:

(A) M3 x 12 Csk TORX

(B) M3 x 10 Csk TORX

1

Remove Radio Box

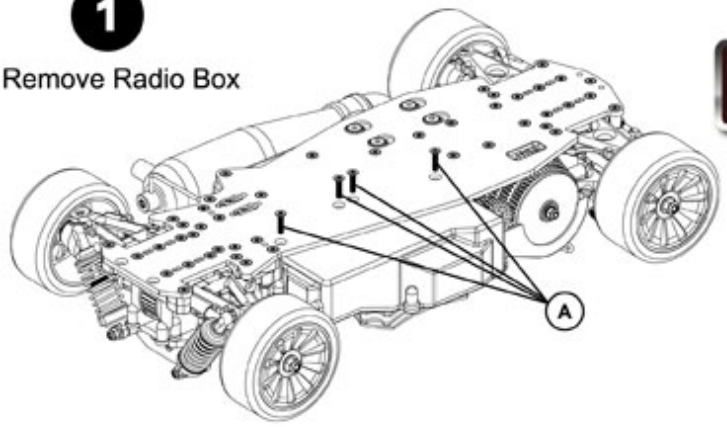

2

Remove Lid

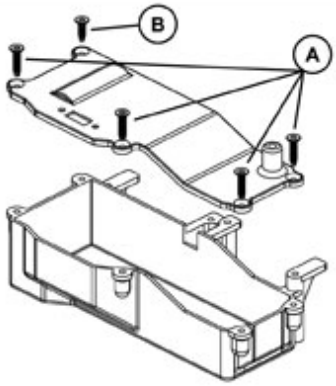

3

Assemble Radio Switch

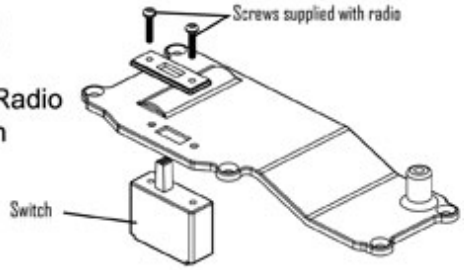

4

Install Battery Pack and Receiver

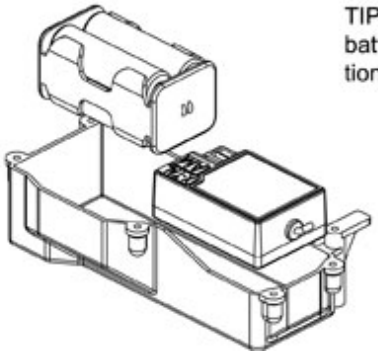

TIP - Use an elastic band arround the batteries for extra security of the connections.

ENGINE SETTINGS

Schumacher

FUSION 28
4WD 1/10th Scale R/C Nitro Car



ENGINE STALLS = SCREW THROTTLE STOP SCREW CLOCKWISE TO INCREASE REVS



CAR DOES NOT MOVE AND SOME SMOKE = OK



CAR EDGES FORWARD = SCREW THROTTLE STOP SCREW ANTI-CLOCKWISE TO LOWER REVS

IDLE SPEED SETTING



SET IDLE SPEED AS HIGH AS POSSIBLE WITHOUT THE CAR EDGING FORWARD



TOO MUCH SMOKE AND SLOW ACCELERATION (TOO RICH)
SCREW LOW SPEED MIXTURE SCREW CLOCKWISE



SOME SMOKE AND GOOD ACCELERATION = OK



CAR EDGES FORWARD THEN STALLS
(TOO LEAN) SCREW LOW SPEED MIXTURE SCREW ANTI-CLOCKWISE

LOW SPEED MIXTURE SETTING

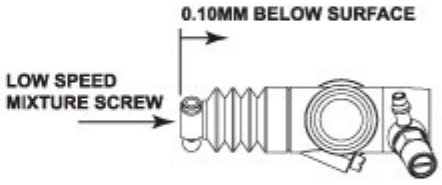



TOO MUCH SMOKE AND SLOW SPEED (TOO RICH)
SCREW HIGH SPEED MIXTURE SCREW CLOCKWISE



SOME SMOKE AND GOOD SPEED = OK



TOO LITTLE SMOKE AND SLOW SPEED (TOO LEAN)
SCREW HIGH SPEED MIXTURE SCREW ANTI-CLOCKWISE

HIGH SPEED MIXTURE SETTING



HIGH SPEED MIXTURE SCREW
4 TURNS OPEN (ANTI-CLOCKWISE) FROM FULLY CLOSED

IF THE CAR BEGINS TO LOSE PERFORMANCE AFTER A FEW MINUTES IT IS PROBABLY OVERHEATING (TOO LEAN). YOU MUST STOP AND UNSCREW THE HIGH SPEED MIXTURE SCREW 1/4 TURN ANTI-CLOCKWISE

SETTINGS GIVEN ARE FOR A STARTING POINT ONLY SMALL ADJUSTMENTS MAY BE REQUIRED DEPENDING ON THE CONDITIONS

DO NOT ALLOW THE NOISE TO ANNOY OTHERS
DO NOT OPERATE THE "CAR" ON THE PUBLIC HIGHWAY
DO NOT OPERATE THE "CAR" IN A CONFINED SPACE OR CROWDED AREA
DO NOT RUN ENGINE WITHOUT AIR FILTER - SERIOUS DAMAGE WILL RESULT
DO NOT ALLOW THE TRANSMITTER OR RECEIVER BATTERIES TO RUN FLAT

Schumacher

FUSION 28
4WD 1/10th Scale R/C Nitro Car

TROUBLE SHOOTING

RUNNING ENGINE IN FROM NEW

To ensure your engine has a long life it needs to be "run in" before being "raced".
Run the car for 2 or 3 tank fulls, at a rich
Carb setting on half throttle, do not use full throttle

AFTER RUNNING IN

After "running in" is complete, and you have re-tuned the high and low end mixture screws for maximum power, you may need to reset the idle speed to prevent the car from "creeping" forward at neutral. This must be done with the IDLE SPEED SCREW on the carburettor NOT with the throttle trim on the radio, which will only apply the brakes. Applying the brakes will leave the clutch dragging and lead to over-heating.

SEE PAGE 10 FOR HOW TO SET YOUR IDLE SPEED.

The following information will help solve any problems when running and maintaining your car

PROBLEM	CAUSE	REMEDY
ENGINE DOES NOT START	FUEL TANK EMPTY, ENGINE NOT PRIMED	FILL TANK AND REPRIME ENGINE
	FLAT GLOW BATTERY OR DEAD GLOW PLUG	RECHARGE BATTERY AND/OR REPLACE PLUG
	CLOGGED AIR FILTER	CLEAN OR REPLACE AIR FILTER
	OVER PRIMED, CYLINDER FLOODED WITH FUEL	REMOVE GLOW PLUG THEN TURN ENGINE OVER TO DISCHARGE FUEL
	INCORRECT CARBURETTOR ADJUSTMENT	CHECK SETTINGS
	INCORRECT LINKAGE ADJUSTMENT	RE ADJUST LINKS WITH SERVO IN NEUTRAL SEE MANUAL
	WORN ENGINE - PISTON LINER	REPLACE PISTON LINER
ENGINE STALLS	FUEL TANK EMPTY	FILL FUEL TANK
	CLOGGED AIR FILTER	CLEAN OR REPLACE AIR FILTER
	INCORRECT CARBURETTOR ADJUSTMENT	RE ADJUST CARBURETTOR SETTINGS
	ENGINE OVER HEATING	ALLOW ENGINE TO COOL DOWN AND OPEN HIGH SPEED MIXTURE SCREW 90°
POOR ENGINE RESPONSE	INCORRECT CARBURETTOR ADJUSTMENTS	RE ADJUST CARBURETTOR SETTINGS
	FUEL TANK PRESSURE PIPE LOOSE, DETACHED OR DAMAGED OR BLOCKED	REPLACE OR REFIT PRESSURE PIPE
	WORN ENGINE - PISTON LINER	REPLACE PISTON LINER
POOR CAR CONTROL	WEAK BATTERIES IN TRANSMITTER	RECHARGE OR REPLACE BATTERIES
	WEAK RECEIVER BATTERIES	RECHARGE OR REPLACE BATTERIES
	TRANSMITTER AERIAL NOT FULLY EXTENDED	EXTEND AERIAL
	POOR ADJUSTMENT OF LINKS	RE-ADJUST LINK TO INSTRUCTIONS

IMPORTANT - REGULAR MAINTENANCE

Check differential adjustment, check all screws are tight, check gear mesh Adjustment. Oil bearings and keep car clean.

Schumacher

FUSION 28

4WD 1/10th Scale R/C Nitro Car

SHOCK ASSEMBLY
Parts required:

- (A) "E" clip
- (B) Seal Housing
- (C) Spacer
- (D) Bobbin

1

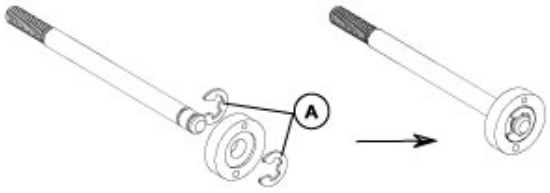

shaft assembly

2

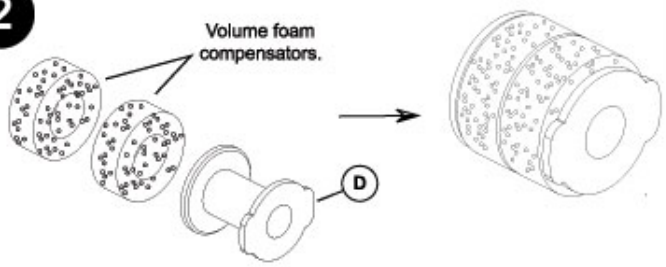

Bobbin assembly

3

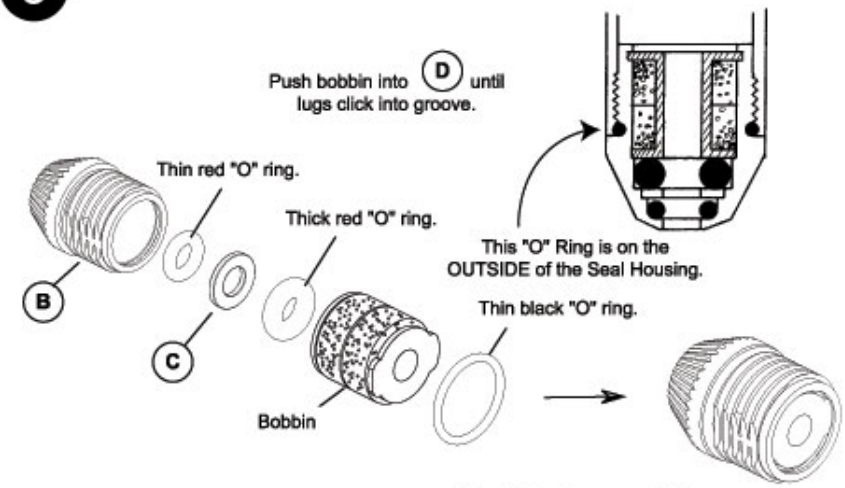

Seal Pack assembly

5

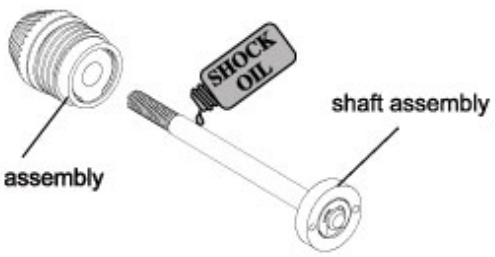

Schumacher

FUSION 28
4WD 1/10th Scale R/C Nitro Car

SHOCK ASSEMBLY
Parts required:



Ball Socket

6

Fill shock body with oil to the bottom of the thread.

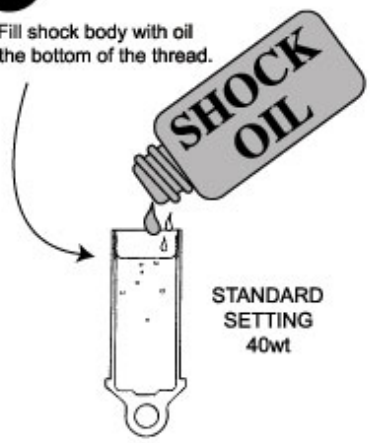

STANDARD SETTING 40wt

7

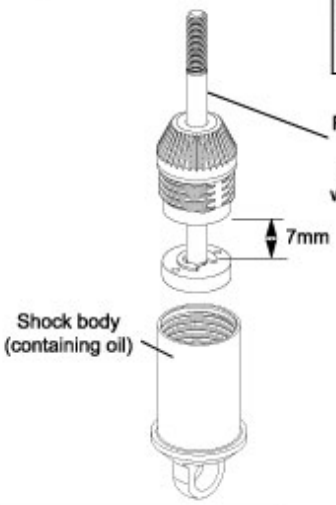

Position assembly as shown and carefully screw into the shock body. (some oil will spill from the body, clean with tissue)

8

Note: When housing is assembled correctly there is no black "O" ring showing.

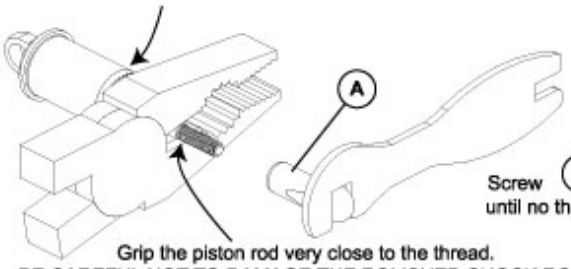

Screw (A) on to shaft until no thread is showing

Grip the piston rod very close to the thread.
BE CAREFUL NOT TO DAMAGE THE POLISHED SHOCK ROD.

9

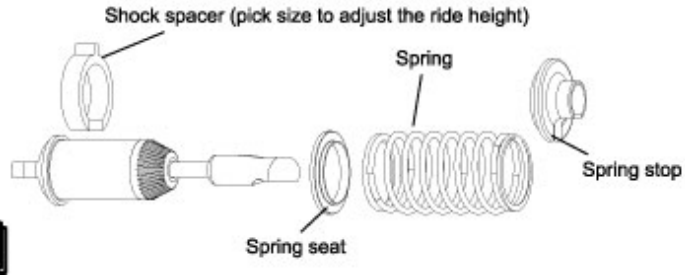

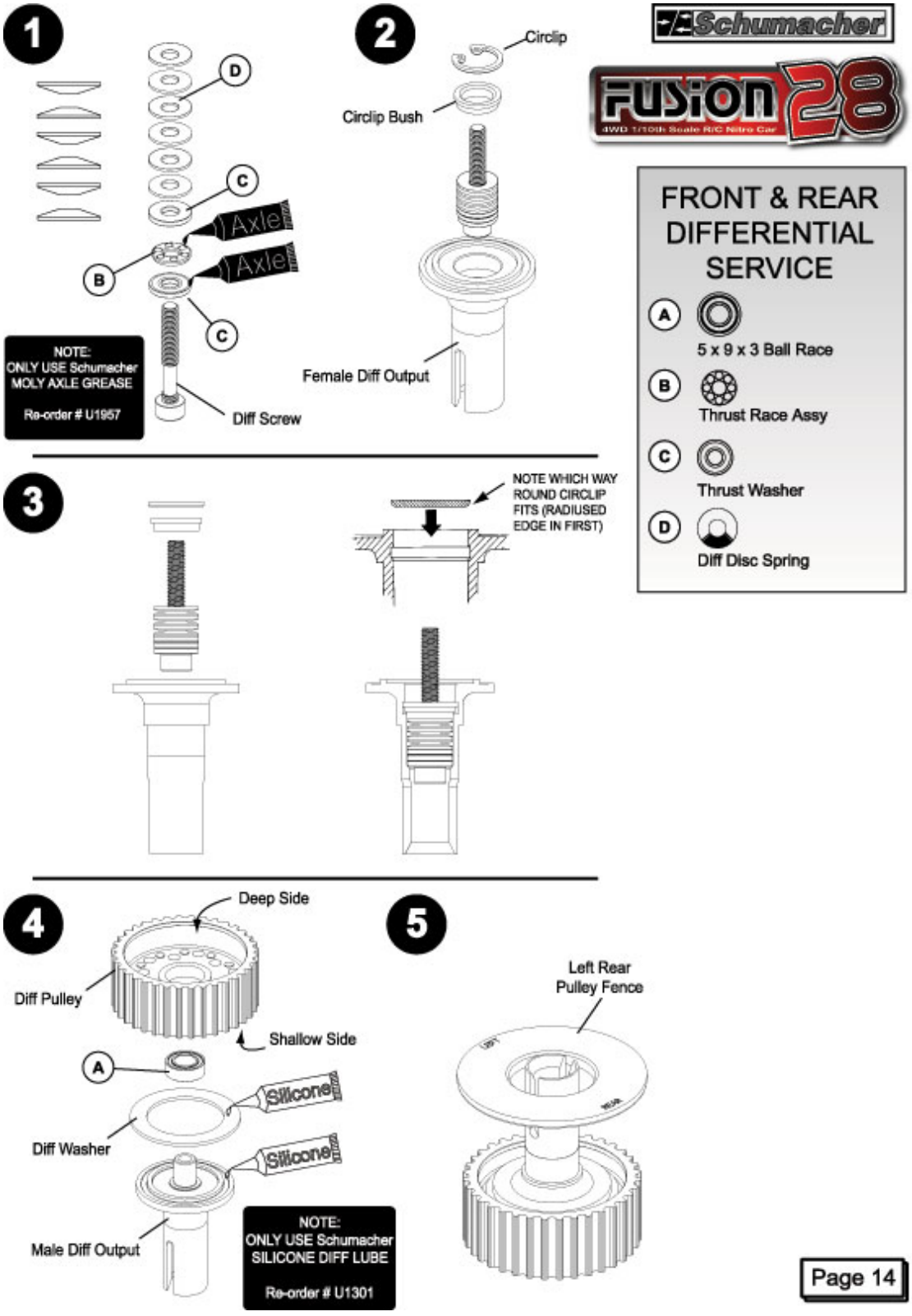
1
D
C
Axle
Axle
B
C
NOTE:
ONLY USE Schumacher
MOLY AXLE GREASE
Re-order # U1957
Diff Screw
2
Circlip
Circlip Bush
Female Diff Output
Schumacher
FUSION 28
4WD 1/10th Scale R/C Nitro Car
FRONT & REAR
DIFFERENTIAL
SERVICE
A
5 x 9 x 3 Ball Race
B
Thrust Race Assy
C
Thrust Washer
D
Diff Disc Spring
3
NOTE WHICH WAY
ROUND CIRCLIP
FITS (RADIUSED
EDGE IN FIRST)
4
Deep Side
Diff Pulley
Shallow Side
A
Silicone
Diff Washer
Silicone
Male Diff Output
NOTE:
ONLY USE Schumacher
SILICONE DIFF LUBE
Re-order # U1301
5
Left Rear
Pulley Fence



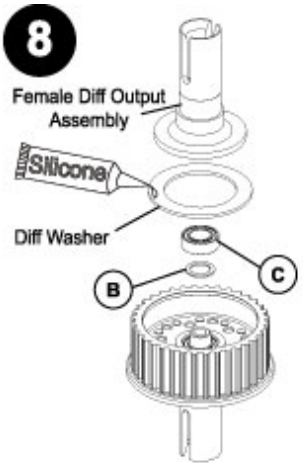

Schumacher

FUSION 28
4WD 1/10th Scale R/C Nitro Car

FRONT & REAR DIFFERENTIAL SERVICE

- (A) 2.5mm Dia Diff Ball
- (B) Thin Shim
- (C) 5 x 9 x 3 Ball Race
- (D) M3 x 6 Grub Screw

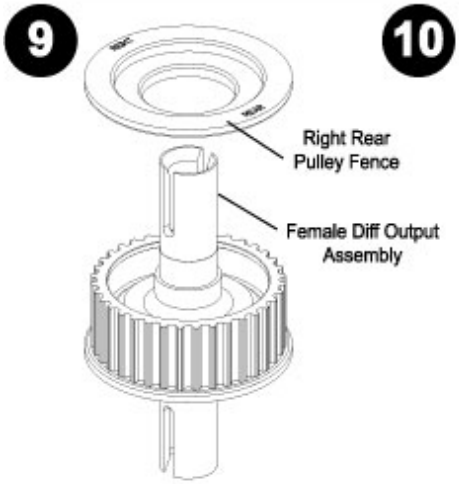

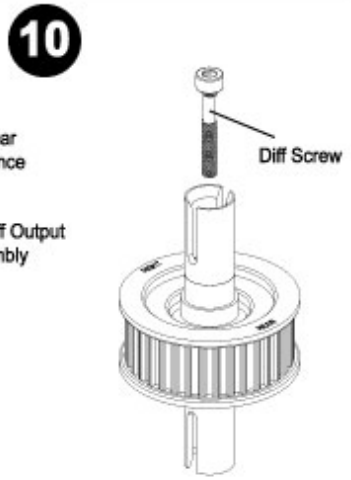

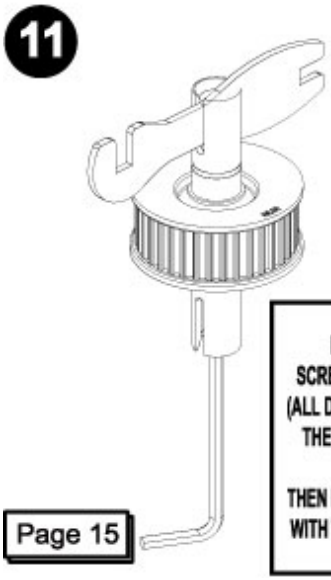

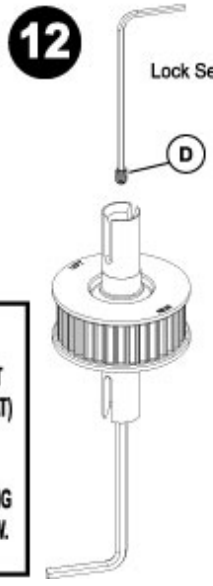

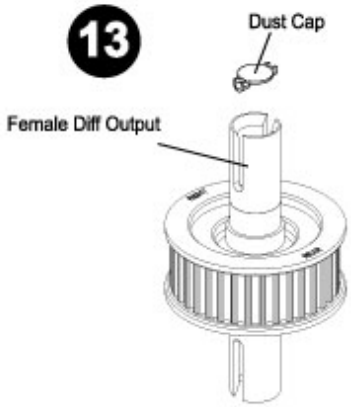

DIFF SETTING SCREW IN UNTIL TIGHT (ALL DISC SPRINGS FLAT) THEN UNDO ¼ TURN.

THEN LOCK THE SETTING WITH THE GRUB SCREW.

1

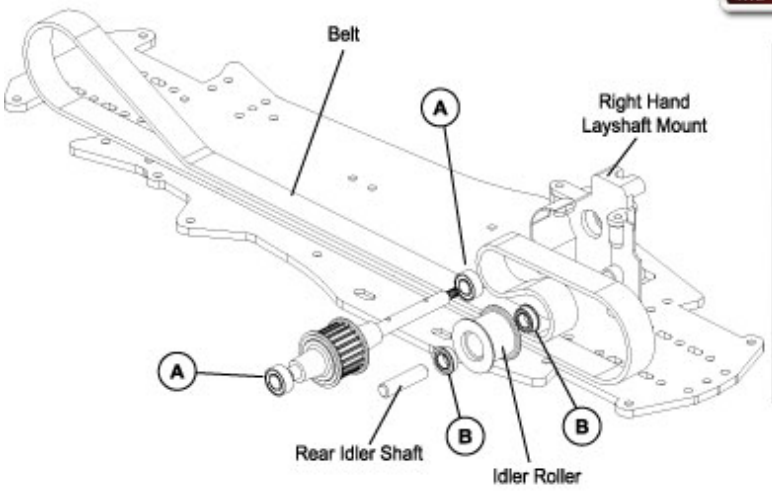

TRANSMISSION
Parts required:

A 5 x 10 Ball Bearing

B 5 x 9 Flanged Ball Bearing

2

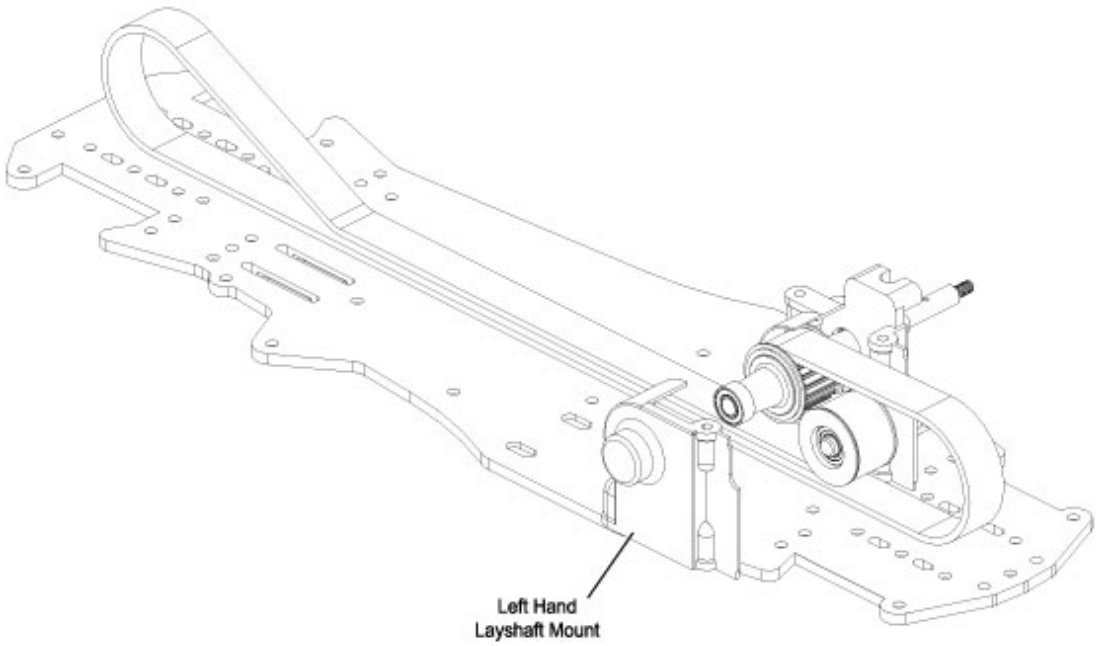

3

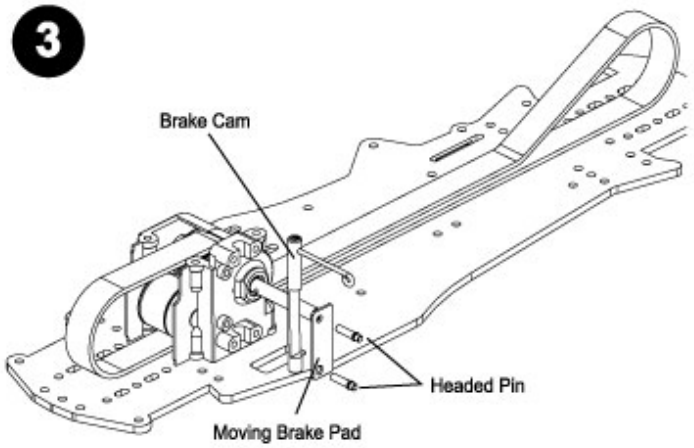

Schumacher

FUSION 28

4WD 1/10th Scale R/C Nitro Car

TRANSMISSION
Parts required:

(A) 1.5mm x 9.8mm Pin

(B) M3 x 8 Pan TORX

4

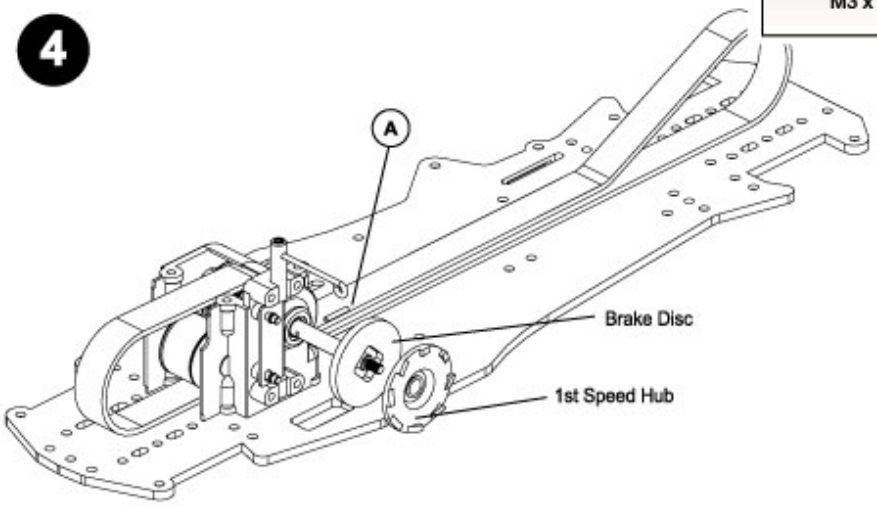

5

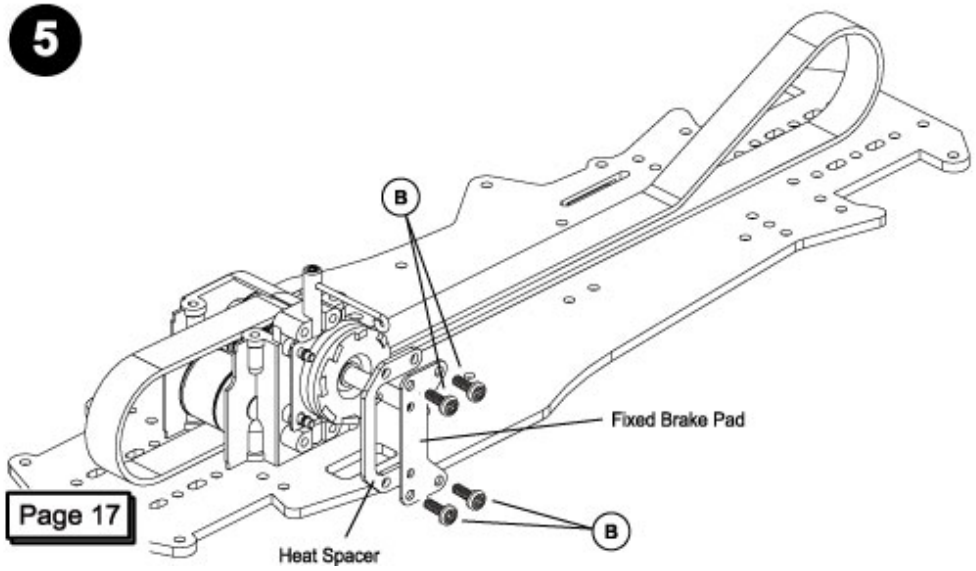

Schumacher

FUSION 28
4WD 1/10th Scale R/C Nitro Car

6

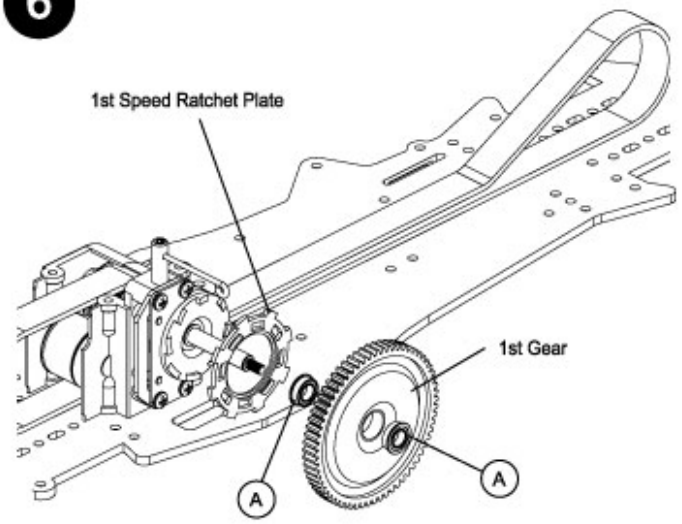

TRANSMISSION
Parts required:

- (A) 5 x 9 Flanged Ball Bearing
- (B) Thin Shim
- (C) 1.5mm x 9.8mm Pin

7

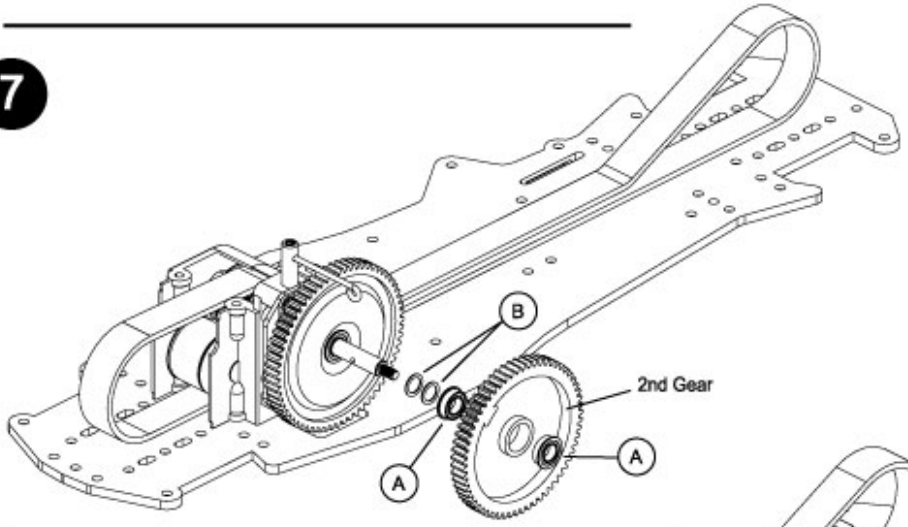

8

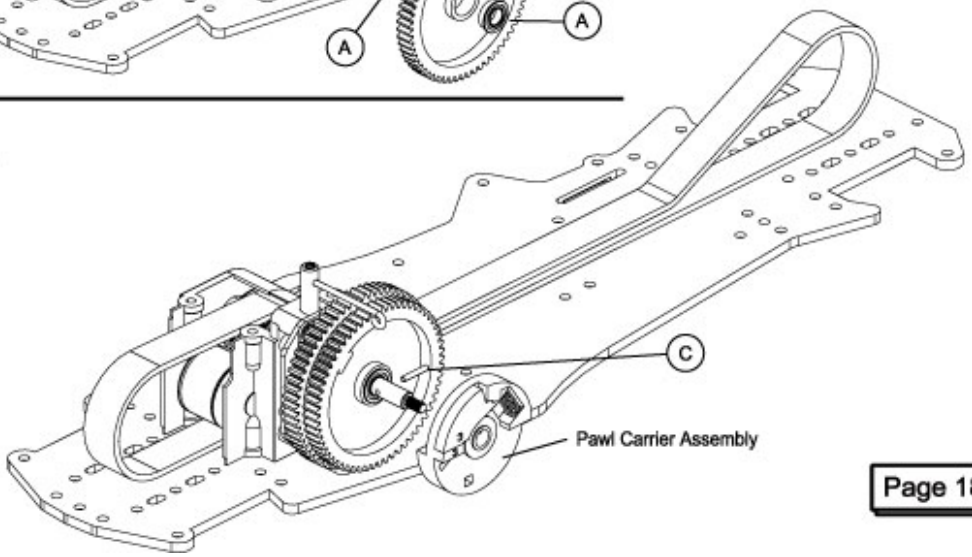

Schumacher

FUSION 28
4WD 1/10th Scale R/C Nitro Car

9

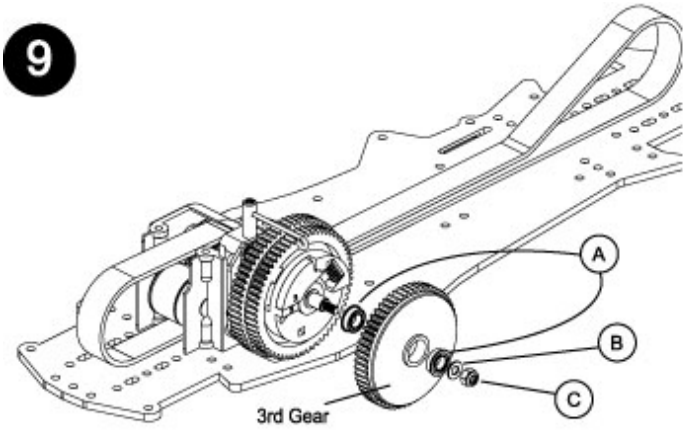

TRANSMISSION
Parts required:

A — 5 x 9 Flanged Ball Bearing

B — M3 Steel Washer

C — M3 Nyloc Nut

D — M3 x 12 Csk TORX

10

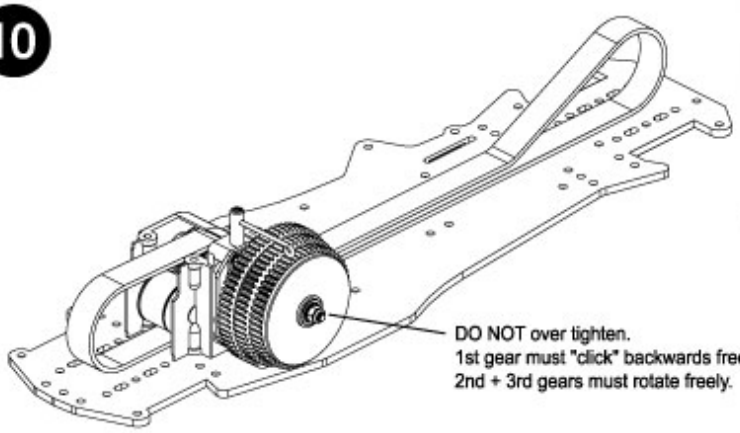

11

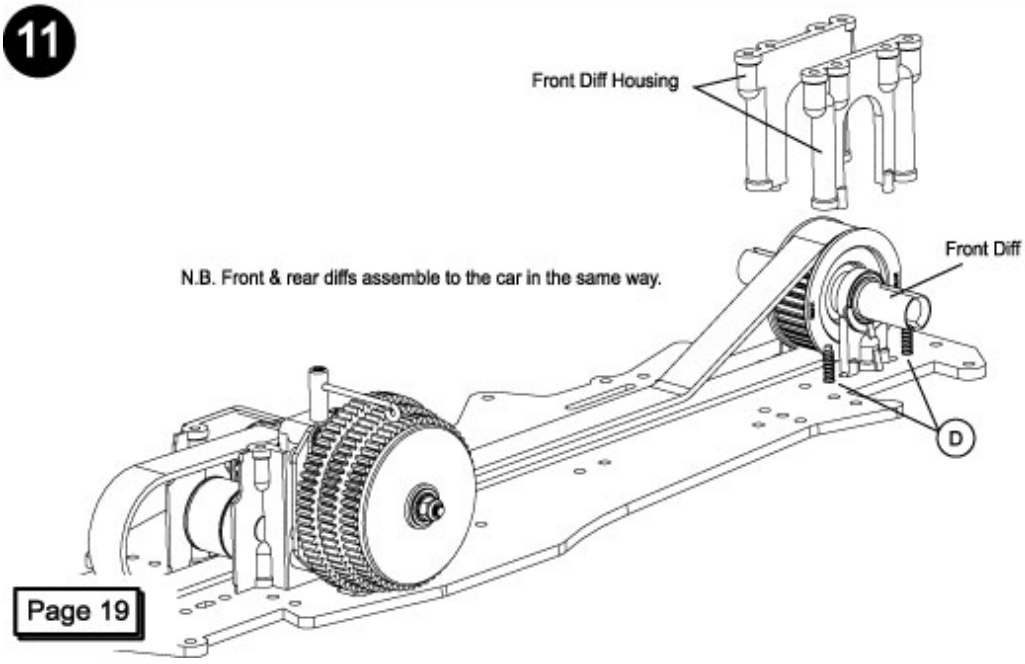

5 Install Servos

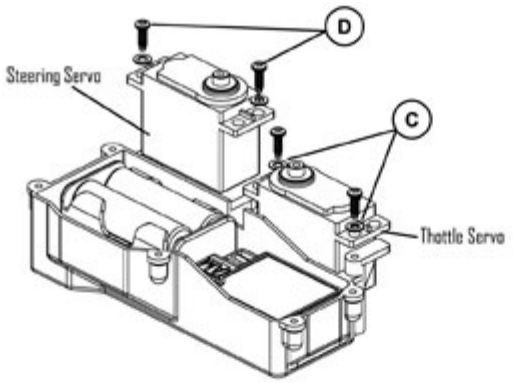

6

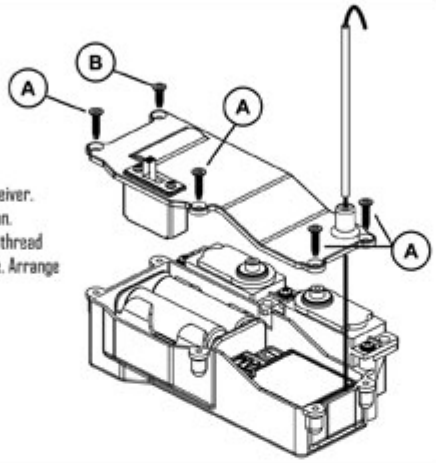

Connect up servos, battery, switch & receiver. Install batteries into transmitter & turn on. Test both servos work. Then switch off & thread aerial wire through the lid & into the tube. Arrange wires into the radio box. Assemble lid.

7

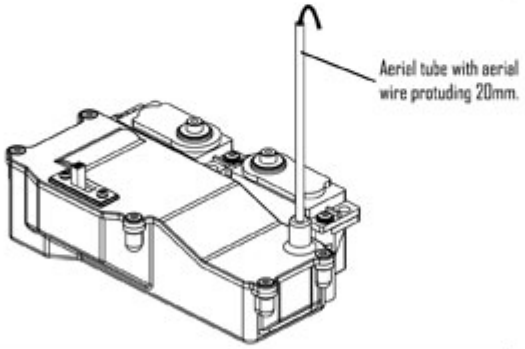

Secure lid to the box. Re-test to ensure the servos work.

8

Re-assemble radio box to car.

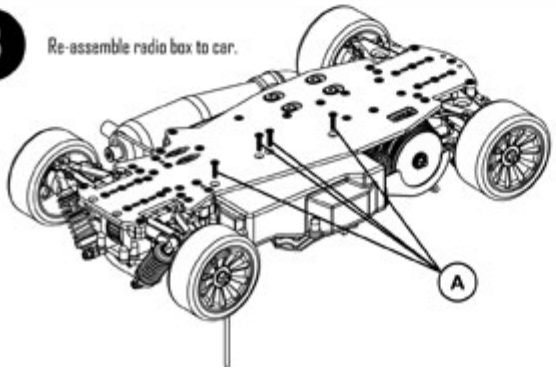

Schumacher

FUSION 28

4WD 1/10th Scale R/C Nitro Car

RADIO INSTALLATION Continued

A — M3 x 12 Csk TORX

B — M3 x 10 Csk TORX

C — M3 Steel Washer

D — M3 x 10 Pan TORX

1 Front

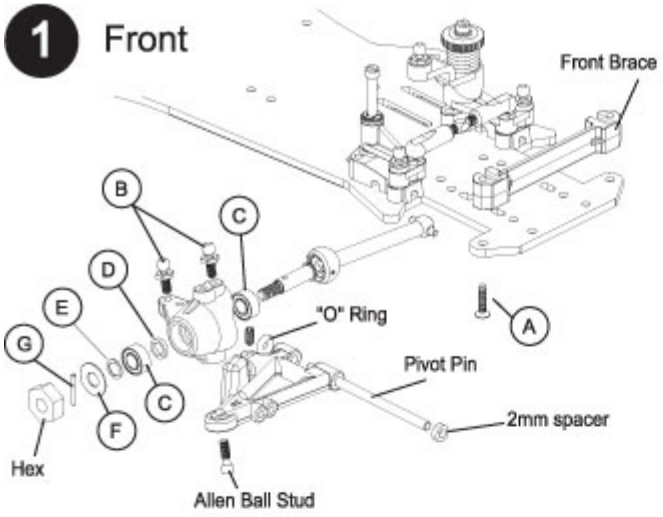

2

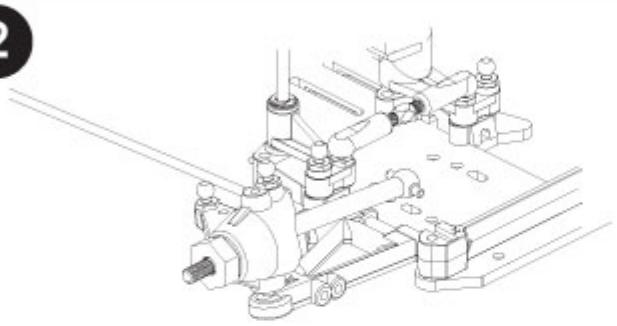

3 Rear

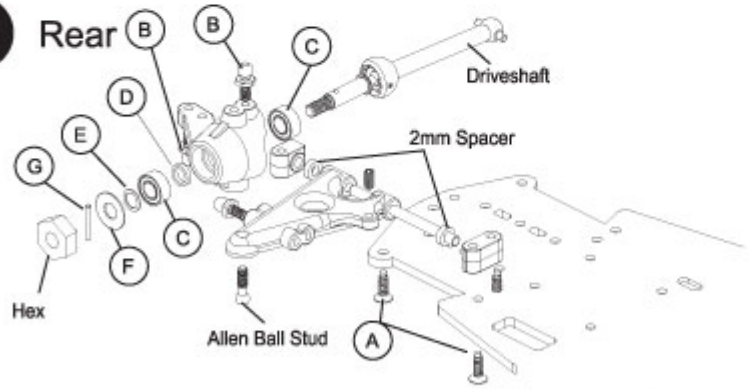

4

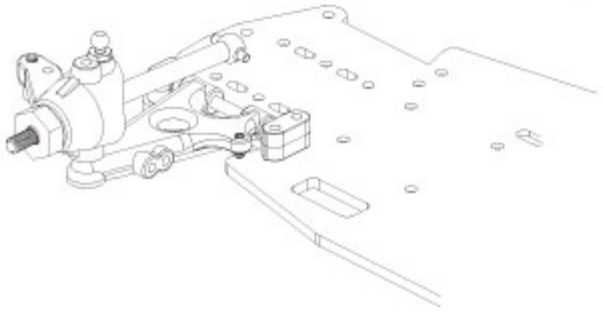

FRONT & REAR WISHBONE MOUNTING

- A — M3 x 12 Csk TORX
- B — Ball Stud Short M3
- C — 5 x 10 Ball Race
- D — THICK shim
- E — THIN shim
- F — Disc Spring
- G — 1.5mm x 11.8mm Pin

Schumacher

FUSION 28

4WD 1/10th Scale R/C Nitro Car

CENTRE BELT COVERS

Parts required:

- (A) M3 x 8 Csk Head
- (B) M3 Steel Washer
- (C) M3 x 4 Button Head
- (D) Ball Stud Long M3

1

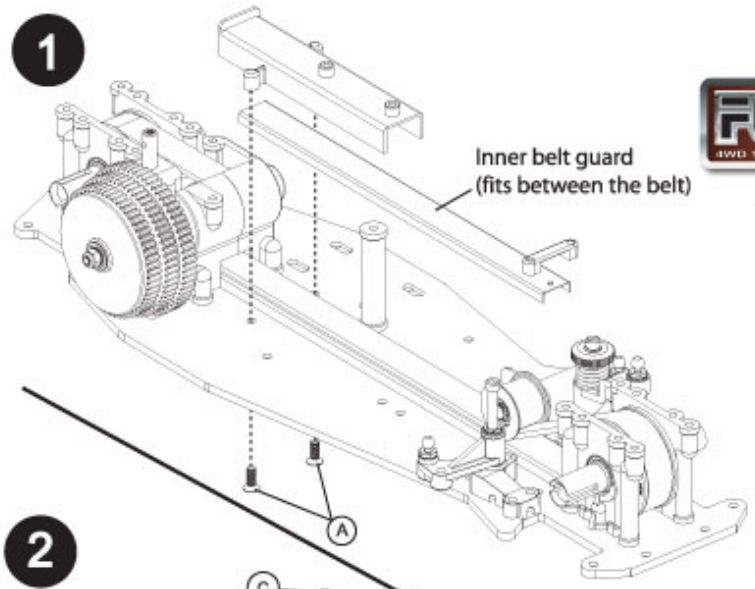

2

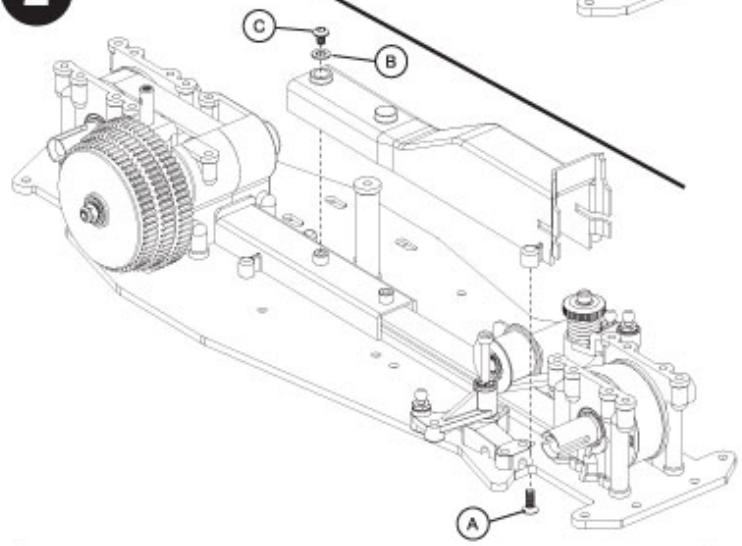

3

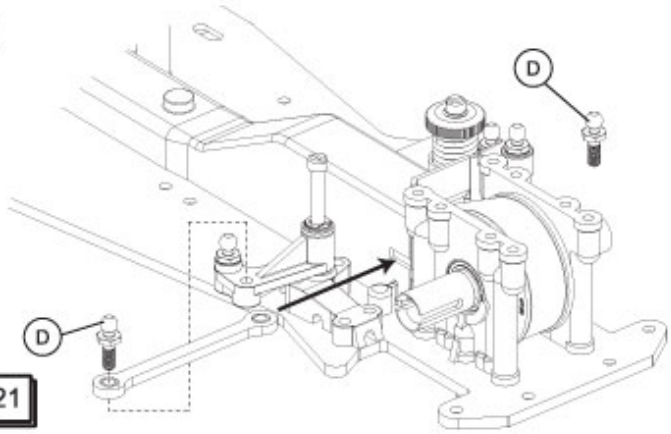

Schumacher

FUSION 28

4WD 1/10th Scale R/C Nitro Car

TOP DECK AND GEAR COVER

Parts required:

A — M3 x 8 Button Head

B — M3 x 12 Csk Head

C — M3 x 8 Csk Hex

1

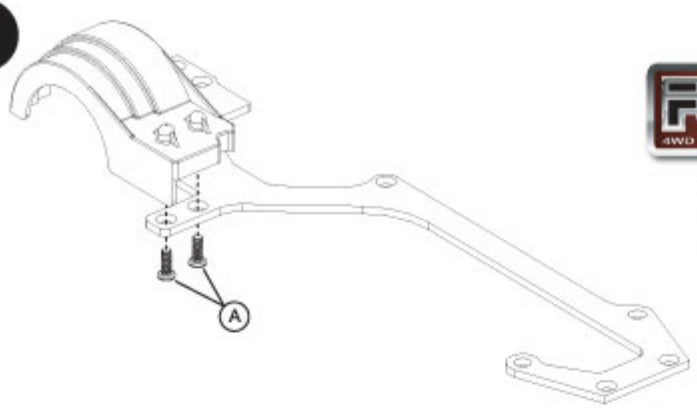

2

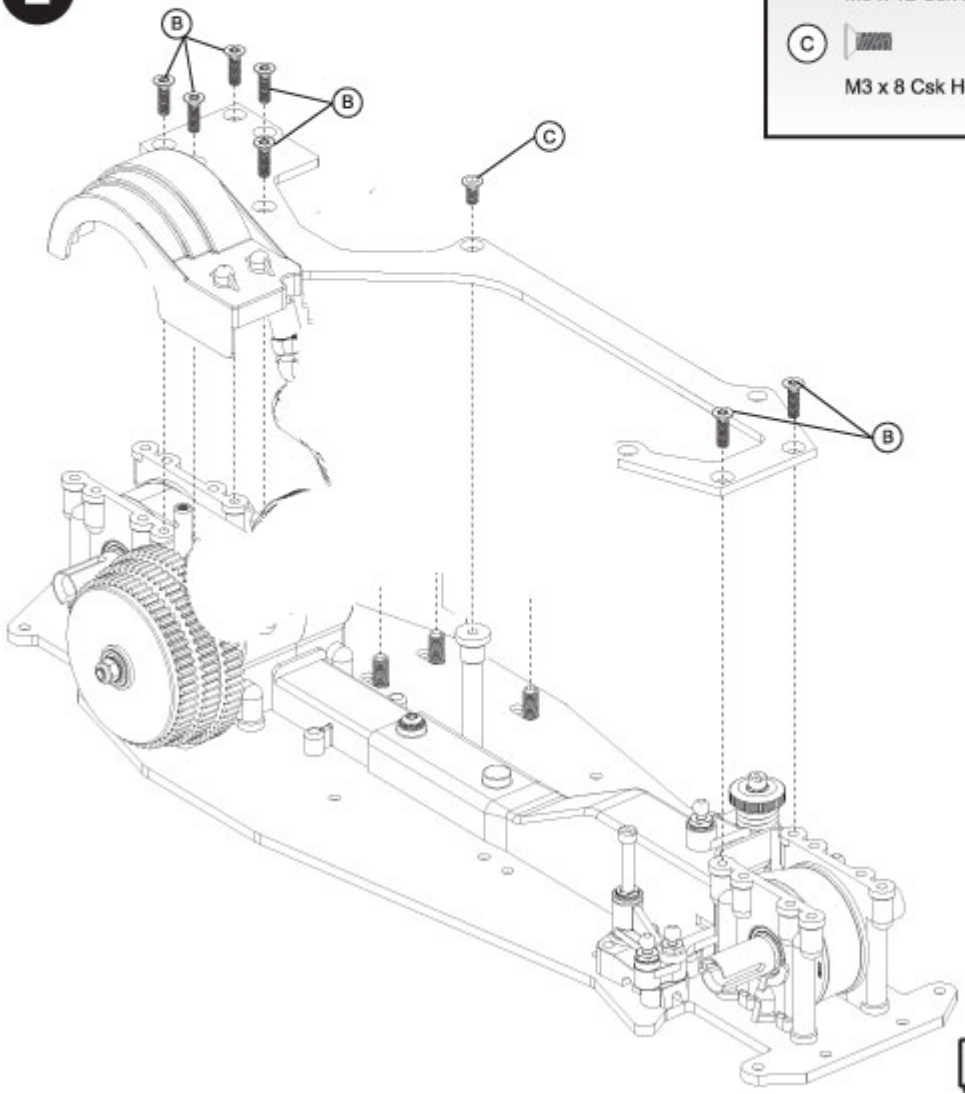

Schumacher

FUSION 28

4WD 1/10th Scale R/C Nitro Car

FRONT AND REAR BELT COVERS

1

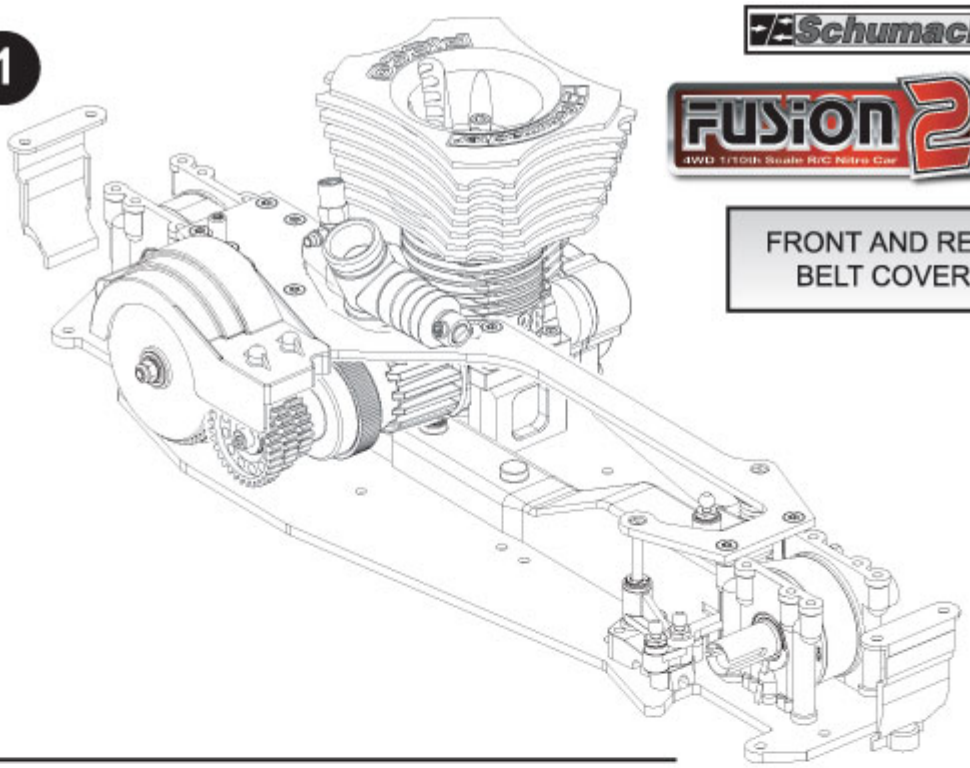

2

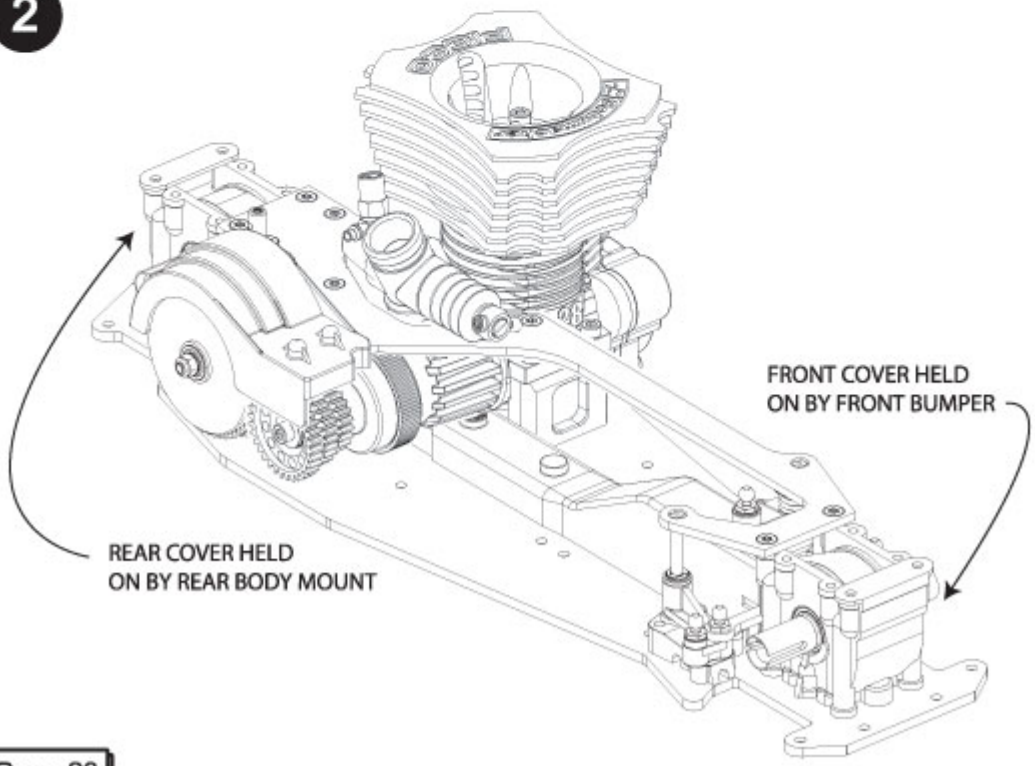

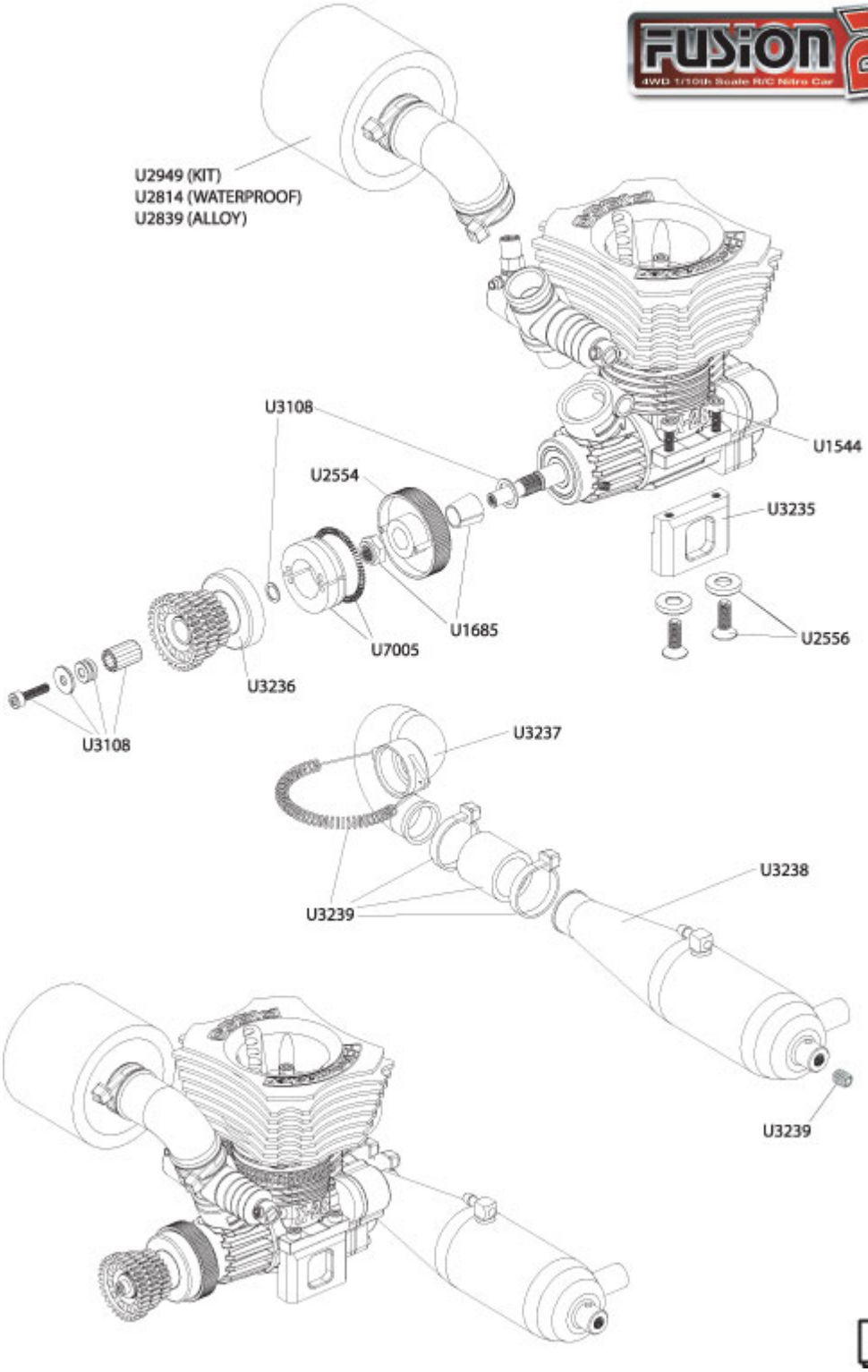
U2949 (KIT)
U2814 (WATERPROOF)
U2839 (ALLOY)
U3108
U2554
U1544
U3235
U1685
U7005
U2556
U3236
U3108
U3237
U3238
U3239
U3239

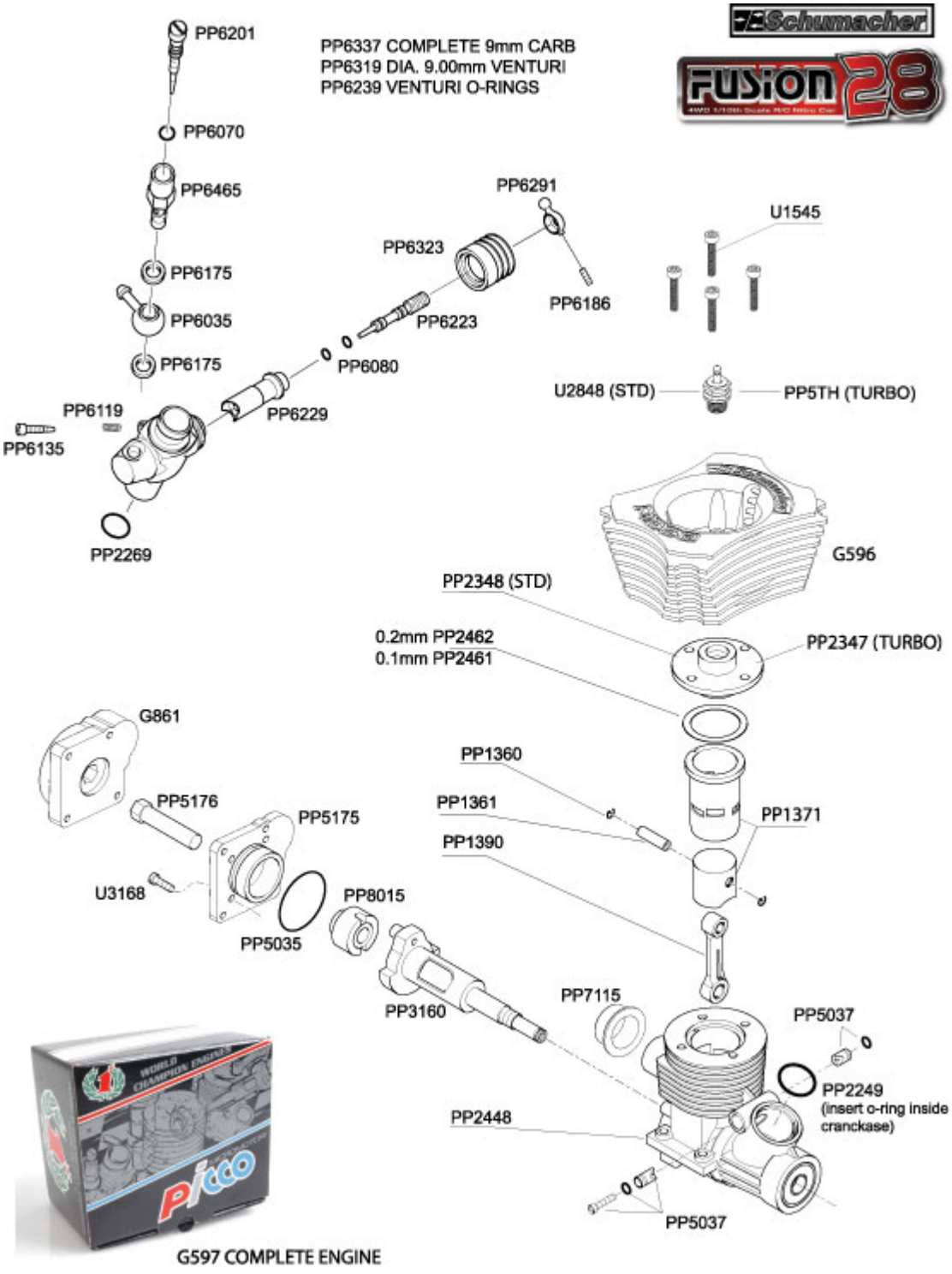
PP6201
PP6337 COMPLETE 9mm CARB
PP6319 DIA. 9.00mm VENTURI
PP6239 VENTURI O-RINGS
PP6070
PP6465
PP6291
U1545
PP6323
PP6175
PP6186
PP6035
PP6223
PP6175
PP6080
U2848 (STD)
PP5TH (TURBO)
PP6119
PP6229
PP6135
PP2269
G596
PP2348 (STD)
0.2mm PP2462
0.1mm PP2461
PP2347 (TURBO)
G861
PP1360
PP1361
PP1371
PP5176
PP5175
PP1390
U3168
PP8015
PP5035
PP3160
PP7115
PP5037
PP2249
(insert o-ring inside
cranckase)
PP2448
PP5037
G597 COMPLETE ENGINE

REAR TOE-IN/OUT (Out-board)

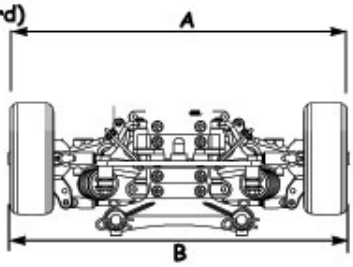

The rear toe-in is set by adjusting the turnbuckles at the rear of the car.

Toe-In = A less than B
Toe-Out = A greater than B

2.5° toe-in each side is a good standard setting. This offers a good level of rear grip.

Reducing the rear toe-in offers better steering response and more straight line speed, but less stability

REAR TOE-IN (In-board)

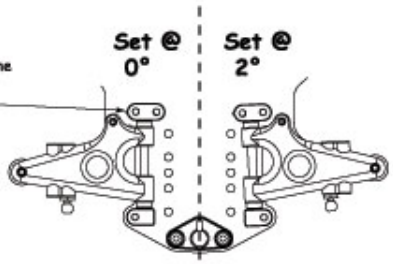

The rear In-Board Toe-In is set by fitting the pivot blocks (see page 20 ❽ & ❾). With the ridge facing in or out.

Facing in = 2° Toe-In
Facing out = 0° Toe-In

0° Toe-In each side is the standard setting. 2° Toe-In each side offers better rear end grip, but less steering response.

ANTI SQUAT & SUSPENSION DROOP

The car has 0° anti squat as standard. More anti squat will give more on power traction, but less off power traction, however too much will make the car unstable when turning into high speed corners. With 0° anti squat the steering will be precise & positive. On slippery tracks add anti squat.

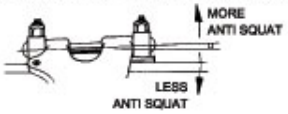

The suspension droop can be adjusted using the grub screw in the lower wishbones. Less droop improves steering response. More droop increases rear grip.

RIDE HEIGHT

In general always run the car as low as possible, without the chassis grounding out, as it rolls into corners.

Run the front 0.5mm to 1.0mm lower than the rear, to give more steering.

A good starting point is 5.5mm at the front and 6.0mm at the rear.

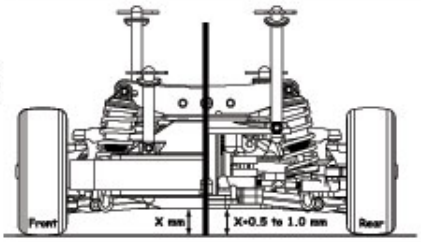

WHEELBASE (set on REAR wishbones)

The length of the wheelbase is set by fitting the spacers "G" (see page 20 ❶). In different positions.

In front of the wishbone = Long. Either side of the wishbone = Medium. Behind the wishbone = Short

Use spacers to maintain the wheelbase length after adjusting the Castor or Toe-In/Out.
In general a longer wheelbase will offer more steering.

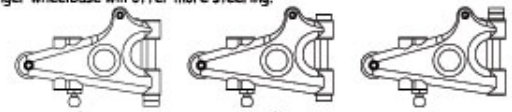

Short Medium Long

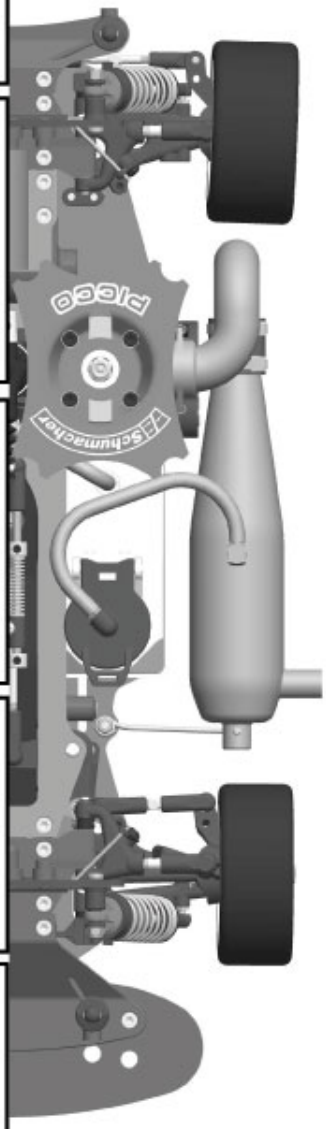

FRONT TOE-IN (Out-board)

The front toe-in is set by adjusting the steering trackrod turnbuckles.

Toe-In = A less than B
Toe-Out = A greater than B

Toe-in will give a more stable car, but will give less sharp turn in. We recommend to start at about 1° each side. Maximum 2° each side.

Toe-out will give the opposite, less stability with sharper turn in to the corners.

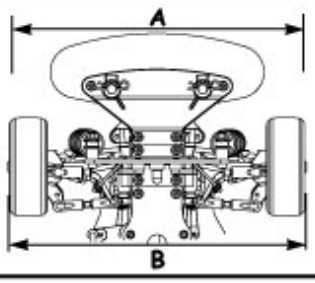

Schumacher

FUSION 28

4WD 1/10th Scale R/C Nitro Car

TRACK SETTINGS

FRONT TOE-OUT (In-board)

The front In -board toe-out is set by fitting the front strap (see page 20 ❶) with the 2° mark up or down.

2° mark showing (up) = 0°.
2° not showing (down) = 2° toe-out.

With the In-board position set to 2° the steering will be smooth and progressive, when set to 0° the steering is more aggressive.



SPRINGS

The spring rate controls the suspension stiffness.
Fit spring spacers only to change the ride height. They DO NOT alter the suspension stiffness. On slippery or bumpy tracks use soft to medium rate springs, on flat or high grip tracks run medium to hard rate springs.

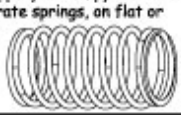

FRONT CASTOR

The front castor can be altered by moving the two washers on the top wishbone pivot pin. Less castor will give a quicker steering response, but could lead to power on understeer. More castor will give the opposite, slightly slower turn in, but more power on steering.

11° = 2 washers at rear.

8.5° = 1 washer each side.

6° = 2 washers at front.

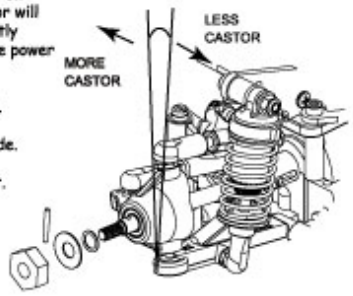

LOWER SHOCK POSITION

Inner (standard) position is best for most tracks & conditions. The outer position is good on VERY high grip tracks.

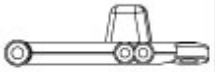

SHOCK BRACKETS

Vertical shock absorbers make the car react sharply to driver inputs. A laydown shock offers a softer feel to the driver.

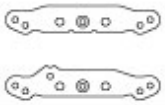

HUB CARRIER

Position 1 offers an aggressive initial steering response. Position 2 (standard) offers a softer initial steering response.

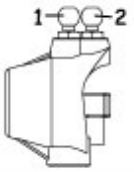

Use hole 1 for a faster, more aggressive steering response and more lock. Use hole 2 for smoother more proprtional steering. Hole 2 is generally better on high grip tracks.



UPPER SUSPENSION MOUNT



The upper (standard) hole makes the car smooth and predictable. The lower hole can offer better grip, but with a much less predictable breakaway.

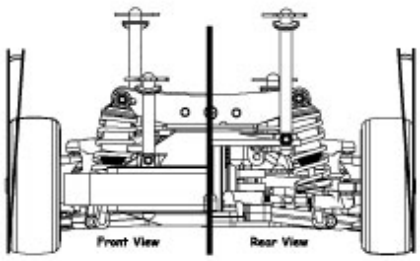

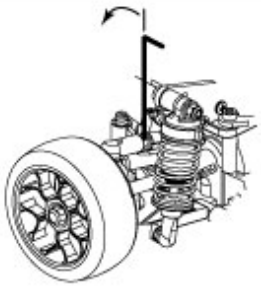



FRONT & REAR CAMBER

Car as standard will have 4° negative camber (the top of the wheels lean inward). Set the camber to 1° negative by adjusting the top wishbone turnbuckle. To reduce camber look at wheel face on & turn allen key anti-clockwise as shown above - This is the same for all four wheels. With maximum camber (4°) the car will have high levels of grip, but there may be the possibility of sudden breakaway in corners. Reducing the camber gives a more progressive slide, but may give less grip. See set up sheet.

Schumacher

FUSION 28
4WD 1/10th Scale R/C Nitro Car



Purple Alloy Diff Mounts (Pr)
U2462



Purple Alloy Upper Suspension Mount
U2626



Purple Alloy Fuel Filter
U2851
With "Sintered Brass Filter.



Pro Spring Set
(5 pairs)
U2822



Pro Differential
U2541



Alloy Air Filter 21/28
U2839
Single Stage Foam



Rechargable Glow Starter
G853 UK.
G855 USA.



Purple Alloy Front Hubs (Pr)
U2163
Purple Alloy Rear Hubs (Pr)
U2743



Alloy Rachet & Brake Hub
U2780



Water Proof Air Filter
U2814
Dual Stage Foam!

"D" Cell Glow Starter
H1023
Easy to use, requires "G719" "D" cell battery



Purple Alloy Threaded Shocks
Pack of 4 Bodies and Collars
U2297



Kwik Klips
U2251

G852 - (UK 240v)
G854 - (USA 110v)





Nitro Failsafe (Micro)
H1033



Purple Alloy Shock Seal Housings (Pr)
U1818



Pro Thrust Race Assembly
U1954



U1552 ~ Silver Body Clips
H1010 ~ "Fluro" Yellow Body Clips
H1011 ~ "Fluro" Green Body Clips
H1012 ~ "Fluro" Red Body Clips
H1013 ~ "Metallic" Red Body Clips
H1014 ~ "Metallic" Blue Body Clips
H1015 ~ "Metallic" Purple Body Clips

All body clips come in packs of ten.



Purple Alloy Wheel Hex (Pr)
U2401



U2813 Gold Wheel Nuts
U2812 Black Wheel Nuts
U2810 Red Wheel Nuts
U2811 Blue Wheel Nuts
U2135 Purple Wheel Nuts
CR024 Core serrated nuts



Fireball Glow Plug
U2848
Super Cool Plug



Cordless Drill
Ideal for "e" start
G561

Specification may vary.



Alloy Upper Wishbones (Pr)
U2767



Ceramic Nitride Diff Balls
(12)
U3019



Pocket Start 2
G857

Requires 7.2v Battery and charger

Schumacher

FUSION 28
4WD 1/10th Scale R/C Nitro Car

STEERING LINK
Parts required:

(A) M3 Nyloc Nut

(B) Ball Stud Short M3

1

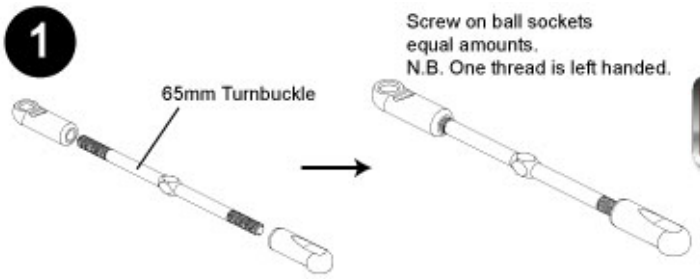

2

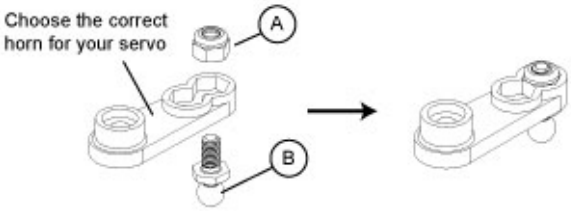

3

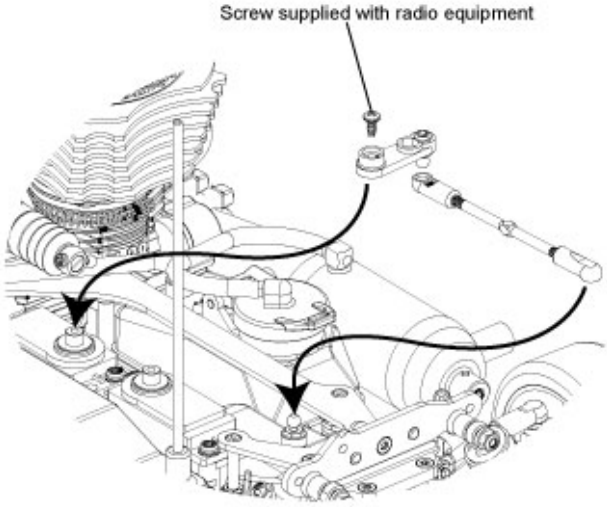

4

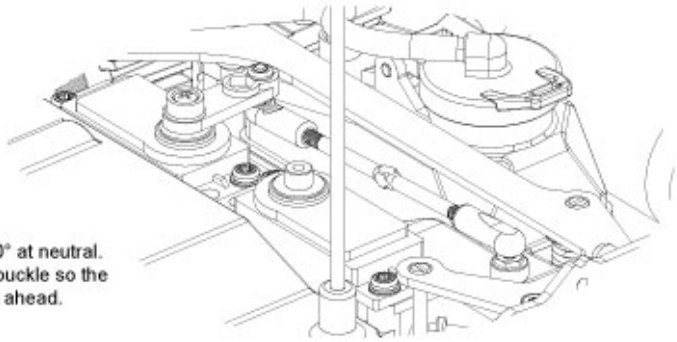

Screw servo on at 90° at neutral.
Then adjust the turnbuckle so the
wheels point straight ahead.

Schumacher

FUSION 28
4WD 1/10th Scale R/C Nitro Car

1

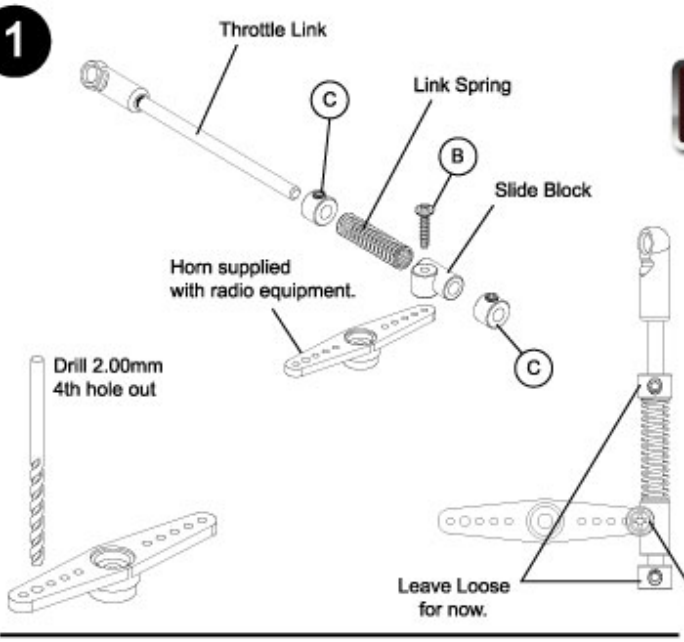

THROTTLE LINK
Parts required:

- (A) Ball Socket
- (B) No2 3/8 Pan Head
- (C) Collar & grub screw

Adjust so the slide block rotates freely.

2

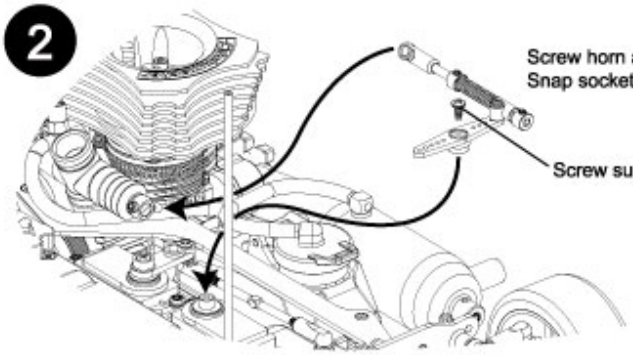

3

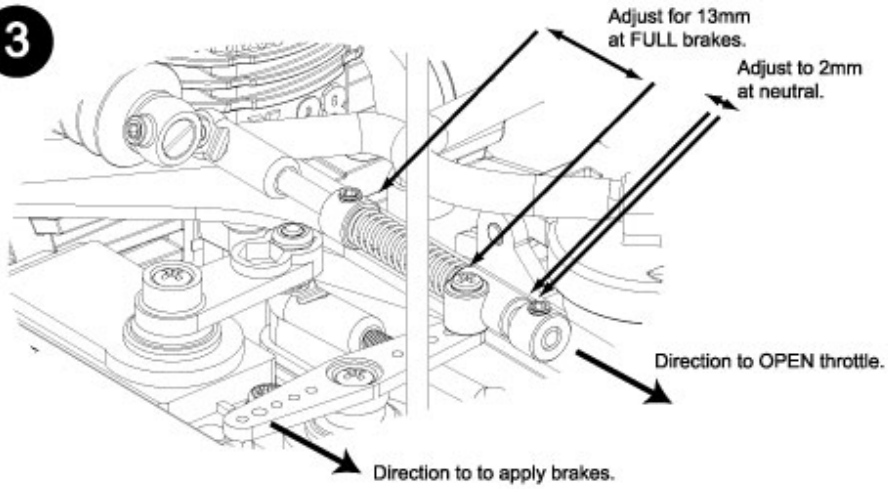

Schumacher

FUSION 28
4WD 1/10th Scale R/C Nitro Car

BRAKE LINK
Parts required:

(A) Collar & grub screw

1

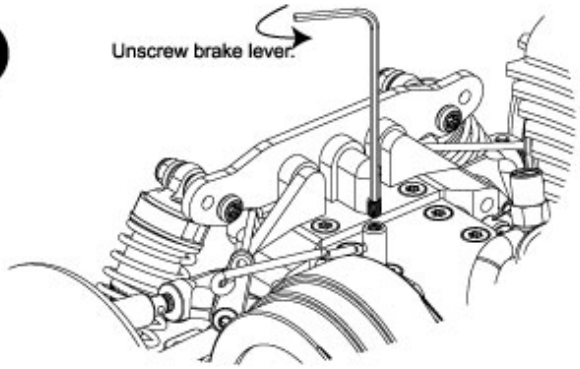

2

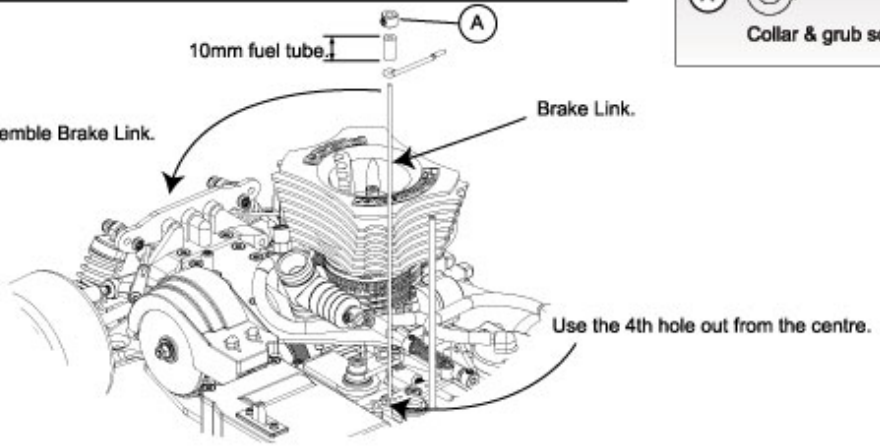

3

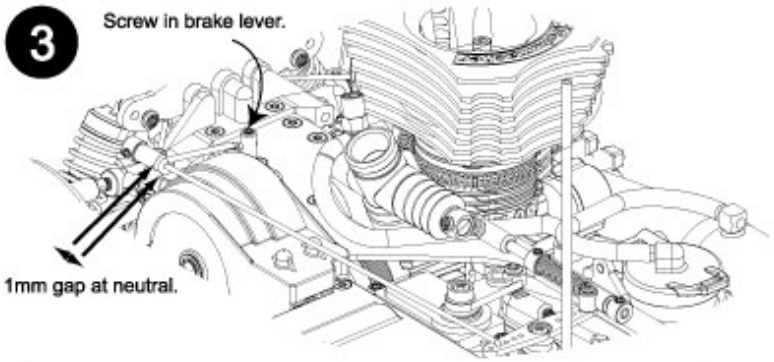

4

Attach carb return spring on the outer most hole on the servo horn.

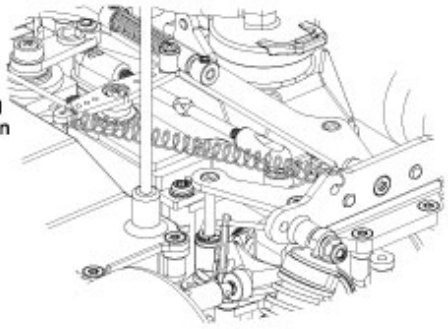

Schumacher

FUSION 28

4WD 1/10th Scale R/C Nitro Car

AIR FILTER & FUEL PIPE INSTALLATION

1

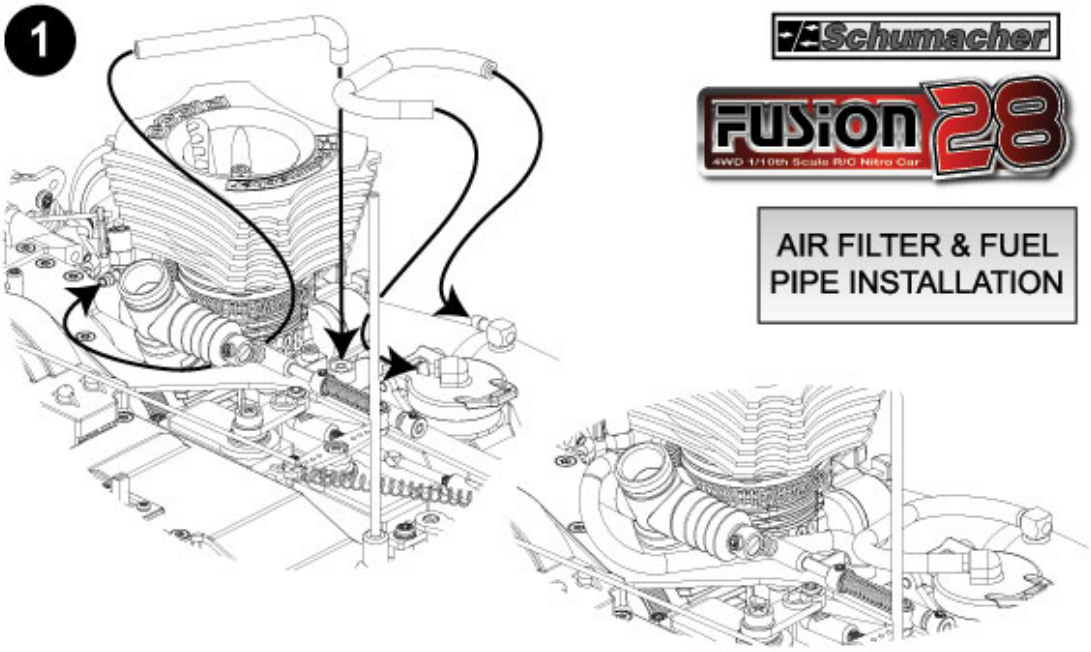

2

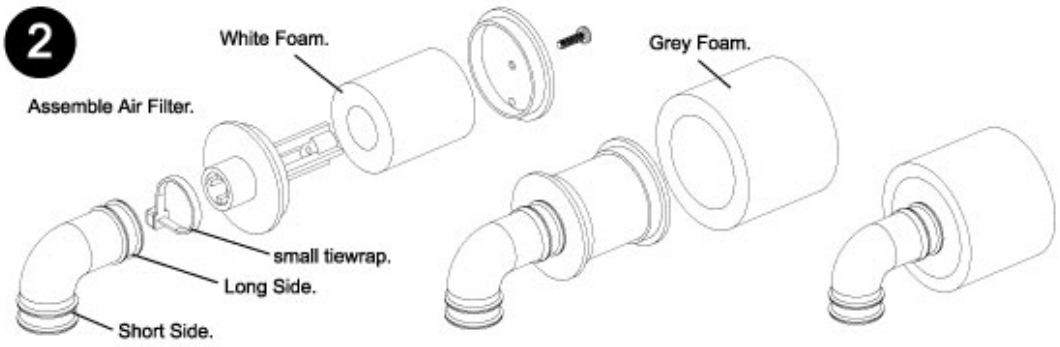

3

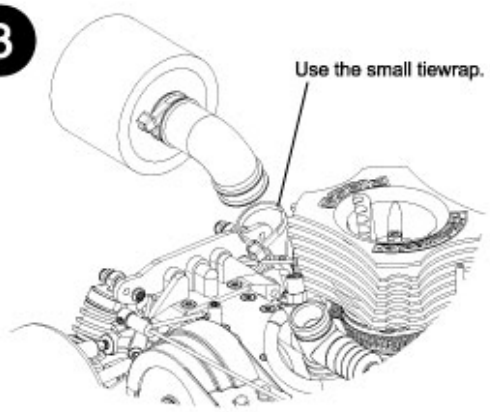

IMPORTANT - We reccomend using H1037 Air Filter Oil on both foam filters

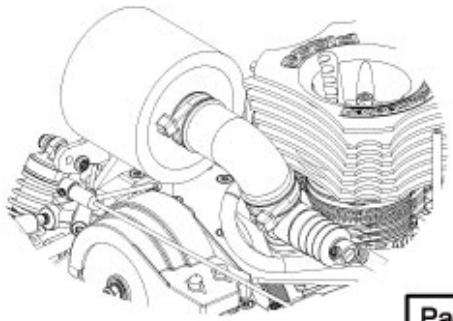

Schumacher

FUSION 28

4WD 1/10th Scale R/C Nitro Car

FRONT BUMPER
Parts required:

(A) M3 x 16 Csk TORX

(B) M3 x 12 Csk TORX

1

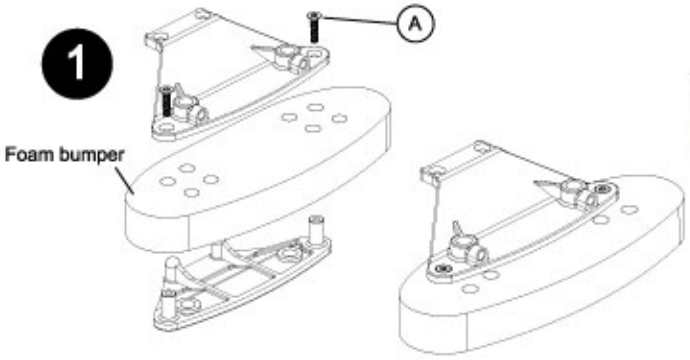

2

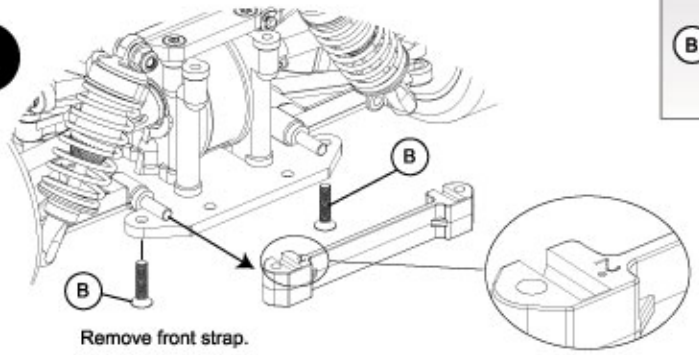

Remove front strap.

3

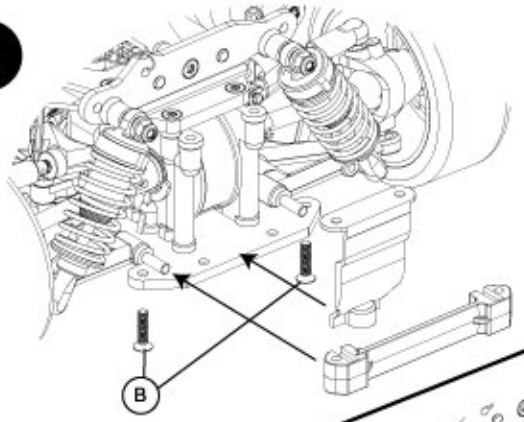

4

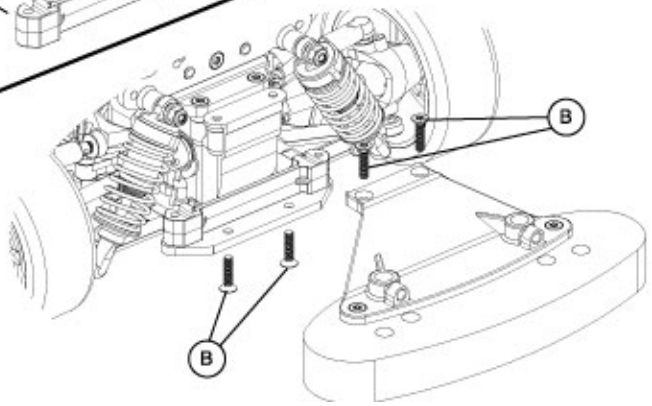

Schumacher

FUSION 28
4WD 1/10th Scale R/C Nitro Car

BODY MOUNTS
Parts required:

A — M4 x 6 Grub Screw

B — M3 x 12 Csk TORX

C — "R" Clip

1

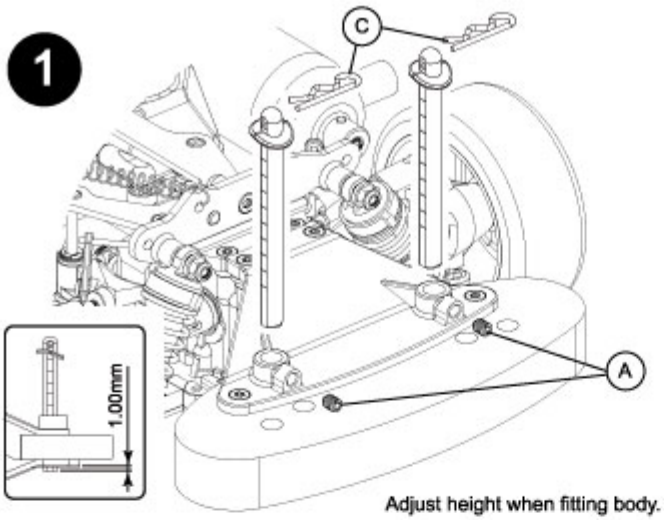

Adjust height when fitting body.

2

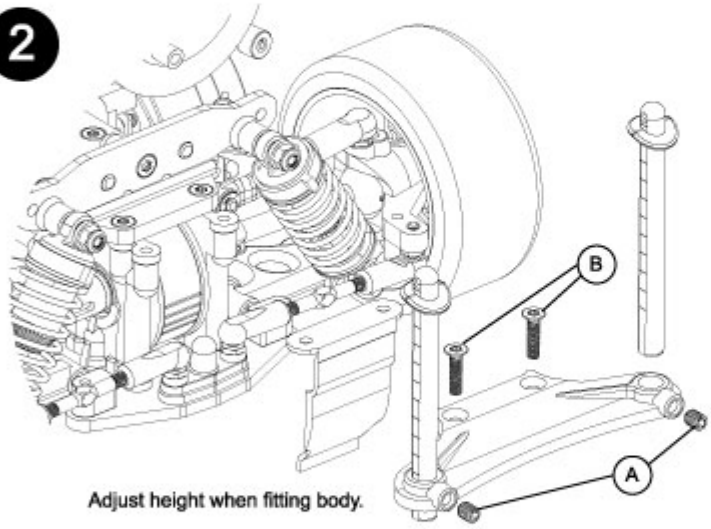

Adjust height when fitting body.

3

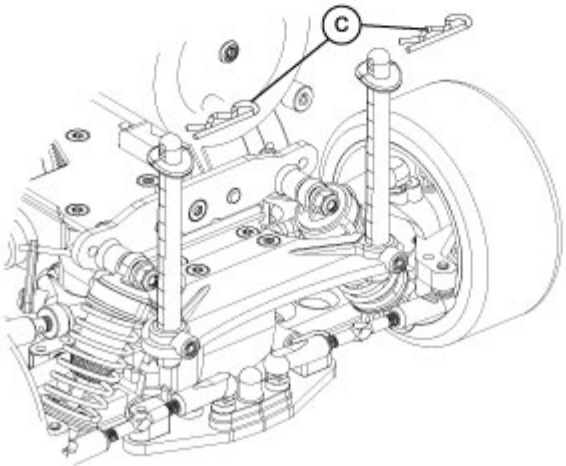

Schumacher

FUSION 28

4WD 1/10th Scale R/C Nitro Car

STARTING THE ENGINE

1 SET UP DRILL

After charging your drill, insert the Electric start adaptor **(ball end out)** and tighten the chuck.
ENSURE THE DRILL ROTATES ANTI-CLOCKWISE

Set the torque setting to the lowest possible setting, that will turn the engine over.

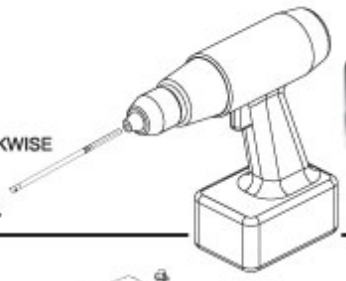

2 FILL FUEL TANK

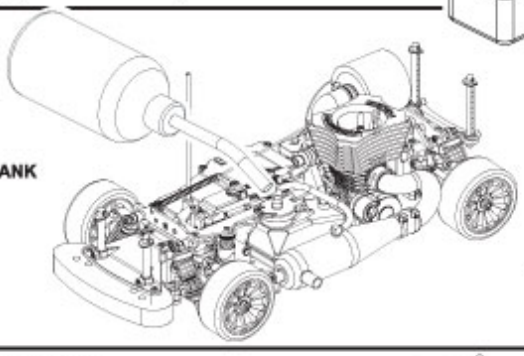

SEE WARNING SHEET FOR FUEL RECOMMENDATIONS



3 PRIMING ENGINE

TURN ON TRANSMITTER.
SWITCH ON RECEIVER.



ENSURE THROTTLE TRIM IS AT NEUTRAL

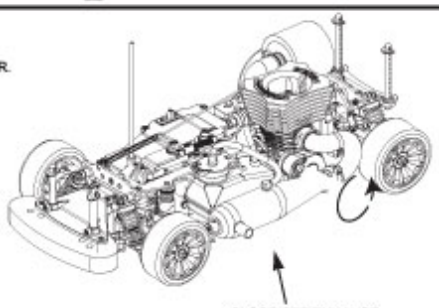

CLOSE OFF EXHAUST WITH FINGER.

PLEASE NOTE:
1. Only insert the ball end of the driver.
2. NEVER insert the driver if the drill is spinning.

With the drill STATIONARY
INSERT ball end INTO ELECTRIC START.
Turn on drill and watch for the fuel to enter the carb. Then keep going for 3 seconds more.
The engine is now primed.

4 STARTING ENGINE

HOLD GLOW START ONTO PLUG

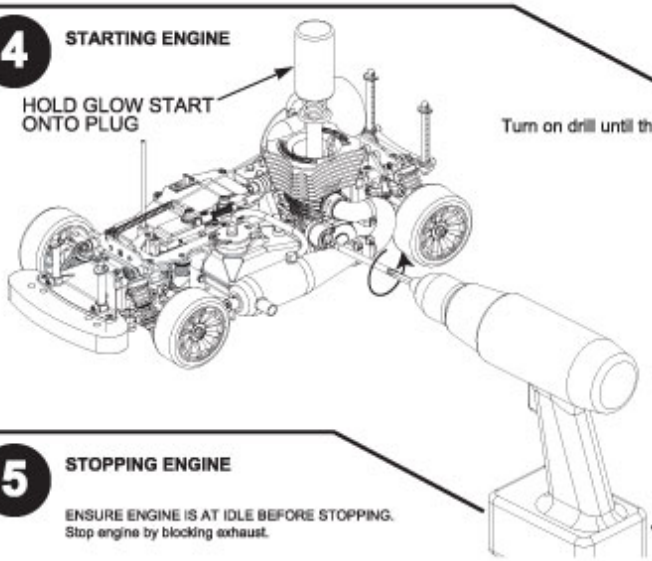

Turn on drill until the engines starts!

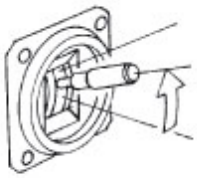

Pull out drill and gently rev the engine, then remove the glow start.

5 STOPPING ENGINE

ENSURE ENGINE IS AT IDLE BEFORE STOPPING.
Stop engine by blocking exhaust.

WARNING: **ENGINE AND TUNE PIPE WILL BE VERY HOT DO NOT TOUCH FOR SEVERAL MINUTES**

SAFETY

This product is not suitable for children under 14 years of age unless supervised by an adult.

Select an area for assembly that is away from the reach of small children. The parts are small and can be swallowed by small children causing choking and possible internal injuries.

Shock fluids, grease and adhesives should be kept out of childrens reach. They may be toxic and were not intended for human consumption.

Exercise care when using hand tools, sharp instruments or power tools during assembly.

Read the instructions fully and read the maunfacturers warnings and cautions for any addtional items that may be used for assembly purposes.

Nitro fuel is extremely hazardous READ all the manufacturers warnings before opening the container.

ALWAYS drive your car safely, away from public roads, and be aware of any people or animals near you. MODEL CARS CAN BE DANGEROUS!

WARNINGS

Use good quality fuel with synthetic oil such as Model Technics Dynaglow, Jets, Magnum, O'Donnel or Blue Thunder, with 16% - 25% nitro content. We do not recommend castor oil based fuels, as it leaves a "sticky residue" which can cause the electric start one way bearing to slip. A higher nitro content fuel will give more power, but will make the engine run hotter.

Nitro fuel, particularly racing fuels with a high nitro content and low oil content, is very corrosive, and can cause the engine to rust if fuel is left inside. We recommend running the car completely out of fuel, if it is to be left unused for a few days. This can be done by allowing the fuel tank to empty or by squeezing the fuel line until the engine stops. After run oil such as Ultimate Racing UR0903 also helps to reduce corrosion. Remove the glow plug or air filter, and put a few drops of after run oil into the engine. Then turn the engine over a few times with the electric start to circulate the oil around the moving parts. We cannot warranty a rusty engine.

NEVER run the engine without the air filter fitted.

Don't run the car at full throttle with the wheels off the ground, the engine MAY blow up in a matter of seconds.

Learn to use your power with respect. Very few surfaces can cope with full power. If you use full power everywhere you WILL break things!

Always ensure the transmitter & receiver batteries are fully charged before use.

Always ensure that all nuts and screws are tight and ensure gear mesh is correct.

Run in a new engine by using a rich fuel mixture, to ensure plenty of lubrication, and use no more than half throttle for the first 2 or 3 tanks of fuel.

Place a drop of lubricating oil on the clutch needle bearings after every hour of use.

This product is not a toy. It is a hobby product capable of high performance, but will require regular maintenance. Learn to drive the car slowly at first, away from solid objects, as heavy impacts may cause damage.

NITRO - ON ROAD CARS

K074	Fusion 28 Skyline ARR Blue/Silver
K075	Fusion 28 Skyline RTR Blue/Silver
K076	Fusion 28 Skyline ARR Red/Silver
K077	Fusion 28 Skyline RTR Red/Silver

CHASSIS PARTS

U119	Aerial Tube - Pack 4
U2231	Servo Horns
U2456	Foam Bumper - Mission
U2457	Bumper & Body Mounts - Mission
U2480	Body Posts & R Clips (pk 4)
U2506	Front Shock Mount; S1 - Fusion
U2507	Rear Shock Mount; S1 - Fusion
U2540	Radio Box
U2551	Belt Covers & Clamp - Fusion
U2556	Chassis Buttons & Engine Mount Screws
U2560	Alloy Chassis Post
U2677	Dirt Cover; Fr+Rr Diffs-Menace/Fusion
U2679	Dirt Cover; gears - Menace/Fusion
U2784	Top Deck S1 - Fusion 2
U2785	Centre Track Rod & Bushes - Fusion 2
U3240	CNC Alloy Chassis - Fusion 28
U3244	Instr Manual - Fusion 28

BODYSHELLS & DECALS

U3264	Decal Sheet - Fusion 28 (pk2)
U5094	Body; Clear - Skyline GTR
U5096	Body; Ready to Run; Red - Skyline GTR
U5097	Body; Ready to Run; Blue - Skyline GTR

SUSPENSION

U1426	Pivot Pin; grooved 29mm x 1/8 (pr)
U1427	Turnbuckle Adjuster - 65mm (pr)
U1430	Turnbuckle Adjuster - 39mm (pr)
U1440	Pro Pin; grooved 1/8x25mm (pr)
U1445	Steering Posts & Washer - 2000
U1446	Servo Saver Metal Parts - 2000 Series
U1481	Front Steering Post & Pivot Blocks
U1704	Ball Grippa Sockets (pk 8)
U1877	Hi-Tensile Pivot Ball Screw - SST(pr)
U1884	Rear Wishbones - SST2000 (pr)
U2005	M4 Turnbuckles pr
U2020	Front Wishbone; 7.5-13.5deg - SST (pr)
U2384	Hub Carrier; Vert King Pin Option - SST
U2450	Suspension Pivots & Blocks - Mission
U2467	Front Upper Wishbones - Mission
U2468	Rear Upper Wishbones - Mission
U2477	Pivot Pin; plain 57mm x 1/8
U2478	Pivot Pin; plain 45mm x 1/8
U2561	Anti-Roll Bars - Fusion (pair)
U2563	Steering Lever & Front Strap - Fusion
U2564	Upper Suspension Mount - Fusion
U2581	Rear Hub Carrier; 30mm wheel - R12 (pr)
U2743	Alloy Rear Hub Carrier - Fusion pr
U2767	Alloy Upper Wishbone - Fusion pr
U750	Ball Grippa Joints-Short Stud 8prs
U796	Turnbuckle Adjuster - 24mm (pr)
U798	Turnbuckle Adjuster - 45mm (pr)
U851	Ball Grippa Joints - Long Stud 8prs

SHOCK ABSORBERS

U1310	Shock Mouldings-Vari Click Piston (pr)
U1557	Ultra-Short Shock Rod (pr)
U1558	Purple Ultra-Short Shock Body (each)
U1559	Purple Ultra-Short Shock Absorbers (pr)
U1818	Purple Alloy Shock Seal Housing (pr)
U2024	Purple Ultra Short Shock Bodies - pk4
U2143	One Piece Shock Pistons - 4 sets of 3
U2222	C/F Upright Shock Mount; front - SST
U2292	Purple Alloy Threaded U/Sh Shock Body
U2293	Alloy Threaded Shock Collar
U2297	Threaded Shock Bodies & Collar-2prs
U613	Spring Stop & Spacer Mouldings (pr)
U835	Vari Shock Seal Pack (pr)

BEARINGS & BALLS

H1031	Bearing Blaster Aerosol 500ml
U1439	Ball Bearing - 5 x 9 x 3 Non Fl. (pr)
U2459	Diff Balls; T/C 2.5mm pk12
U2495	Ball Bearing - 5 x 9 x 3 Flanged (pr)
U2542	Diff Balls; 2.5mm Chrome Steel (pk 12)
U2698	Ball Bearing - 5 x 10 x 4 Sealed (pr)
U2699	Ball Bearing - 10 x 15 x 4 Sealed (pr)
U3019	Ceramic Nitride Diff Balls 2.5mm (pk12)
U730	Thrust Bearing

Schumacher

FUSION 28

4WD 1/10th Scale R/C Nitro Car

SPRINGS

U2822	Spring Tuning Set - Pro-Touring (6 prs)
U3245	Spring; Gold Ultra Short 25 (pr)

SHOCK OIL

G030	Pure Silicone Shock Oil - 30w
G035	Pure Silicone Shock Oil - 35w
G040	Pure Silicone Shock Oil - 40w
G045	Pure Silicone Shock Oil - 45w
G050	Pure Silicone Shock Oil - 50w
G055	Pure Silicone Shock Oil - 55w
G060	Pure Silicone Shock Oil - 60w
G070	Pure Silicone Shock Oil - 70w
G080	Pure Silicone Shock Oil - 80w
G100	Pure Silicone Shock Oil - 100w
G120	Pure Silicone Shock Oil - 120w

TRANSMISSION

U1248	Ball Bearing Set - Steering Post (2prs)
U1496	M3x10mm Button Screws+Washers(pk4)
U1635	Disc Brake Cam - Nitro 10/2000
U1636	Disc Brake Repair Set - Nitro
U1895	M3x8mm Button Screws & Washers pk4
U2150	Pin Axle & UJ - Plastic D/Shaft - SST
U2152	Wheel Hex ; pin axle - SST (pk 4)
U2153	Spacers & Pins - pin drive - SST (4 sets)
U2184	SPEED PACK - DiscSprings+DrivePins
U2408	Diff Washers - TT (pair)
U2449	Diff & Layshaft Mount Set - Mission
U2490	Moulding Set - 3 Speed Gears
U2543	Diff Rebuild Kit - Fusion
U2546	Layshaft Assembly - Fusion
U2547	Front & Rear Idler Shaft + Mount - Fusion
U2548	Idler Rollers - Fusion (pk2)
U2549	Layshaft Mounts; pair - Fusion
U2550	Spring;Shim & Pin Set - 3 Spd (8.5&10.5k)
U2552	Belt; 245t - Fusion
U2565	Diff Pulley & Fences - Fusion
U2588	C/F Disc Brake Repair Set
U2629	Pro-Diff Rebuild Kit
U2658	Steel Diff Output; male - Menace
U2659	Steel Diff Output; female - Menace
U3242	Driveshaft Bone; Plastic - non Blade Type pr

SPEED PACKS

U1545	SPEED PACK - M3 Cap Hd 16;20mm
U1547	SPEED PACK - M3 Nuts
U1548	SPEED PACK - M3 Washers
U1549	SPEED PACK - M4 Nuts & Washers
U1550	SPEED PACK - Socket Wrenches (pk3)
U1551	SPEED PACK - E Clips 2x8pcs
U1552	SPEED PACK - R Clips
U1633	SPEED PACK - Small Pins (pk)
U1700	SPEED PACK-M4x12 Csk Hi Tensile (4)
U1771	SPEED PACK - Tywraps (pk25)
U1960	SPEED PACK - O Rings; Various
U1962	SPEED PACK - O Rings3.3x2.4ID - pk6
U2128	SPEED PACK - Grub-Set Screws M3 M4
U2184	SPEED PACK - DiscSprings+DrivePins
U2589	SPEED PACK - Torx M3 x 8 Csk
U2590	SPEED PACK - Torx M3 x 10 Csk
U2591	SPEED PACK - Torx M3 x 12 Csk
U2631	SPEED PACK - Circlips Various 12 pcs
U2760	SPEED PACK - M3 Button Hd; 4 to 20
U2840	SPEED PACK - Body Washers (pk 12)
U2856	SPEED PACK - Sticky Cable Clips (pk10)
U2857	SPEED PACK - Small Cable Ties (pk25)
U3022	SPEED PACK - M3x8 Csk Allen Hi-T
U3168	SPEED PACK - M2.5 Screws (pk10)



NITRO POWER PARTS

G566	Fuel Tank 75cc - Fusion
G860	Roto Start Shaft - Sch X18 X28
H1016	Fuel Bottle - 250cc
U1119	Fuel Pipe - 1/2 metre
U1685	Crank Nut; Washer & Cone-21/28
U2554	Flywheel - 18/21
U2814	Air Filter; waterproof - 21 - 28 engines
U2839	Air Filter; Purple Alloy - 21 - 28 engines
U2848	Glow Plug - Super Cool - Hi Nitro
U2849	Glow Plug - Super Cool - Card 12 pcs
U2850	Air Filter Foams only - U2839/U2814
U2949	Air Filter (Kit Spec)
U3108	Pinion Bell Service Kit; Needle Bearing
U3235	Engine Mounts - Fusion 28
U3236	Clutchbell 24-28-32T - Fusion 28
U3237	Manifold - Fusion 28
U3238	Tuned Pipe - Fusion 28
U3239	Fixing Kit; Tuned Pipe - Fusion 28
U3266	Carb & Brake Links - Fusion 28
U7005	180 Deg Clutch Shoes & Spring

NITRO MOTORS & PARTS

G596	Cool Head - X28
G597	Picco Schumacher X28 Engine
G861	Roto Start Assembly - X28
PP1360	Wrist Pin Retainer - X28 (10Pcs)
PP1361	Wrist Pin - X28
PP1371	Cylinder/Piston - X28
PP1390	Connecting Rod - X28
PP2249	O-Ring; Carb Crankcase - X28 (2Pcs)
PP2269	O-Ring; Carb Base (2Pcs) - X28
PP2347	Head Insert; Turbo - X28
PP2348	Insert Head; Standard - X28
PP2448	Crankcase & Bearings - X28 (2448+3021+3150)
PP2461	Head Gasket; 0.1 - X28
PP2462	Head Gasket; 0.2 - X28
PP3160	SG Crank Shaft - X28
PP5	Glow Plug; Hot #5 - X28
PP5035	O-Ring; Back Plate - X28
PP5037	Carb Lock Pin - X28
PP5175	Back Plate; Roto Start - X28
PP5176	Roto Start Axle - X28
PP5TH	Glow Plug; Turbo Hot #5 - X28
PP6035	Fuel Inlet Fitting - X28
PP6070	O-Ring; Hi Speed Needle (2Pcs) - X28
PP6080	O-Ring; Lo Speed Needle (6Pcs) - X28
PP6119	Spring; Idle Screw - X28
PP6135	Screw; Carb Idle - X28
PP6175	Washer; Carb Fuel Fitting (2pcs) - X28
PP6186	M3x3 Screw - X28
PP6201	Needle; Hi Speed - X28
PP6223	Needle; Lo Speed - X28
PP6229	Slide - X28
PP6239	Carb Alum Body O-Ring/Venturi - X28
PP6291	Ball Joint; Carb - X28
PP6319	Venturi Carburettor - X28
PP6323	Silicone Rubber Bellows - X28
PP6337	Carburettor Complete; Plastic 9mm - X28
PP6465	Needle Support; Hi Speed - X28
PP7115	Manifold/Engine Silicone - X28
PP7145	Manifold/Engine Silicone - X28
PP8015	One Way Assembly - X28

SPEED SECRET - OPTION PARTS

S500	Colour Catalogue - 60 pages
U1572	Titanium Turnbuckle; purple - 39mm (pr)
U1576	Titanium Pivot Pin; purple - 25mm (pr)
U1577	Titanium Pivot Pin; purple - 29mm (pr)
U2053	Titanium Turnbuckle; purple - 25mm (pr)
U2075	Camber & Ride Height Gauges - C/C
U2100	Set Up Wheels;Camber&Toe In-SST
U2135	M4 Nyloc Wheel Nut - Purple Alloy (pk4)
U2163	Alloy Hub Carriers; pin axle - Fusion (pr)
U2187	M3 Nyloc Nut - Purple Alloy (pk8)
U2251	Kwik Klip; 1/8x1.0 & 2.0mm
U2298	Schumacher Pit Dude Car Stand
U2395	Ball Pins; High+Low;AlloyHubCarr-2prs
U2401	Purple Alloy Wheel Hex - Mi-2 (pr)
U2462	Alloy Diff Mount - Mission
U2464	Titanium Pivot Pin; purple - 57mm (pr)
U2465	Titanium Pivot Pin; purple - 45mm (pr)

SPEED SECRET - OPTION PARTS

U2541	Pro-Diff; assembled - Fusion/Menace
U2566	Titanium Turnbuckle - 45mm (pr)
U2626	Alloy Upper Suspension Mount - Fusion
U2780	Alloy Ratchet & Brake Hub - 3 Speed
U2810	M4 Nyloc Wheel Nut - Red Alloy (pk4)
U2811	M4 Nyloc Wheel Nut - Blue Alloy (pk4)
U2813	M4 Nyloc Wheel Nut - Gold Alloy (pk4)
U3265	Steel CV Drive Shafts - Fusion 28 (pr)
U2693	Axle - CV Joint (pr)
U2694	Cylinder; Screw & Pin - CV Joint (pr)

TEAM CLOTHING

G315	Pit Towel
G321L	Ski Jacket; Red/Black Embroidered-Lg
G321M	Ski Jacket; Red/Blk Embroidered-Med
G321S	Ski Jacket - Red/Black - small
G321X	Ski Jacket - Red/Black-XLarge
G321XL	Ski Jacket; Red/Black Embroidered-XL
G331L	T Blue - Large
G331M	T Blue - Medium
G331XL	T Blue - X-Large
G331XXL	T Blue - XX-Large
G332L	T White - Large
G332M	T White - Medium
G332S	T White - Small Man
G332XL	T White - X-Large
G332XXL	T White - XX-Large
G333L	Polo - Large
G333M	Polo - Medium
G333S	Polo - Small Man
G333XL	Polo X Large
G333XXL	Polo - XX-Large
G334	Cap - Black; Meduim 58cm
G335	Cap - Black; Large 62cm
G336L	Sweat - Large
G336M	Sweat - Medium
G336S	Sweat - Small
G336XL	Sweat - X-Large
G336XXL	Sweat - XX-Large

ELECTRONICS

G837	Mini Temp Gun - 420F 230C
H1033	Micro Failsafe; waterproof

BATTERIES

G718	GP Alkaline AA Pencell; Pack 4
G727	1000NiMh - 6.0v Rx Hump

TOOLS

AT1142	ATS Set Up Gauges - 1/10th Touring
H1009	Lexan Scissors; curved
H1025	4 Way Glow Plug Wrench
H1030	Nitro Cleaner Aerosol 500ml
H1032	Alloy Camber Gauge - 1/10th
HW002	Wiha Precision Hex Driver - 1.5mm
HW003	Wiha Precision Hex Driver - 2.0mm
HW004	Wiha Precision Hex Driver - 2.5mm
HW005	Wiha Precision Pozi Screw Driver
HW006	Wiha Precision Nut Driver - M3
HW007	Wiha Precision Nut Driver - M4
HW008	Wiha Torx Driver - T10
HW009	Wiha Torx Driver - T20
HW010	Circlip Pliers; Internal
PYS1010	Alloy Grip Wrench Set; 1.5;2.0;2.5;3.0mm.
PYS1020	Alloy Grip Wrench Set; .05;1/16;5/64;3/32
PYS1042	Alloy Grip Long Mixture Driver
U2789	Schumacher Hex Driver - 1.5mm
U2790	Schumacher Hex Driver - 2.0mm
U2791	Schumacher Hex Driver - 2.5mm
U2792	Schumacher Hex Driver - 3.0mm
U2794	Schumacher Driver - T10 TORX
U2795	Schumacher M3 Nut Driver
U2796	Schumacher M4 Nut Driver
U2818	Schumacher Body Reamer

TRIX TOOLS

Precision tools manufactured exclusively for Schumacher Racing



Hex Driver - 1.5mm
U2789

Hex Driver - 2.0mm
U2790

Hex Driver - 2.5mm
U2791

Hex Driver - 3.0mm
U2792

Torx Driver - T10
U2794

M3 Nut Driver
U2795

M4 Nut Driver
U2796

Body Reamer
U2818

4 Way Glow Plug Spanner
H1025
7mm, 8mm, 10mm and 12mm across flats.



Schumacher

FUSION 28

4WD 1/10th Scale R/C Nitro Car



Mini Temp Gun
G837
Ideal for measuring tyre, track and engine head temperature.



H1017 500cc Fuel Bottle
H1016 250cc Fuel Bottle
Blue Alloy pipe with stopper!



Purple Alloy Droop Gauge
H1027
3 Piece Set
Complete with Case



Purple Alloy Camber Gauge
H1032

Purple Alloy Ride Height Gauge
H1026



Piper X Air Filter Oil
H1037

Piper X
Air Filter Cleaner
H1038





Bearing Blaster 500ml
H1031

Nitro Cleaner 500ml
H1030

Mains & 12volt
"AA" & "AAA" Charger.
Charges 8 Cells
G849





GP "AA" Pencell
2700 NiMh (pk4)
G721



Hump 1200mah, 6 volt
RX pack (3x2)
G729
Includes Plug & Lead



Flat 1200mah, 6 volt
RX pack (5x1)
G728
Includes Plug & Lead



Curved Body Scissors
H1009
Designed for cutting out polycarbonate bodies.



ZX1 ExtraLube
G200
The Ultimate Friction Eliminator.

G020 ~ 10 weight (thin)
G025 ~ 15 weight
G020 ~ 20 weight
G025 ~ 25 weight
G030 ~ 30 weight
G035 ~ 35 weight
G040 ~ 40 weight
G045 ~ 45 weight
G050 ~ 50 weight
G055 ~ 55 weight
G060 ~ 60 weight
G070 ~ 70 weight
G080 ~ 80 weight
G100 ~ 100 weight
G120 ~ 120 weight (thick)



The best silicone shock oil you can buy!!