FUSION R12

Assembly & Maintenance Manual

Schumacher

racing-cars.com

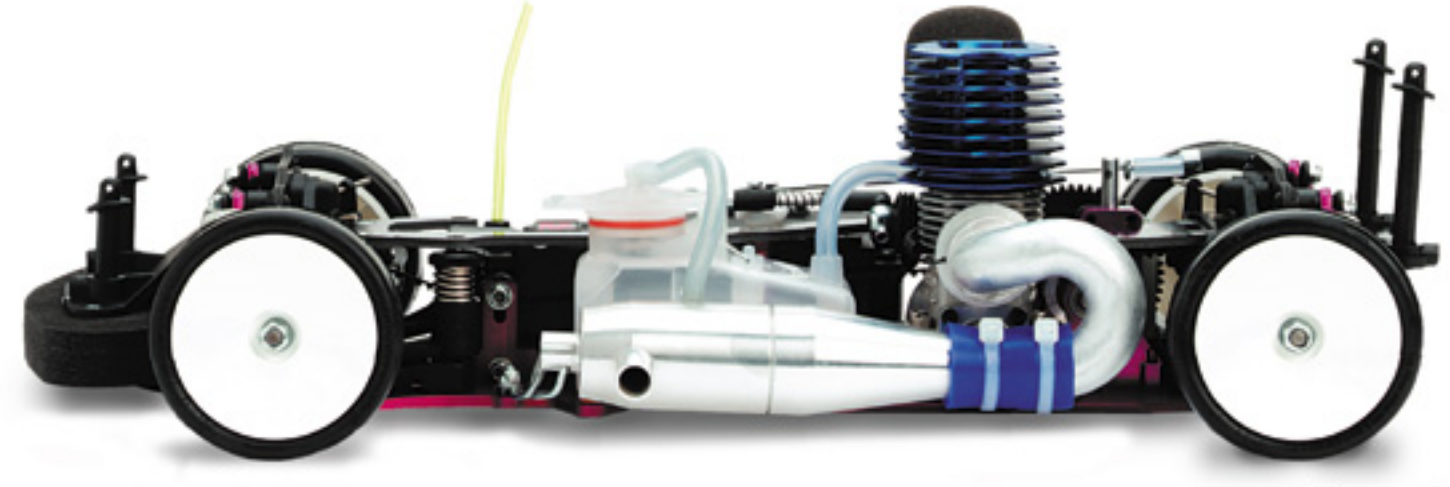

S1054

In line with our policy of continous development the exact specification of the kit may vary.
In the unlikely event of any problems with your kit please contact the model shop where you purchased it.

Schumacher

FUSION R12

IMPORTANT SAFETY NOTES

1. This product is not suitable for children under 14 years of age unless supervised by an adult.
2. Select an area for assembly that is away from reach of small children. The parts are small and can be swallowed by children causing choking and possible internal injuries.
3. Shock fluids, grease and adhesives should be kept out of children's reach. They are not toxic, but were not intended for human consumption.
4. Exercise care when using any hand tools, sharp instruments and power tools during construction.
5. Carefully read all manufacturers warnings and cautions for any glues or paints that may be used for assembly purposes.

Do not use excessive force when tightening the self-tapping screws, or you may strip the thread in the plastic. It is recommended to stop tightening it when the threaded part on the screw goes into the plastic part and you feel some resistance from the tightening. Screws can be made easier to tighten if a drop of oil is used.

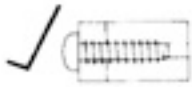

Good

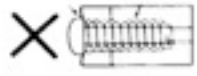

Over tighten and may strip the thread in the plastic

ADDITIONAL ITEMS REQUIRED



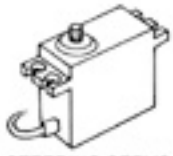

STEERING SERVO

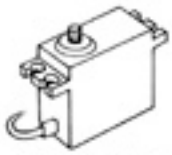

THROTTLE SERVO

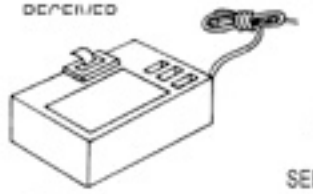



SEE WARNING SHEET



GLOW START



"AA" CELLS
(FOR RADIO CONTROL)



POLYCARBONATE SPRAY PAINT FOR BODYSHELL

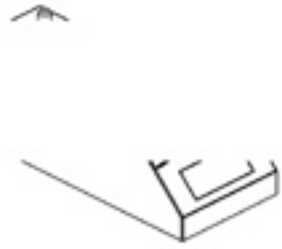

STARTER BOX

FOR BEST PERFORMANCE, IT IS VERY IMPORTANT THAT GREAT CARE IS TAKEN TO ENSURE THE FREE MOVEMENT OF ALL PARTS.



NUT DRIVERS 5.5mm & 7mm

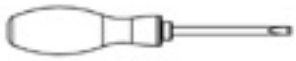

FLAT BLADED &
PHILIPS SCREWDRIVER



7/16" & 5.5mm AF SPANNER



SCAPEL

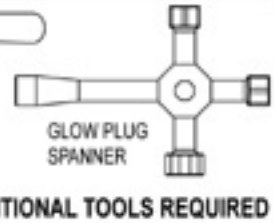

GLOW PLUG
SPANNER



PLIERS



FILE

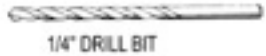

1/4" DRILL BIT

ADDITIONAL TOOLS REQUIRED

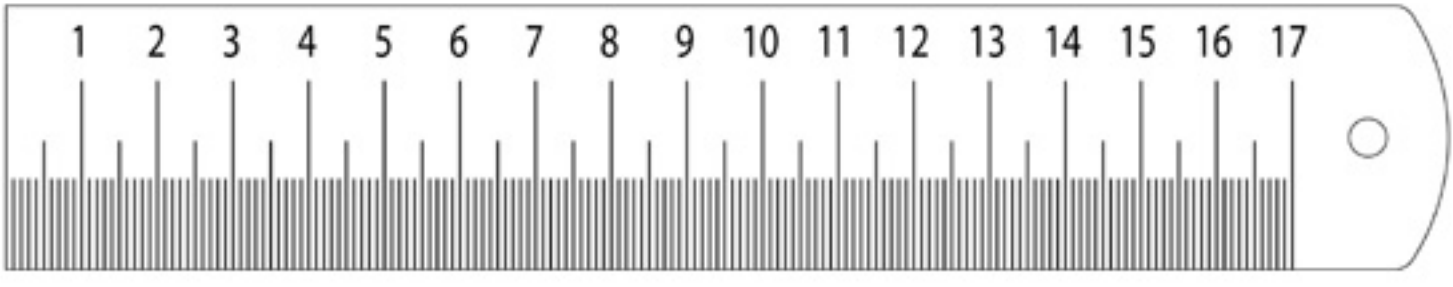

Schumacher

FUSION R12

1 Lever Arm

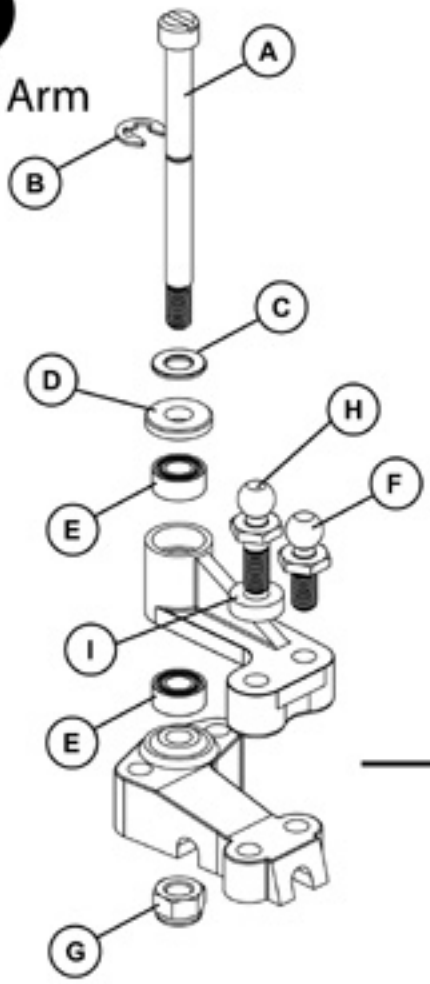

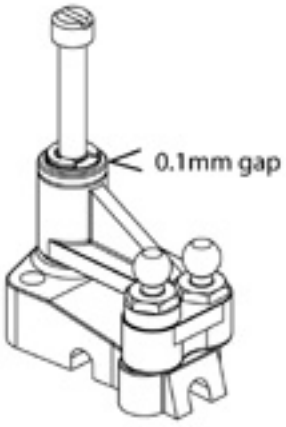

Assembly 1

2 Saver Arm

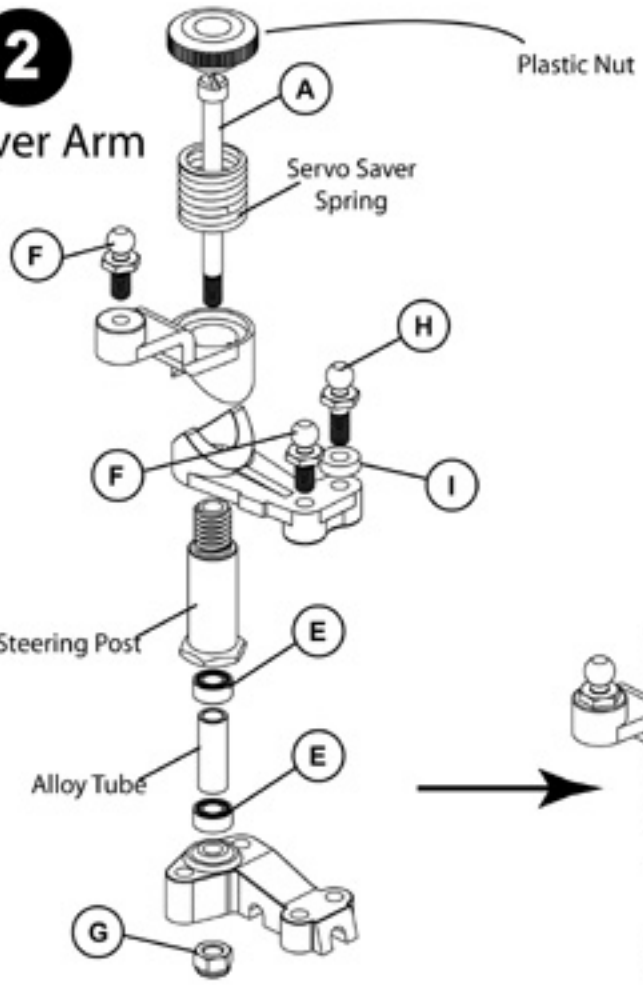

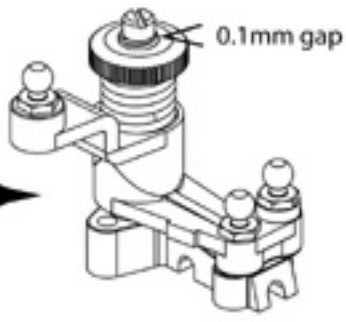

Assembly 2

STEERING ASSEMBLY
Parts required:

- A — Steering Post Long x 2
- B — "E" Clip x 1
- C — M3 Steel Washer x 1
- D — Stepped Washer x 1
- E — 1/8" x 1/4" Ball Race x 4
- F — Ball Stud Short M3 x 3
- G — M3 Nyloc Nut x 2
- H — Ball Stud Long M3 x 2
- I — 2mm Spacer x 2

TRACK TIP 01

Ensure that the steering posts rotate freely.

Schumacher

FUSION R12

3 Centre Track Rod

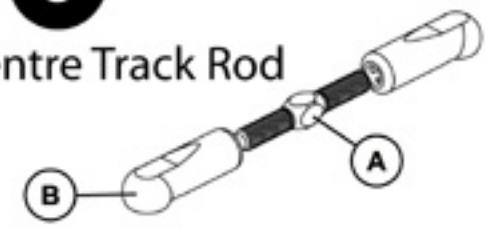

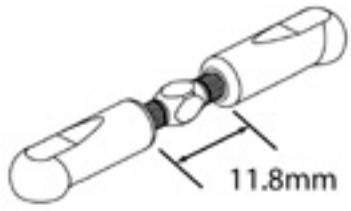

Assembly 3

STEERING ASSEMBLY
Continued

A — Ball Socket x 2

B — Turnbuckle 24mm x 1

4 Steering Link Completion

Assembly 2

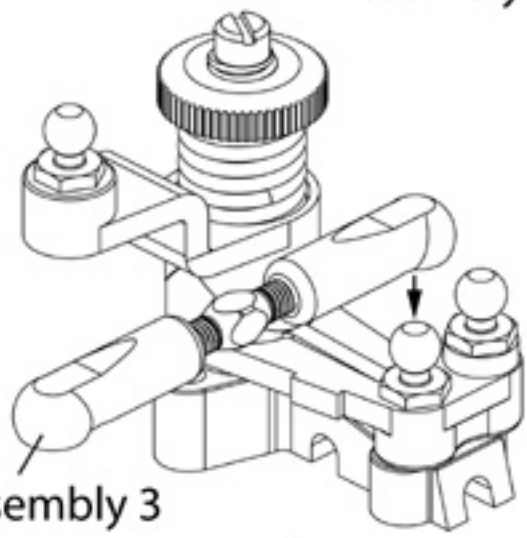

Assembly 3

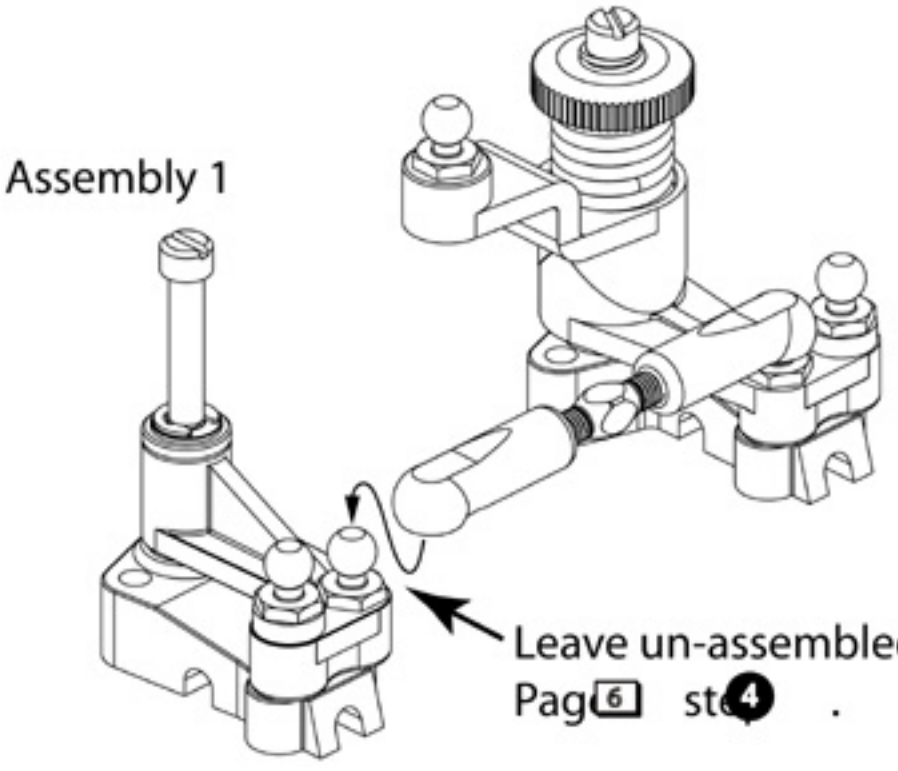

Assembly 1

Leave un-assembled until fitting to car
Page 6 step 4 .

Schumacher

fusion R12

1

USE a scalpel to cut away from sprue.

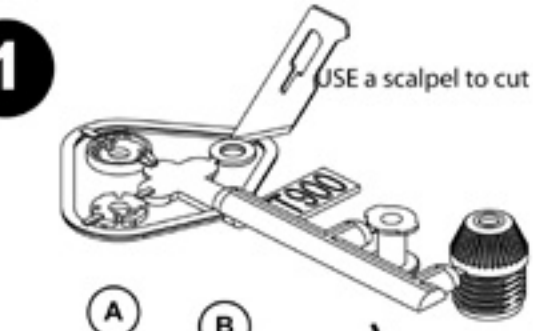

N.B.
Assemble 4 units.

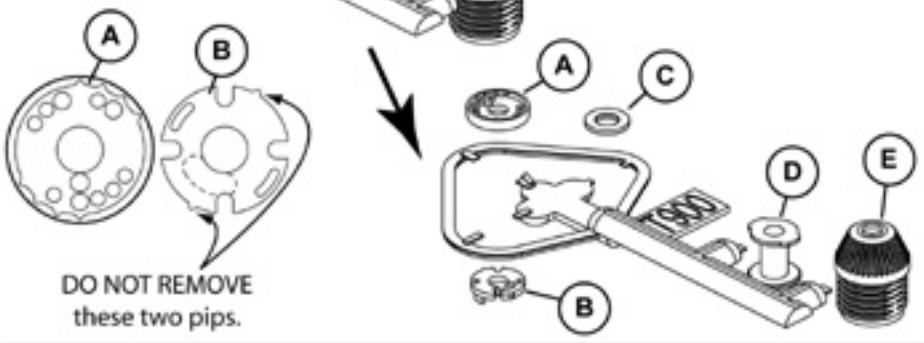

2

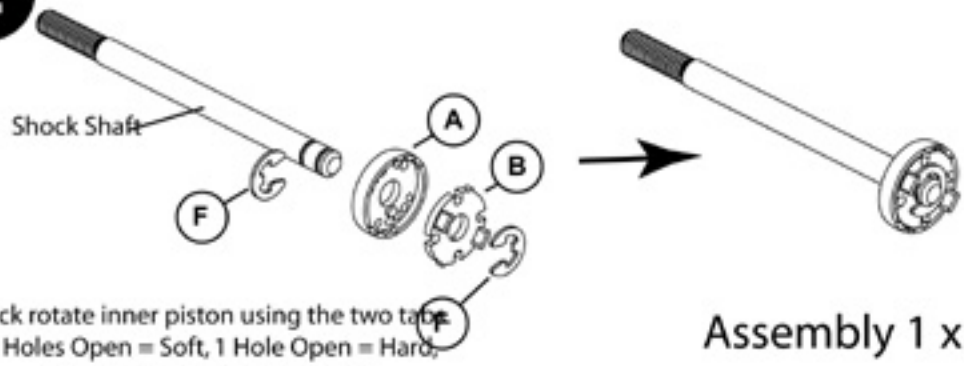

Click rotate inner piston using the two tabs.
4 Holes Open = Soft, 1 Hole Open = Hard.
(Standard setting = 2 Holes)

Assembly 1 x 4

3

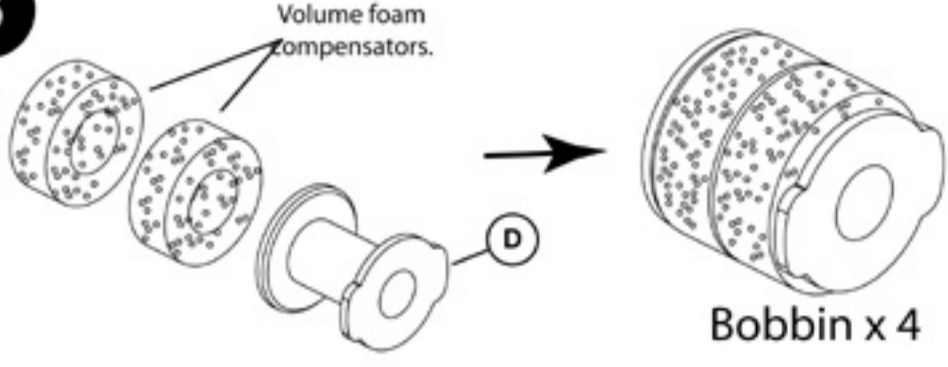

Bobbin x 4

4

Push bobbin into (E) until lugs click into groove.

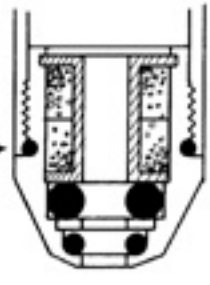

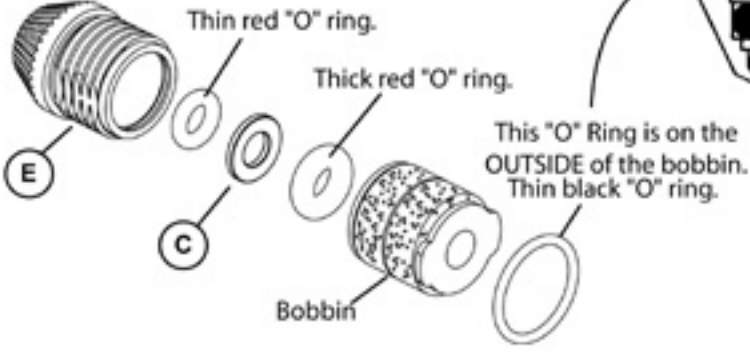



Assembly 2 x 4

SHOCK ASSEMBLY
Parts required:

- (A) Outer Piston x 4
- (B) Inner Piston x 4
- (C) Spacer x 4
- (D) Bobbin x 4
- (E) Seal Housing x 4
- (F) "E" clip x 8

TRACK TIP 02

Soak the volume foam compensators in shock oil before assembly, this will help with air free shocks!

Schumacher

FUSION R12

5



SHOCK ASSEMBLY
Parts required:

(A) 
Ball Socket x 4

TRACK TIP 03
Ensure the shocks are all the same length!

6

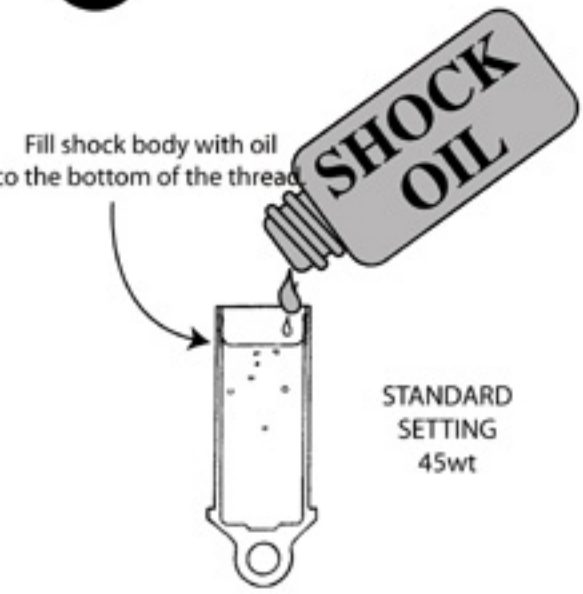

Make 4

7

Position assembly as shown and carefully screw into the shock body. (some oil will spill from the body, clean with tissue)

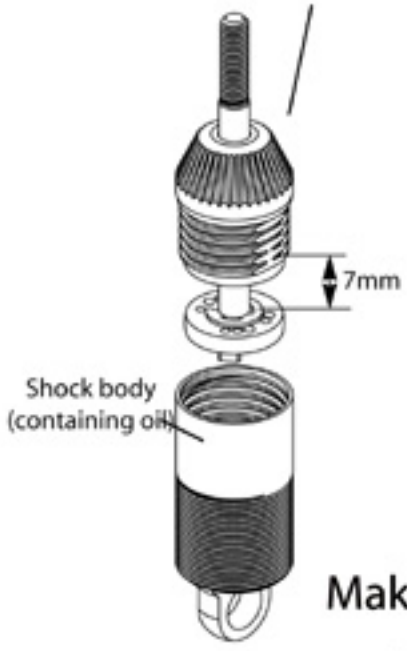

Make 4

8

Note: When housing is assembled correctly there is no black "O" ring showing.

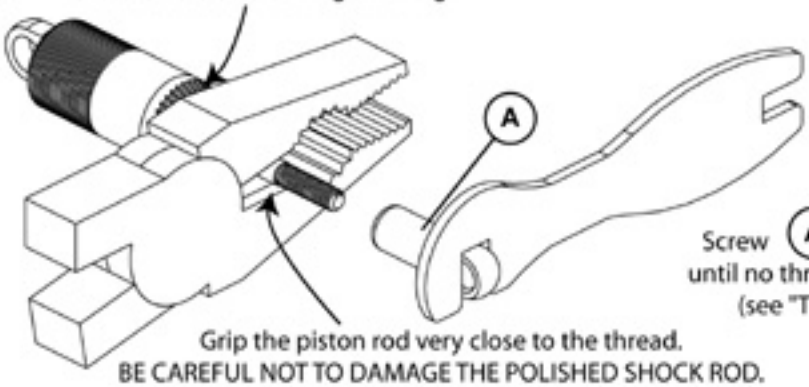

9

Assemble the "O" ring into the groove.



10

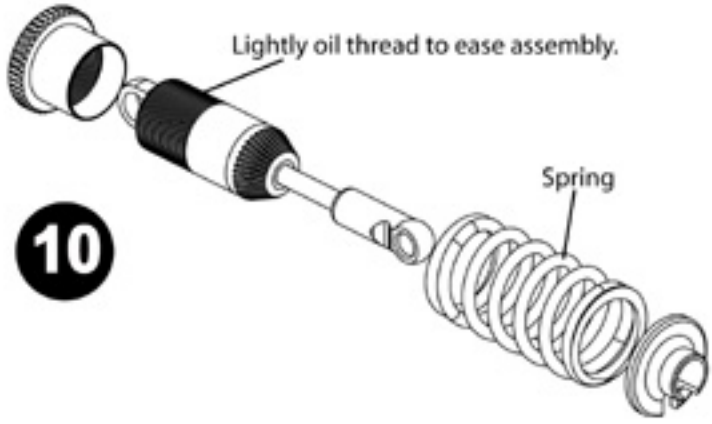

Schumacher

FUSION R12

1

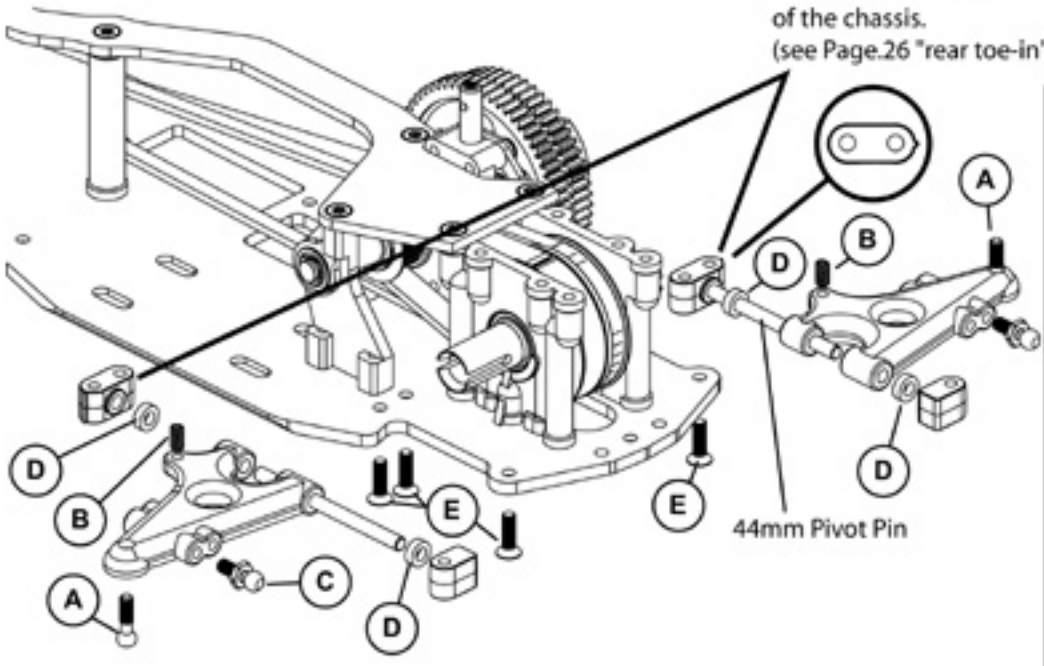

BAG 1 ASSEMBLY
Parts required:

- (A) Allen Ball Stud M3 x 2
- (B) N.B. Use to set & adjust droop (see page 34) M3 x 6 Grub Screw x 2
- (C) Ball Stud Short M3 x 2
- (D) 2mm x 1/8" spacer x 4
- (E) M3 x 12 Csk Head TORX® x 6

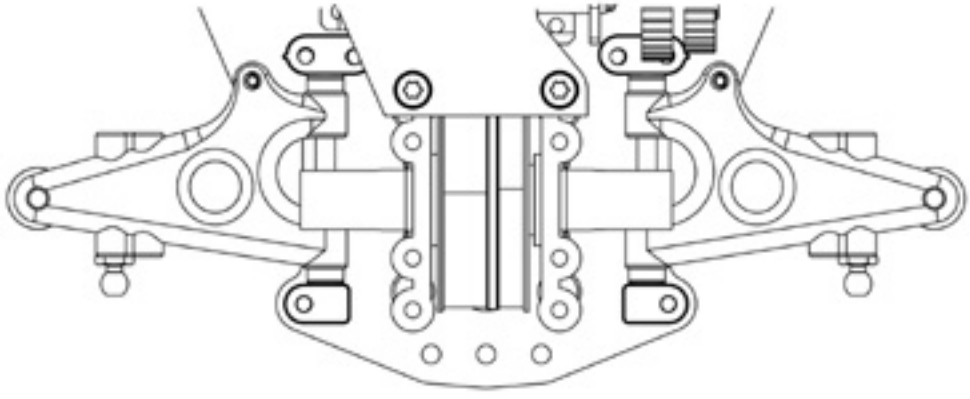

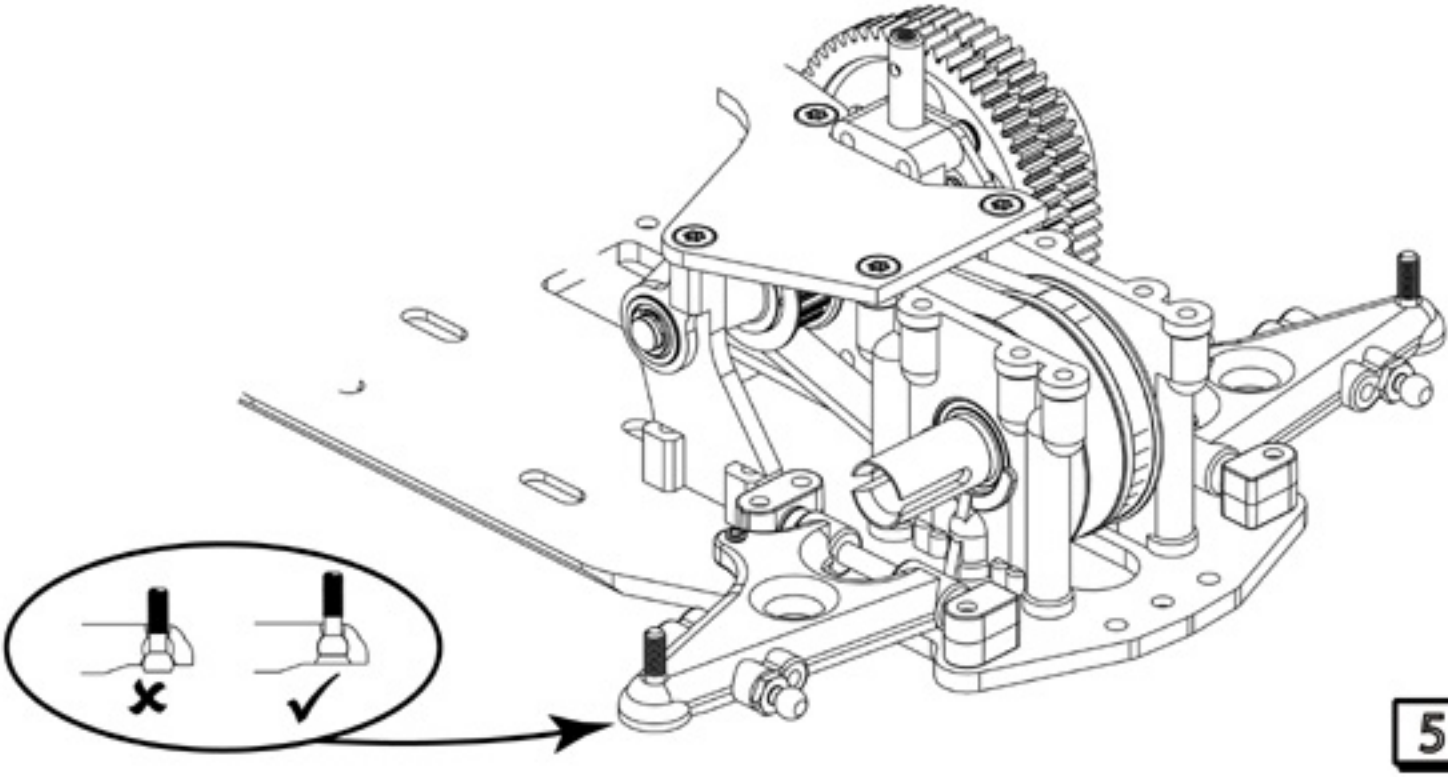

Schumacher

FUSION R12

BAG 2 ASSEMBLY

Parts required:

- (A) M3 x 10 Csk Head TORX® x 5
- (B) M3 x 12 Csk Head TORX® x 2
- (C) M3 x 8 Csk Head TORX® x 4

1

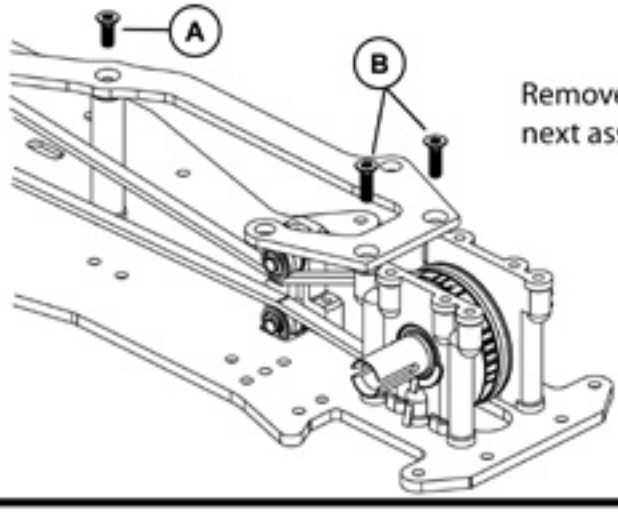

Remove screws for next assembly step.

2

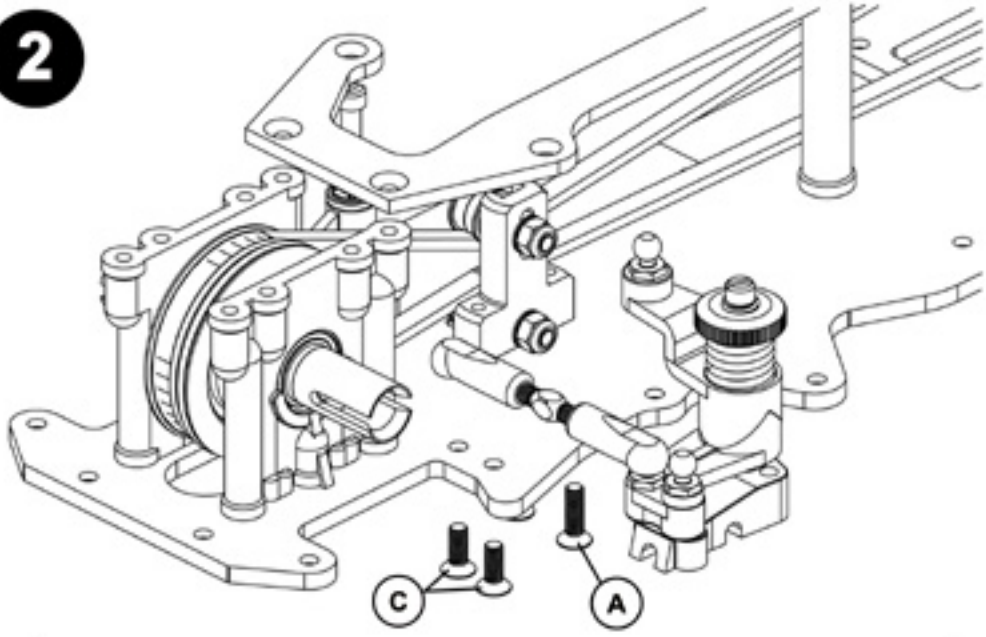

3

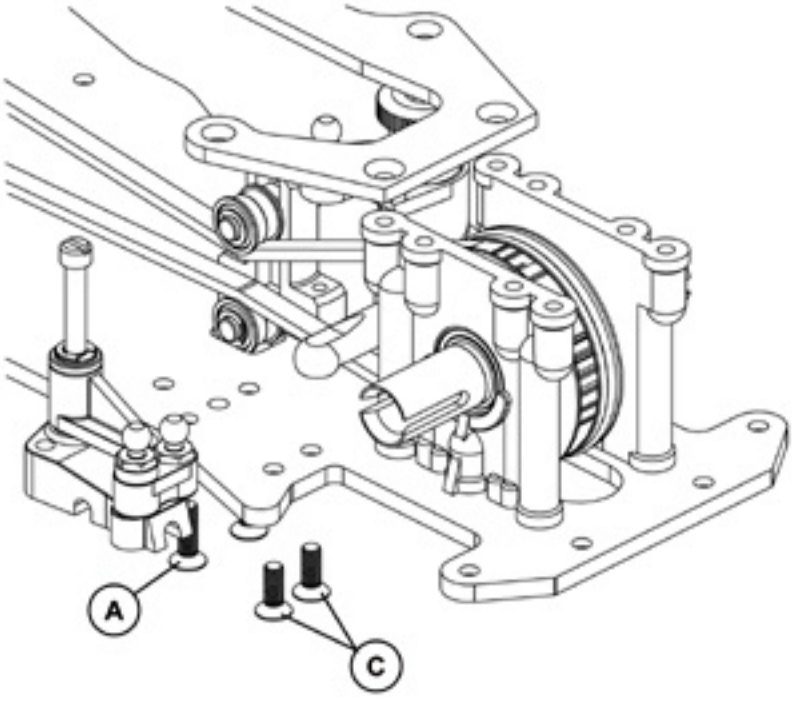

4

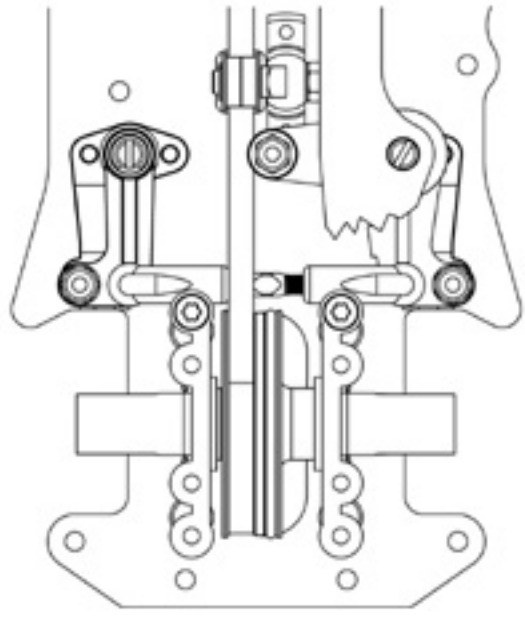

Schumacher

FUSION R12

5

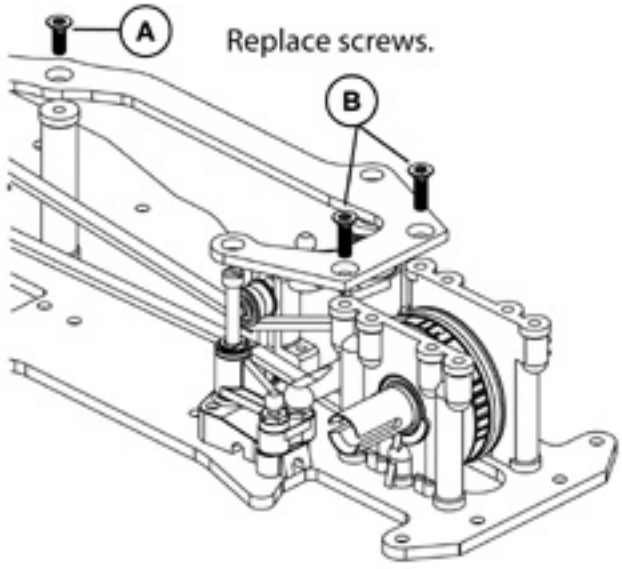

6

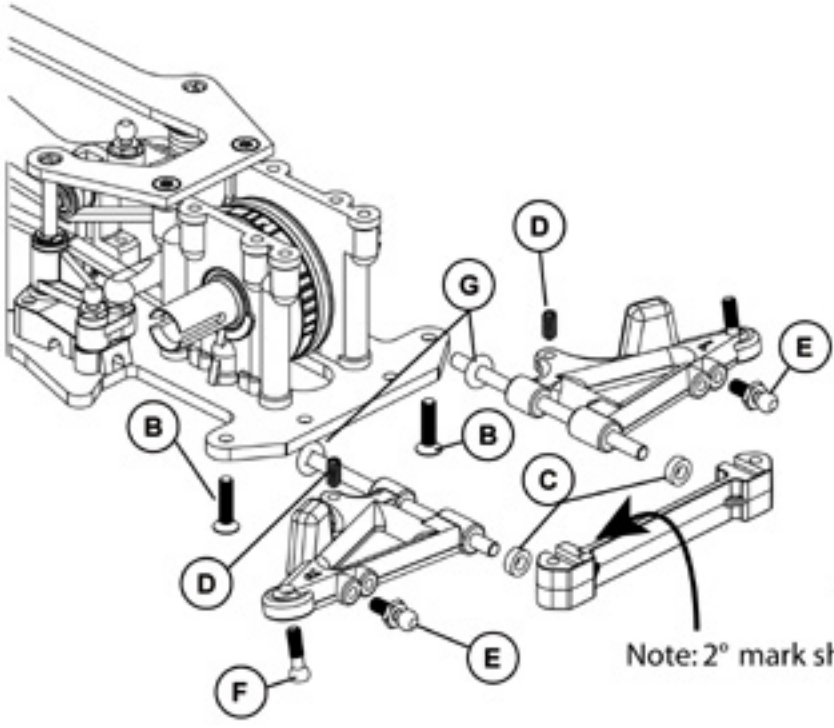

Note: 2° mark shown on top.

BAG 2 ASSEMBLY
Parts required:

- (A) M3 x 10 Csk Head TORX® x 1
- (B) M3 x 12 Csk Head TORX® x 4
- (C) 2mm x 1/8th Spacer x 2
  N.B. Use to set & adjust droop (see page 34).
- (D) M3 x 6 Grub Screw x 2
- (E) Ball Stud Short M3 x 2
- (F) Allen Ball Stud M3 x 2
- (G) Fat red "O" ring x 2

7

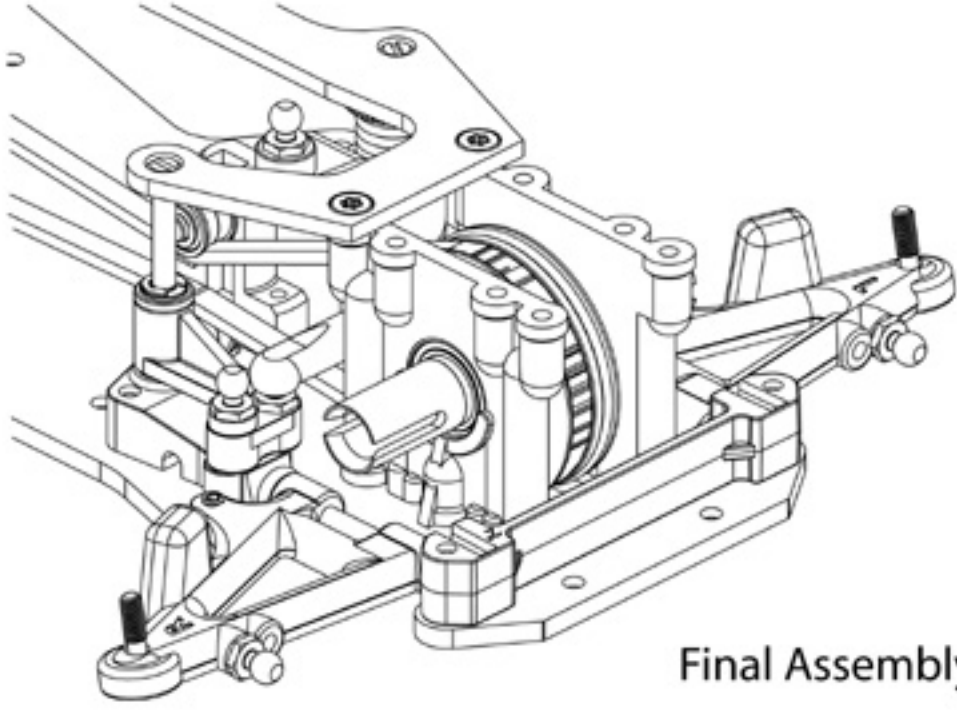

Final Assembly

Schumacher

FUSION R12

BAG 3 ASSEMBLY
Parts required:

A "E" Clip x 7

B 2mm x 1/8th Spacer x 4

1

Front

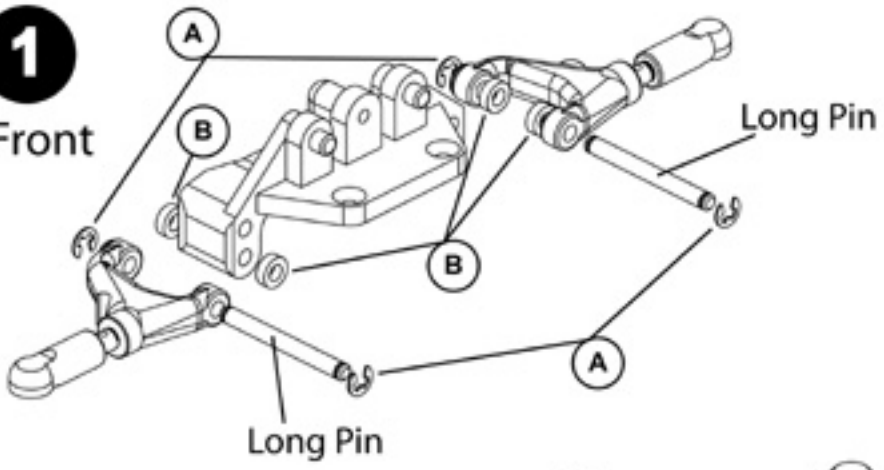

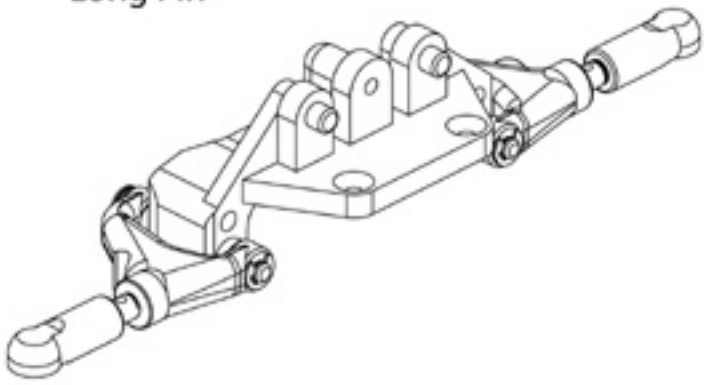

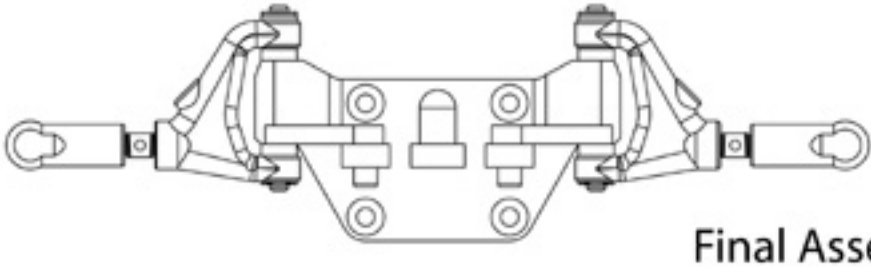

Final Assembly

2

Rear

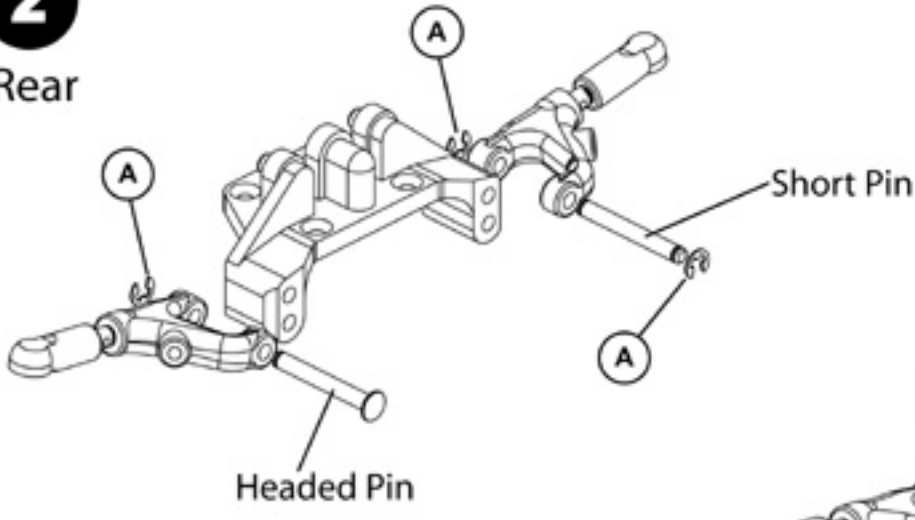

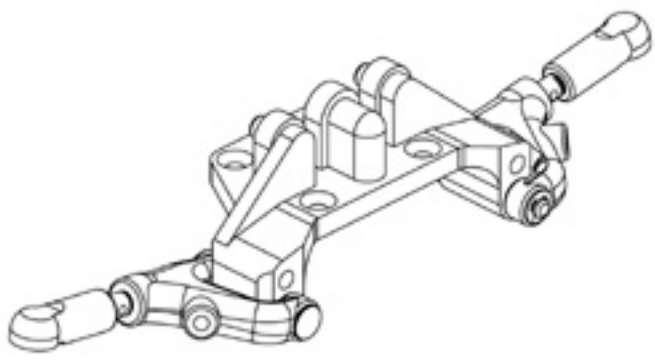

Final Assembly

Schumacher

FUSION R12

3

BAG 3 ASSEMBLY
Parts required:

A — M3 x 12 Csk Head TORX® x 8

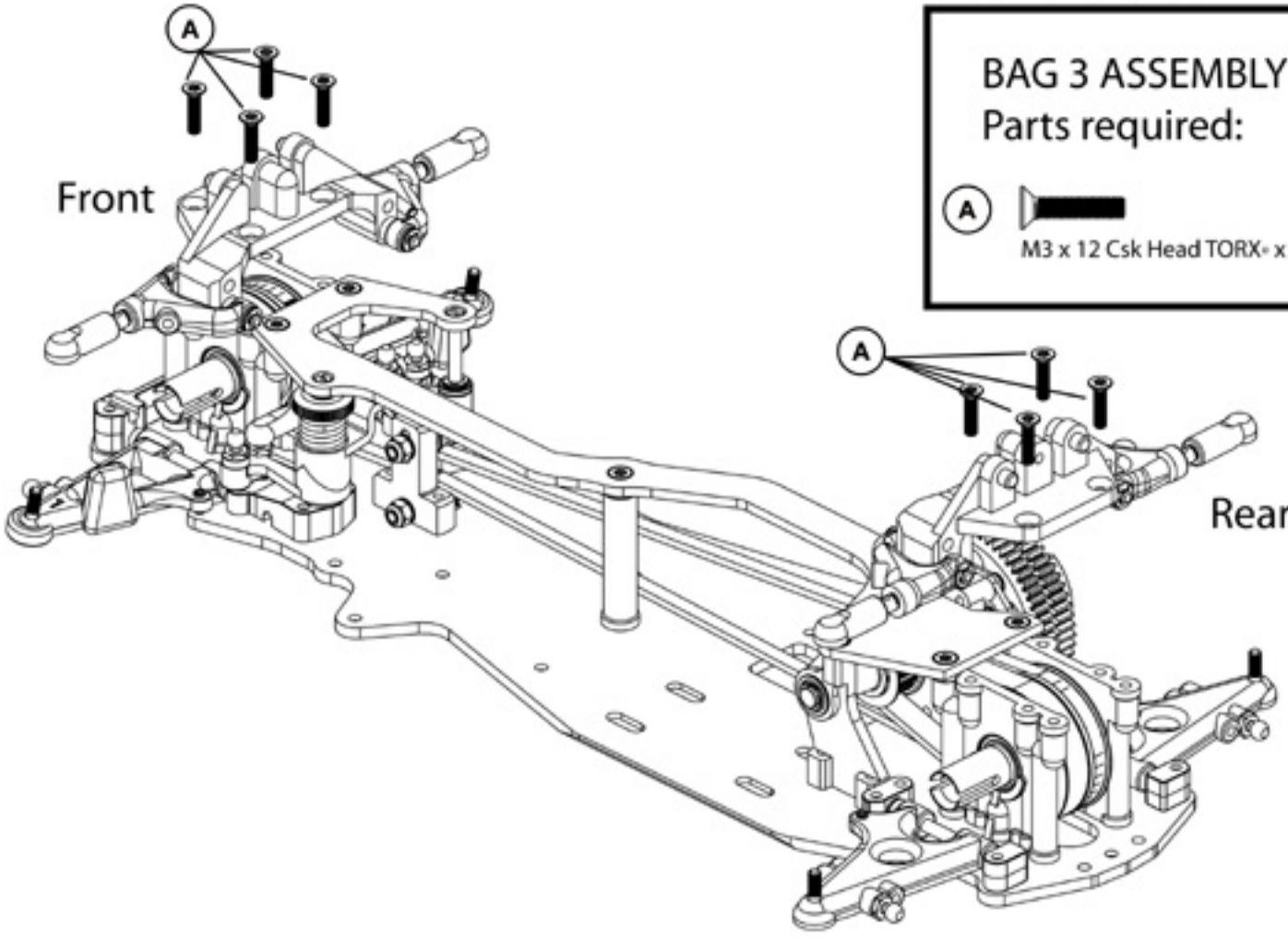

4

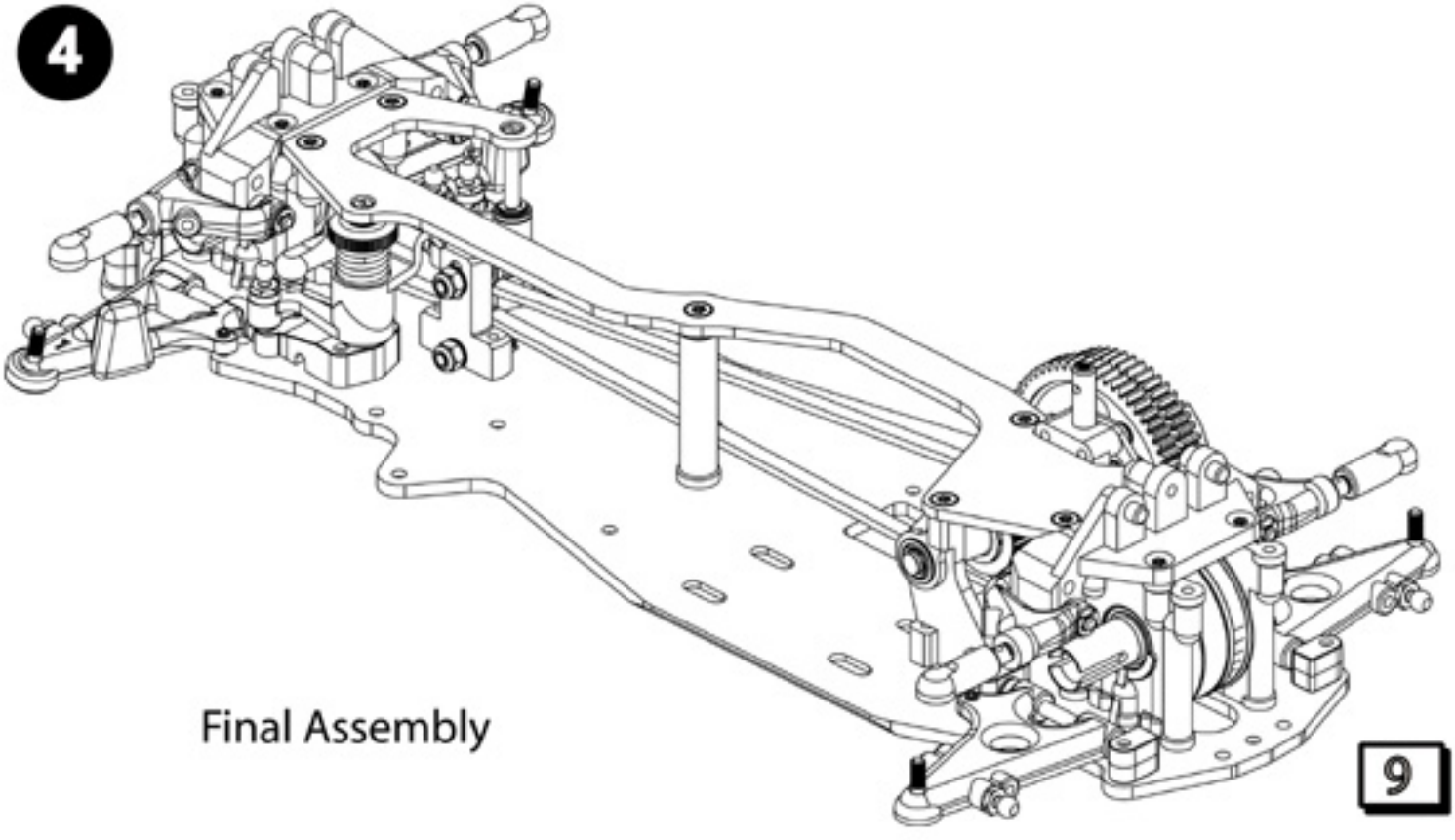

Final Assembly

Schumacher

FUSION R12

BAG 4 ASSEMBLY
Parts required:

A — Ball Stud Short x 8

B — Thick Axle Spacer x 4

C — 5mm x 10mm x 4mm Ballrace x 8

NOTE: Thick armed hub carriers are fitted on the front & thin armed on the rear.

1 Front Left

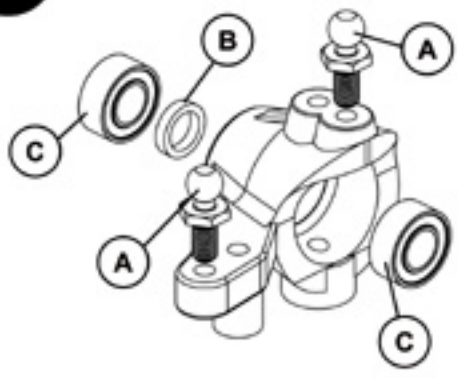



Assembly 1

2 Front Right





Assembly 2

3 Rear Left

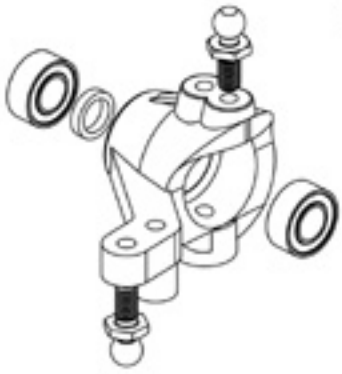



Assembly 3

4 Rear Right

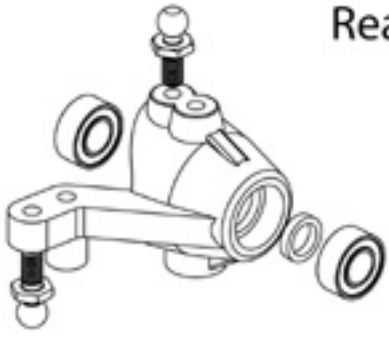

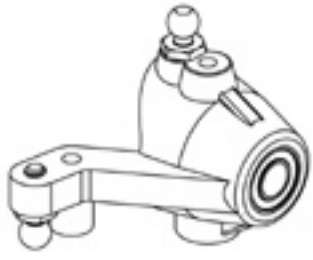

Assembly 4

Schumacher

FUSION R12

5

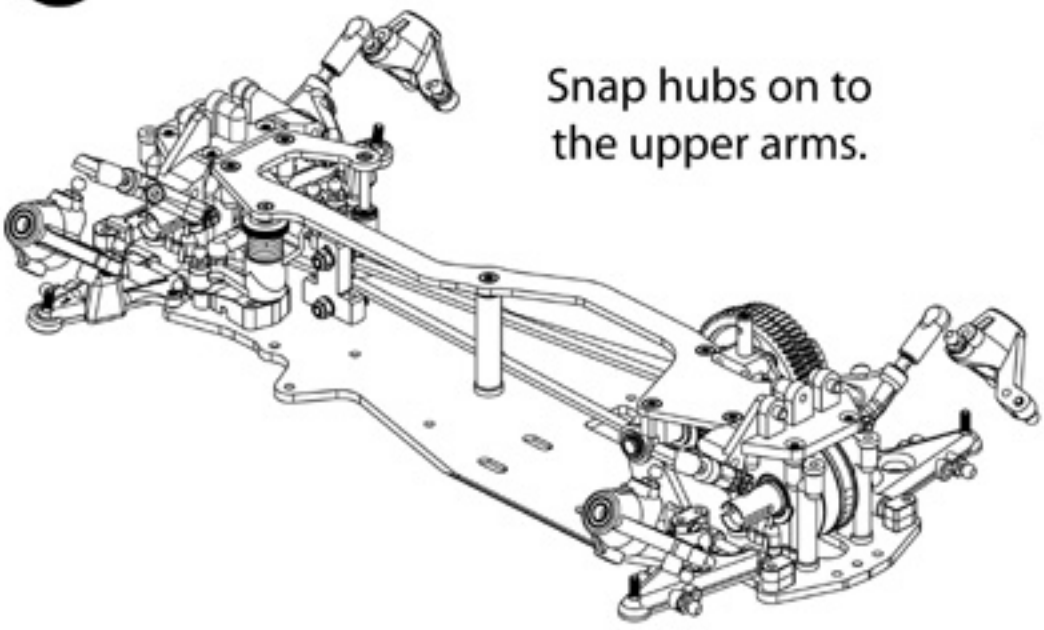

Snap hubs on to the upper arms.

BAG 4 ASSEMBLY

Parts required:

- (A) Ball Stud Long x 2
- (B) M3 x 12 Csk Head TORX® x 1
- (C) Black 2mm spacer x 2

TRACK TIP 04

Ensure the suspension arms can fall under their own weight.

6

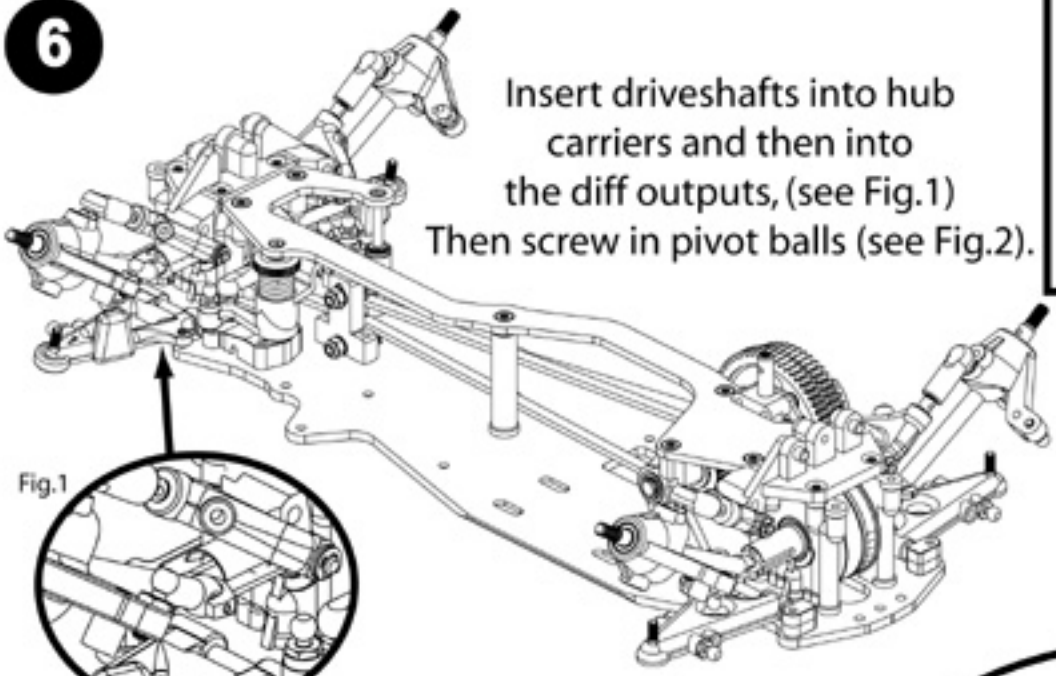

Insert driveshafts into hub carriers and then into the diff outputs, (see Fig.1) Then screw in pivot balls (see Fig.2).

Fig.1

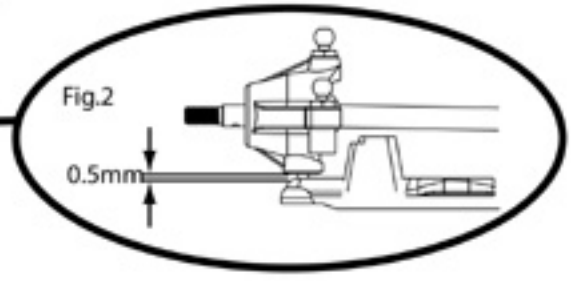

Fig.2

7

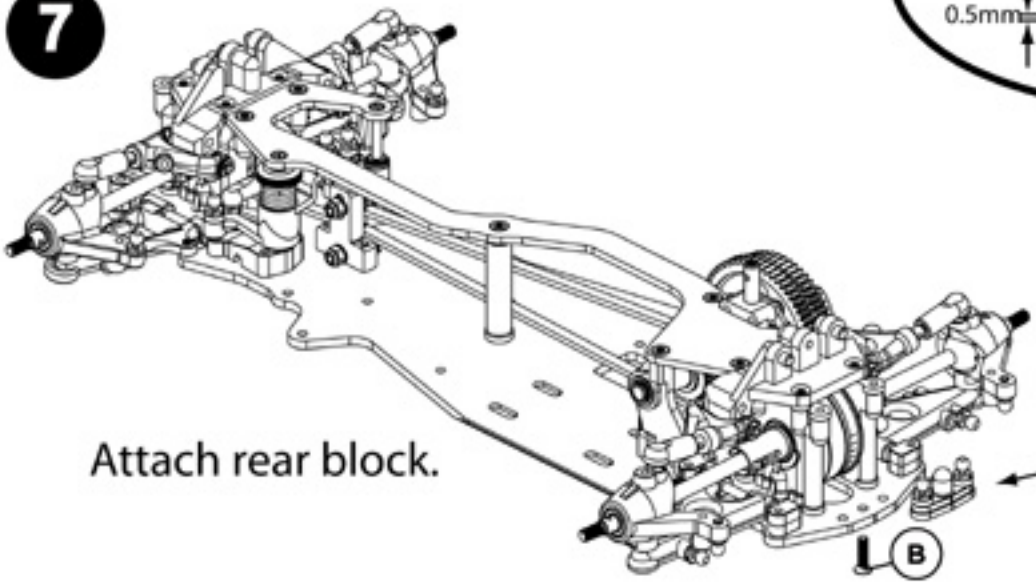

Attach rear block.

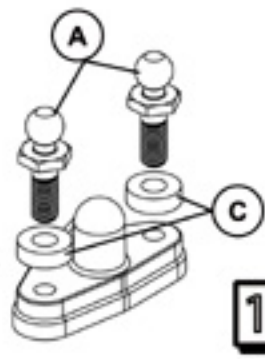

Schumacher

FUSION R12

BAG 4 ASSEMBLY

Parts required:

- A — Ball Socket x 8
- B — 24mm Turnbuckle x 2
- C — 39mm Turnbuckle x 2
- D — Small Red "O" Ring x 4

8

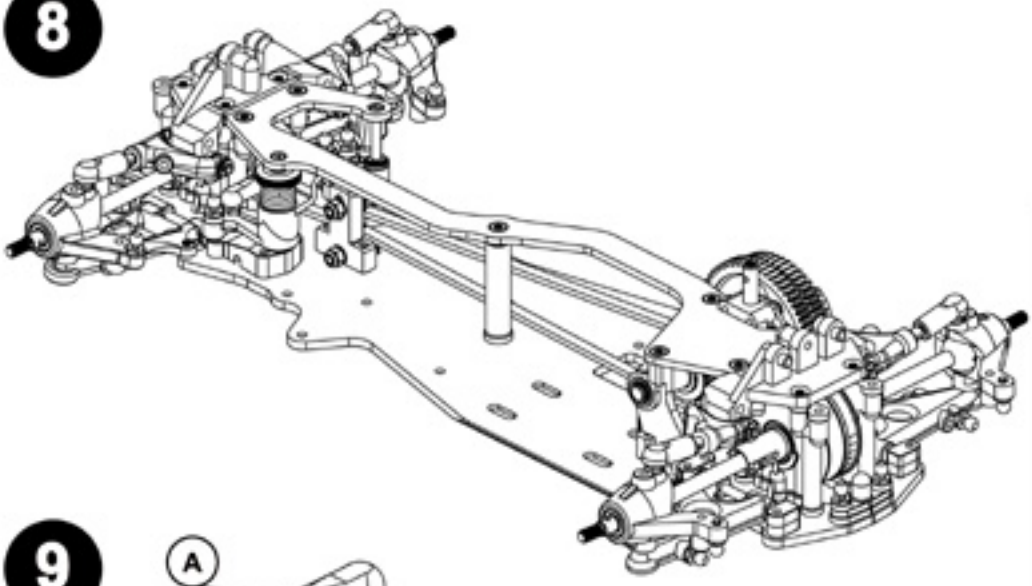

9

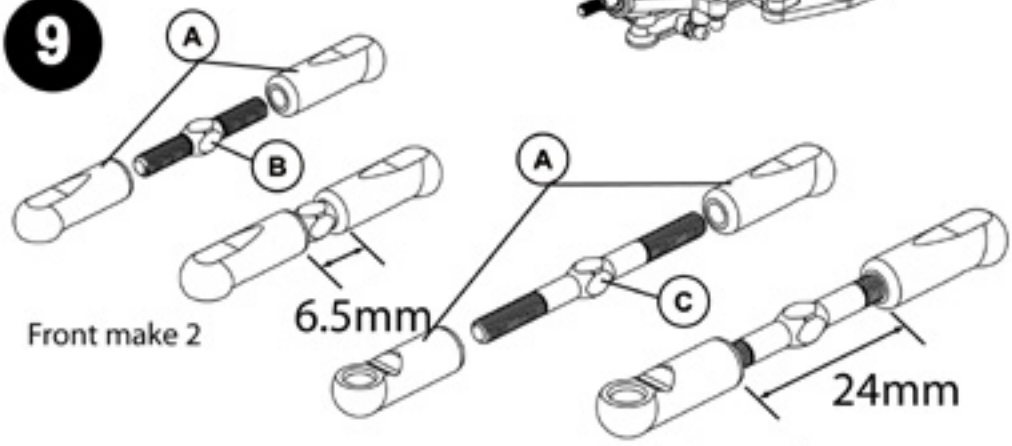

10

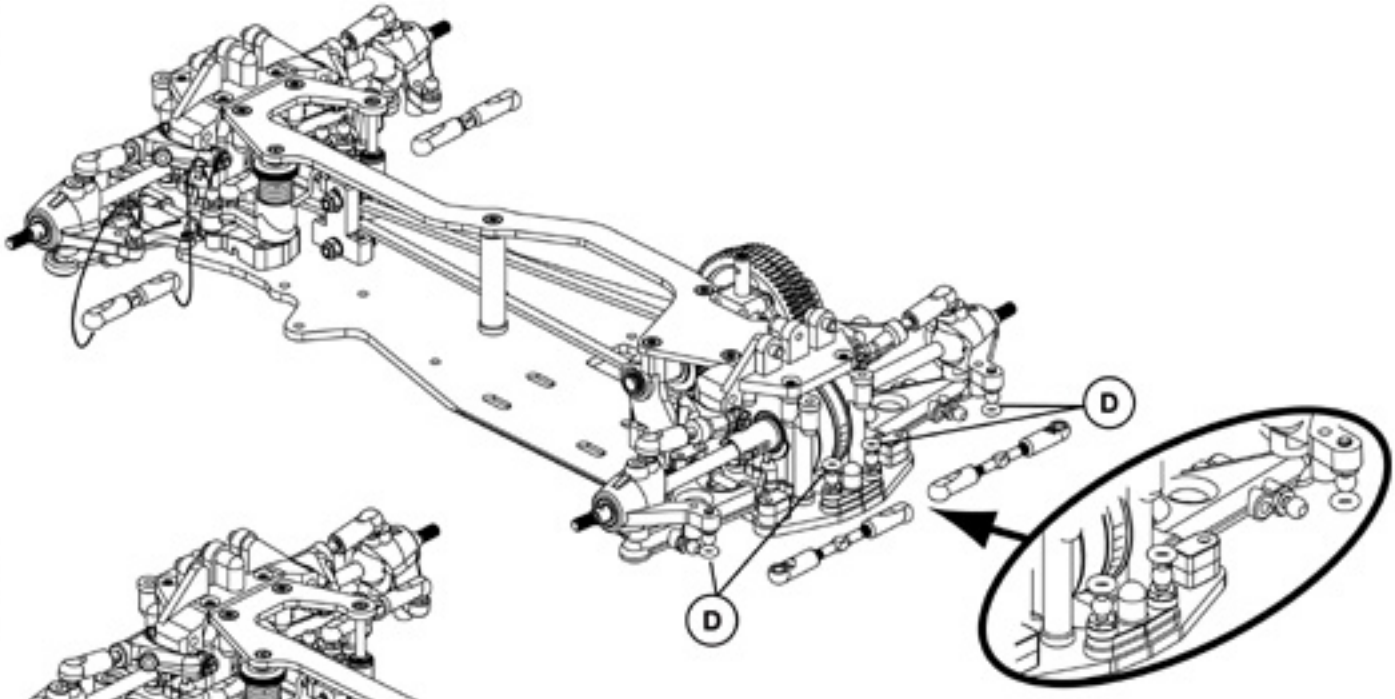

11

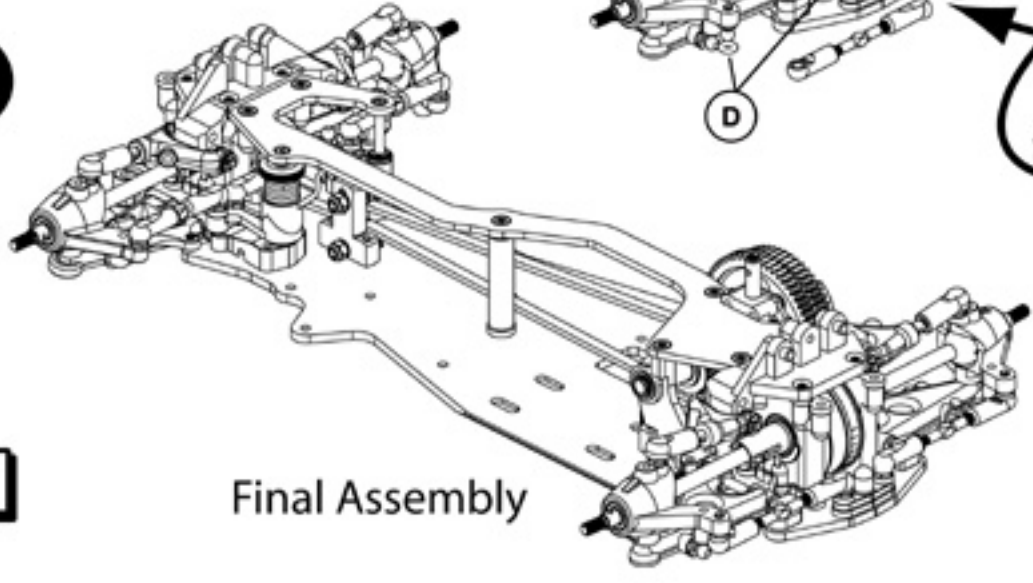

12

Final Assembly

Schumacher

fusion R12

BAG 5 ASSEMBLY

- (A) M3 x 8 Button Head x 4
- (B) M3 x x12 Csk Head TORX® x 2
- (C) M3 x 20 Button Head x 2
- (D) M3 Nut x 4
- (E) M3 Nyloc Nut x 2
- (F) Shock Mount Bush x 2
- (G) Shock Mount Collar x 2
- (H) Shock Mount Washer x 2

TRACK TIP 05

Don't over tighten the shock fixings (E) or the anti-roll bar screws (A). They must be allowed to pivot freely as the suspension moves.

NOTE:
Front & Rear mounts are different.

1

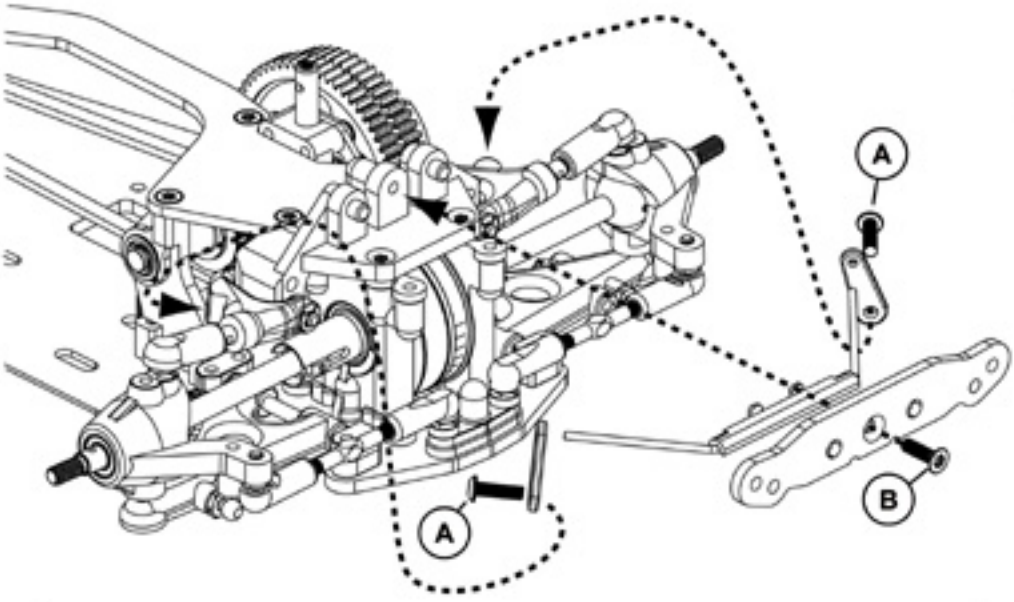

2

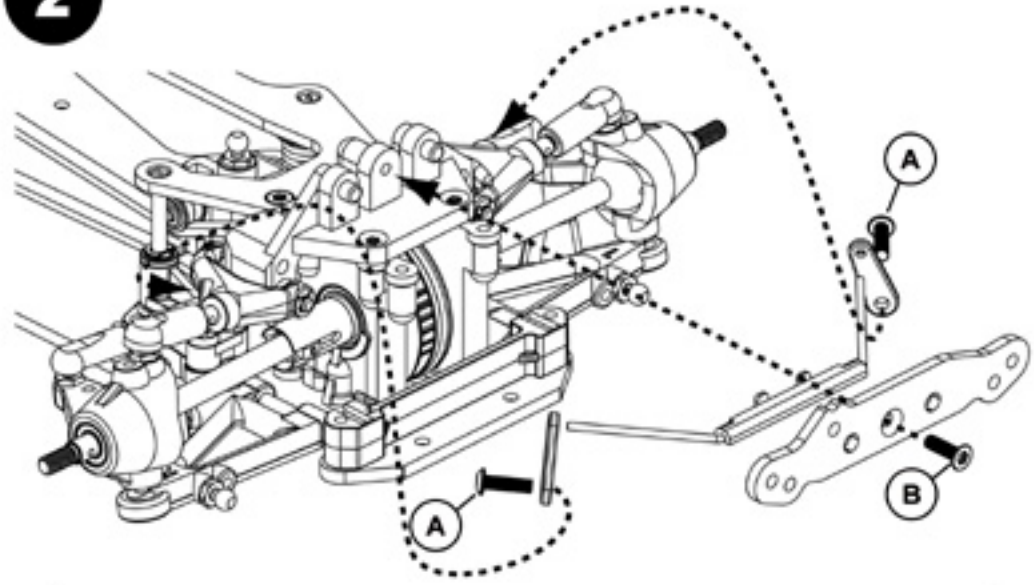

3

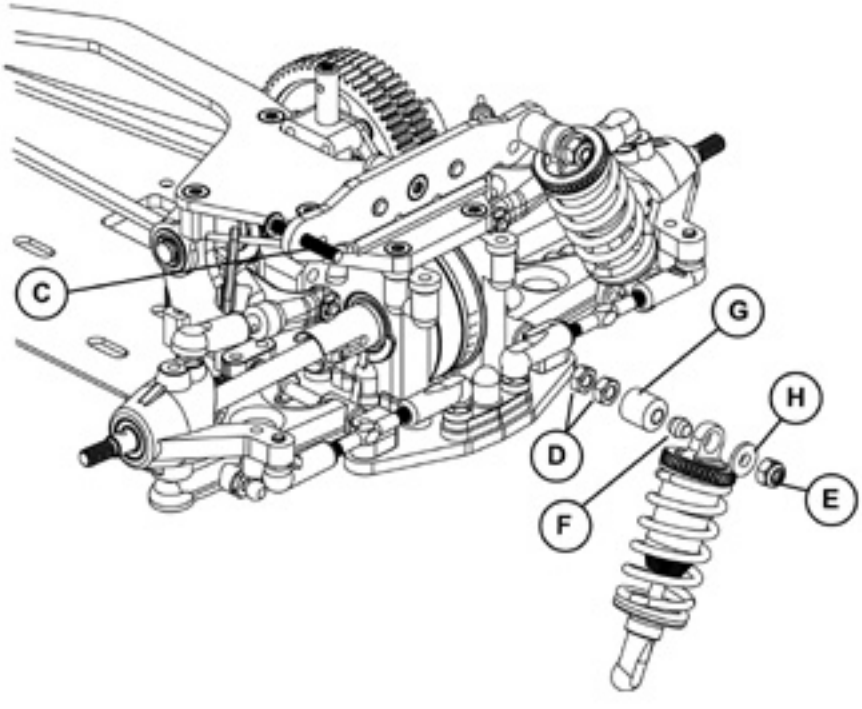

Schumacher

fusion R12

BAG 5 ASSEMBLY

Parts required:

- A — M4 Nut x 4
- B — M4 Steel Washer x 4
- C — M3 x 20 Button Head x 2
- D — M3 Nut x 4
- E — M3 Nyloc Nut x 2
- F — Shock Mount Bush x 2
- G — Shock Mount Collar x 2
- H — Shock Mount Washer x 2
- I — Pin Drive Disc Spring x 4
- J — 1.5mm x 11.8mm Needle Road x 4
- K — Pin Drive Hex x 4
- L — Thin Wheel Spacer x 4

4

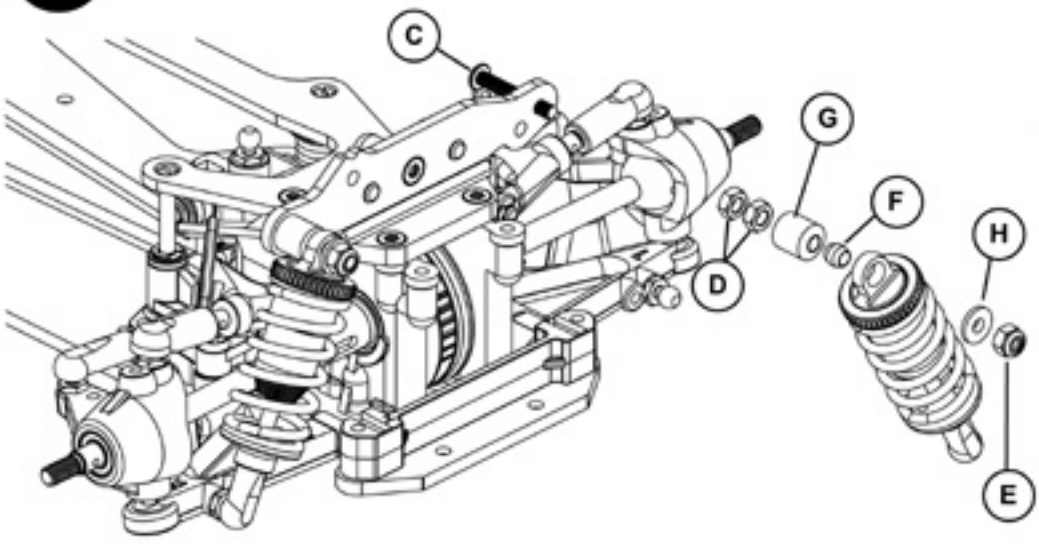

5

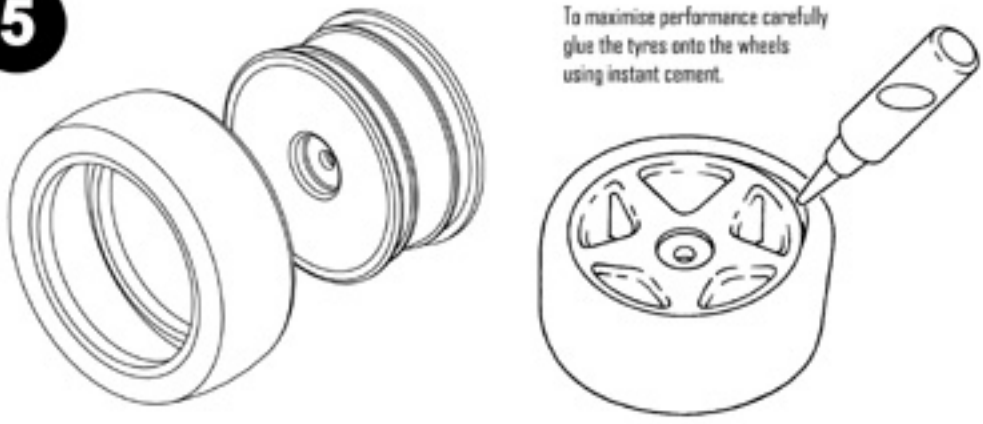

6

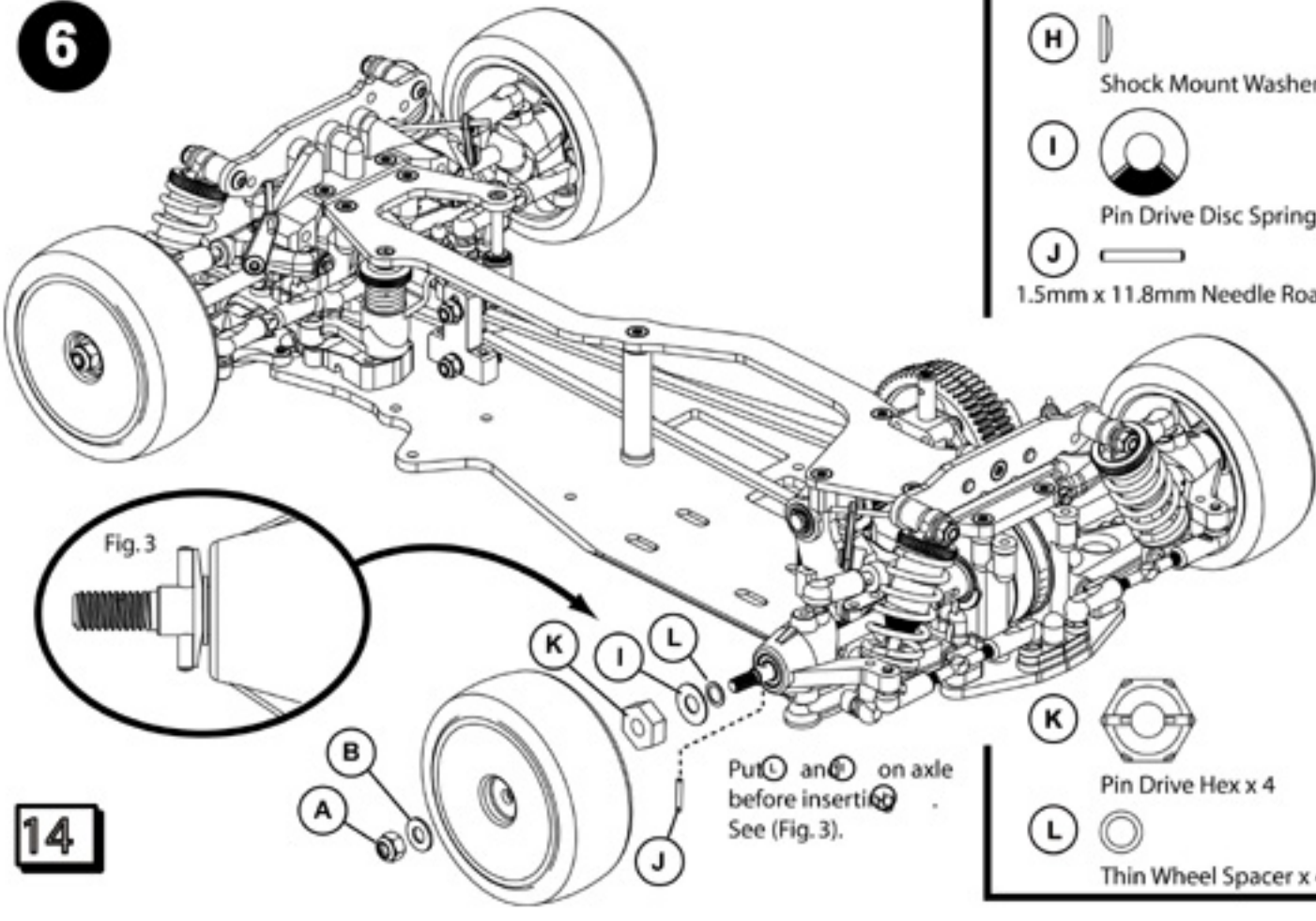

Schumacher

FUSION R12

BODY MOUNTS
Parts required:



M3 x 12 Csk Head TORX® x 8



M4 x 6mm Grub Screw x 4



"R" Clip x 4

1
Rear

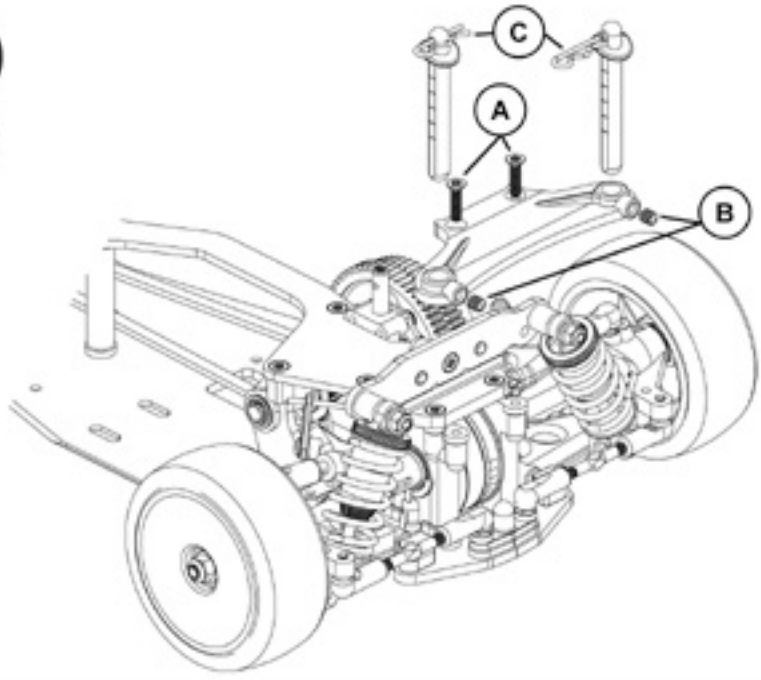

2
Front

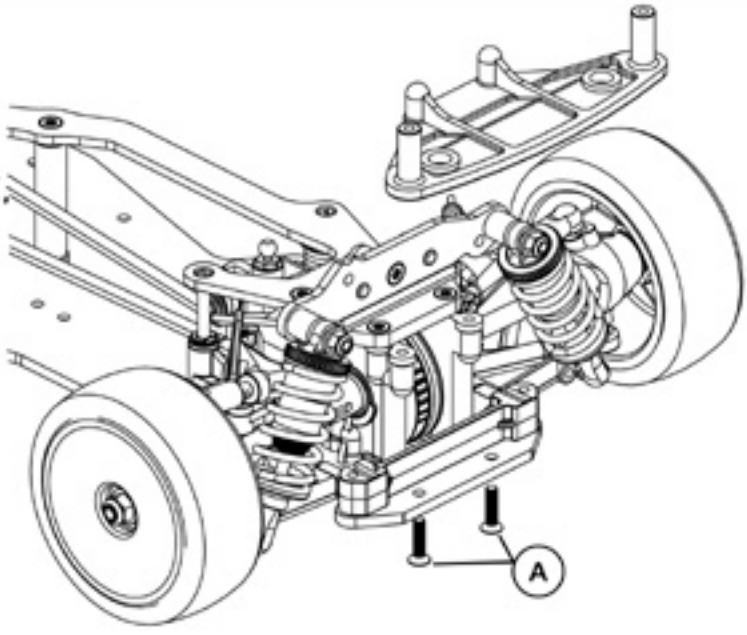

N.B.
Cut bodyposts to correct length to suit your bodyshell.

3
Front

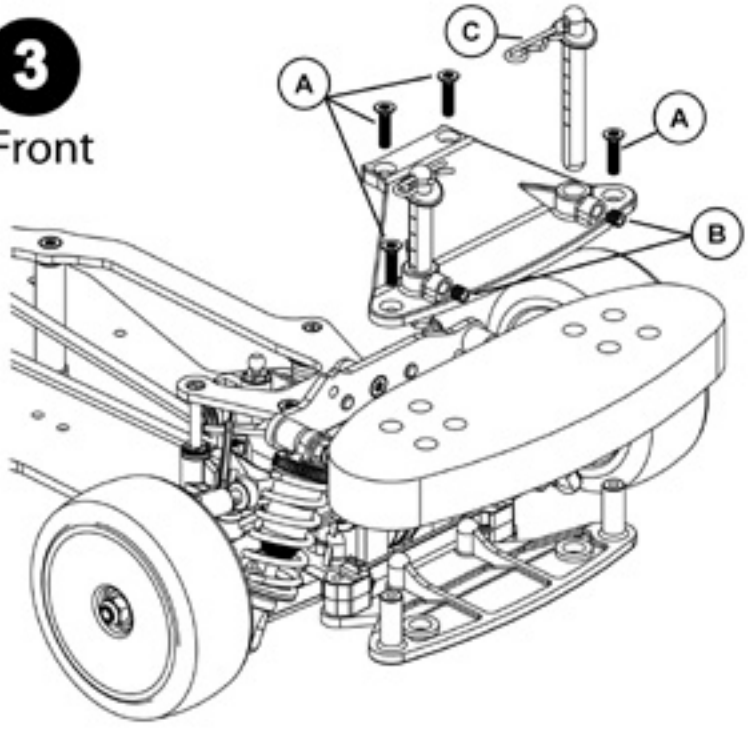

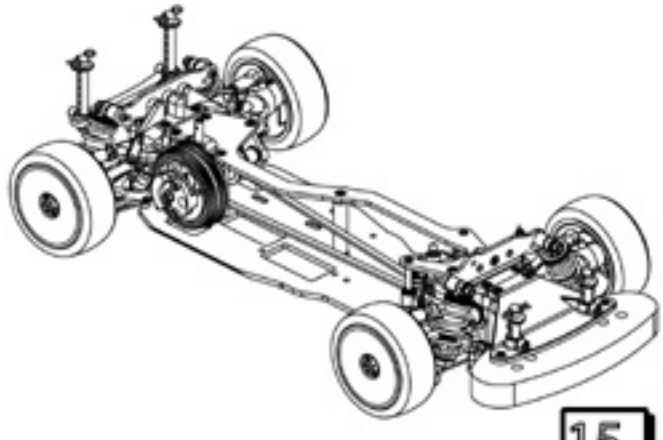

Schumacher

FUSION R12

ENGINE ASSEMBLY

Parts required:

- A — M3 x 10 Cap Head x 4
- B — 5 x 9 Ballrace x 1
- C — M3 Washer x 1
- D — M3 x 16 Cap Head x 1
- E — 5 x 8 Flanged Ballrace x 1

1

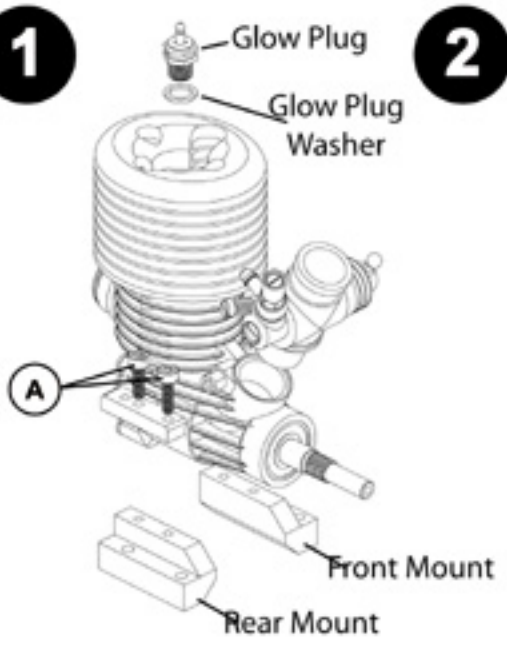

2

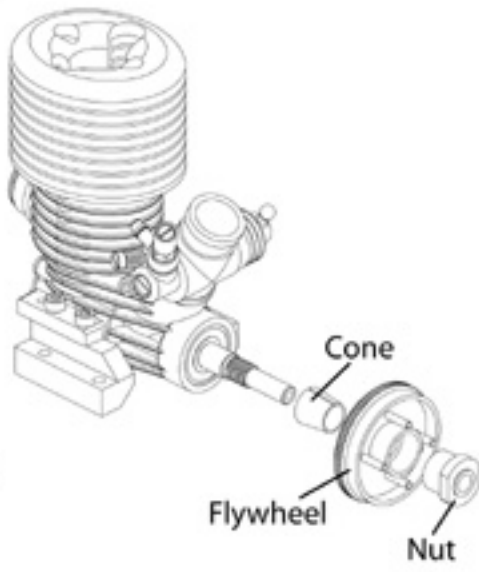

3

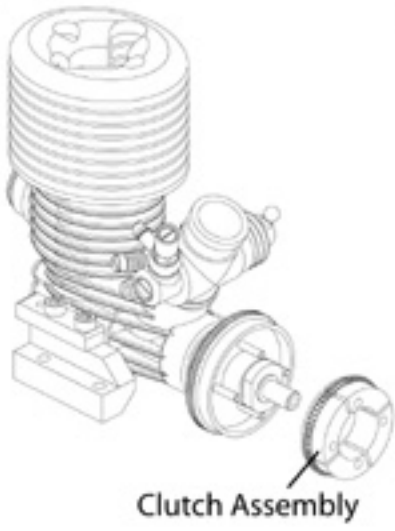

4

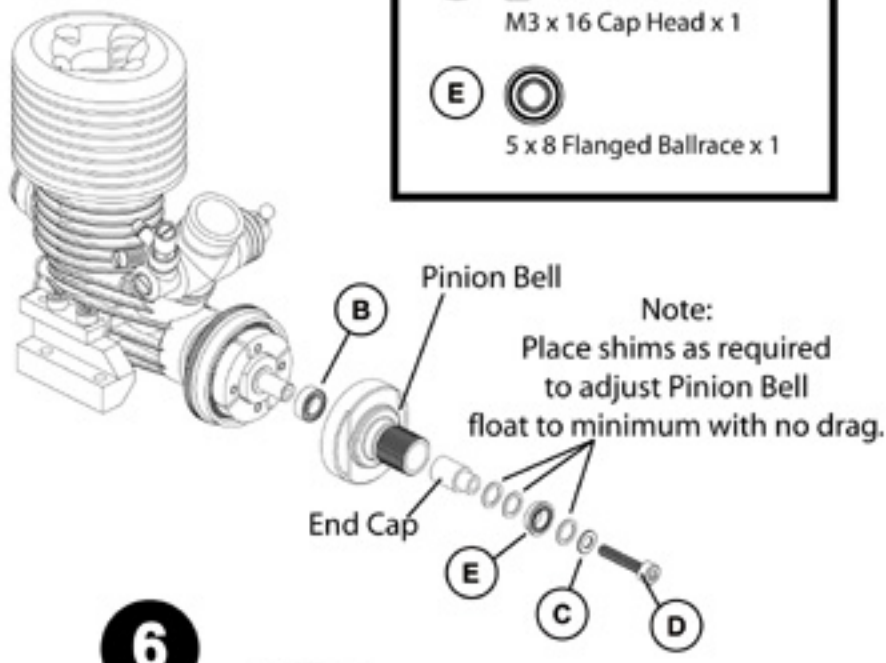

5

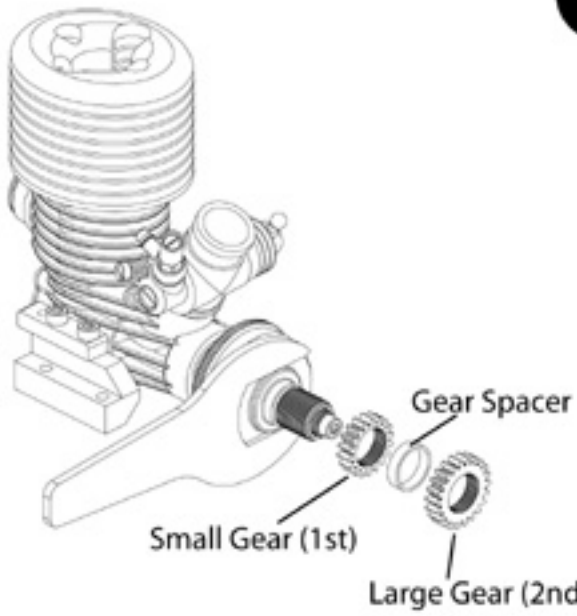

6

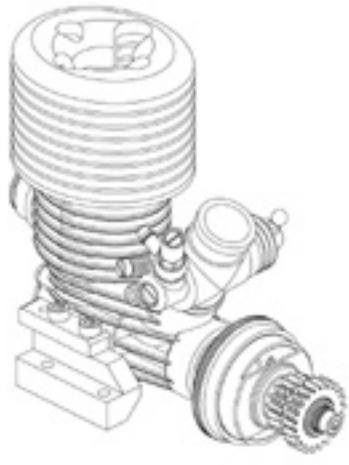

Final Assembly

Schumacher

fusion R12

7

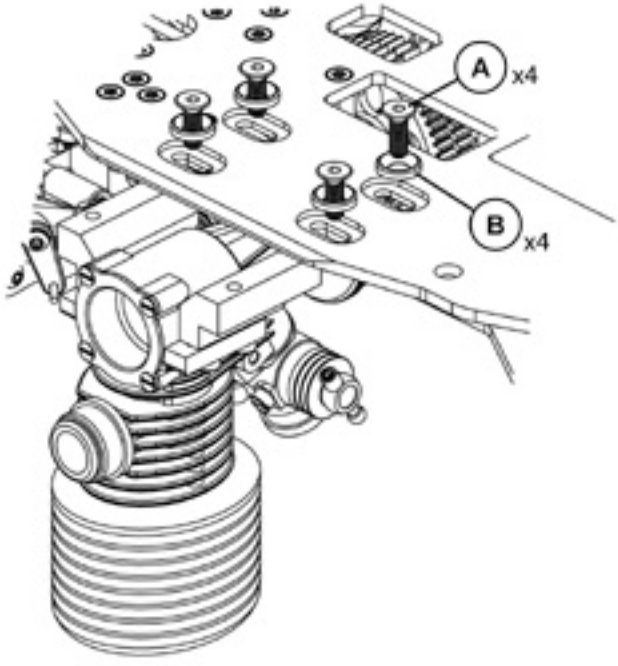

ENGINE MOUNTING

A



M4 x 12 Csk Head x 4

B



Chassis Button x 4

8

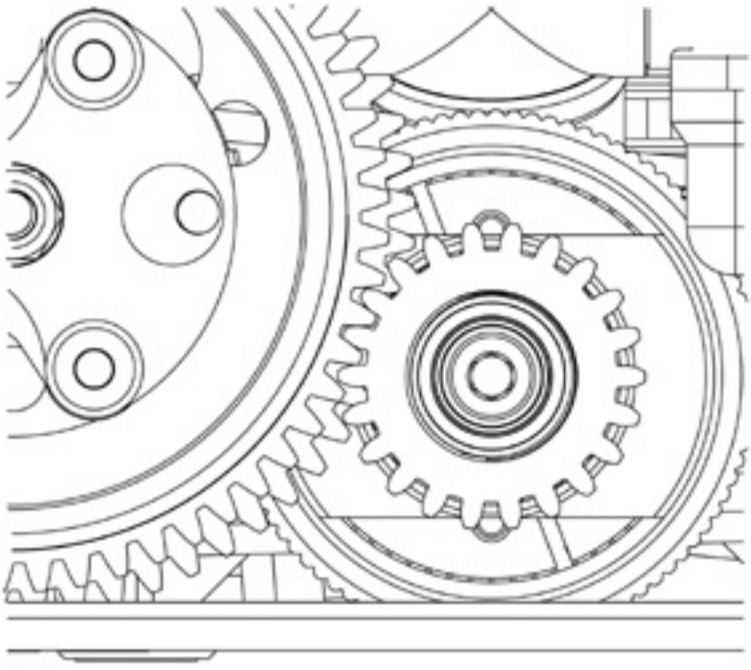

Adjust gear mesh
for minimum clearance.
Without binding the gears.

9

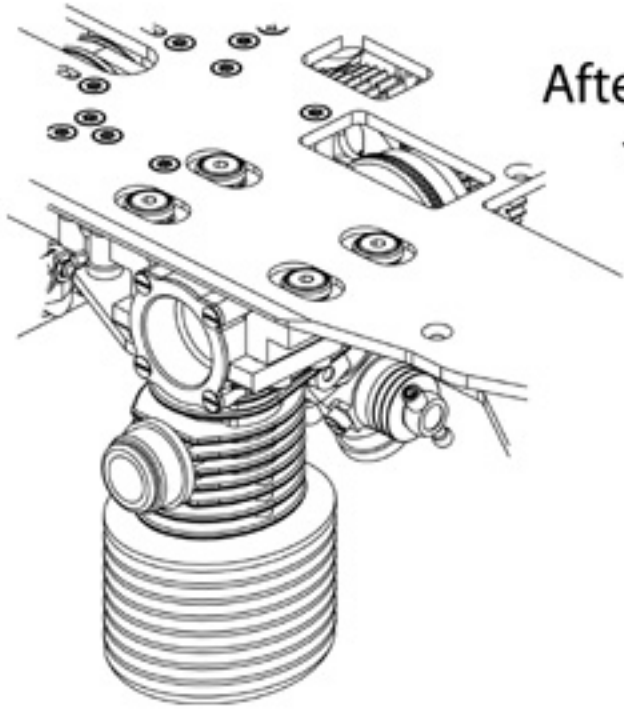

After gear adjustment
tighten screws.

Schumacher

FUSION R12

1

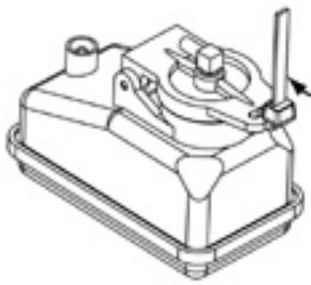

Tie the cable on to the tank as shown.

Note: Volume correction bung must be screwed into tank to meet the 75cc ruling.

2

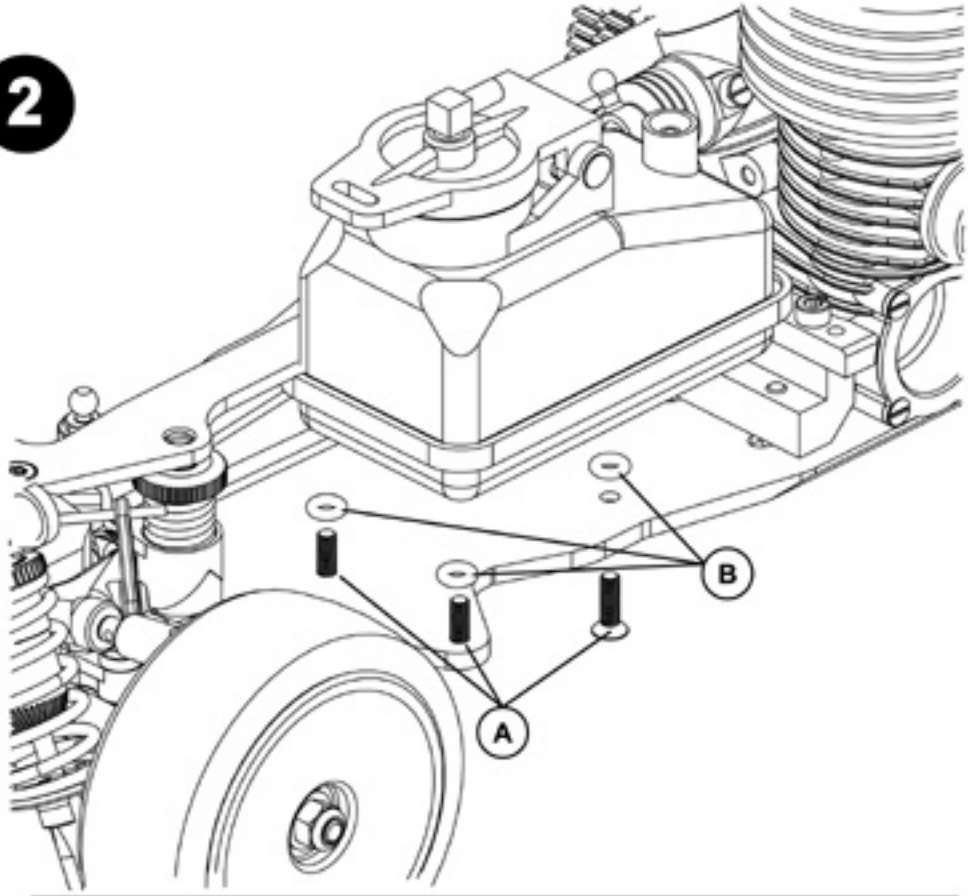

BAG 6
Parts required:

(A) M3 x 10 Csk Head TORX® x 3

(B) Small "O" Ring x 3

TRACK TIP 05
Take care not to overtighten fuel tank screws.

3

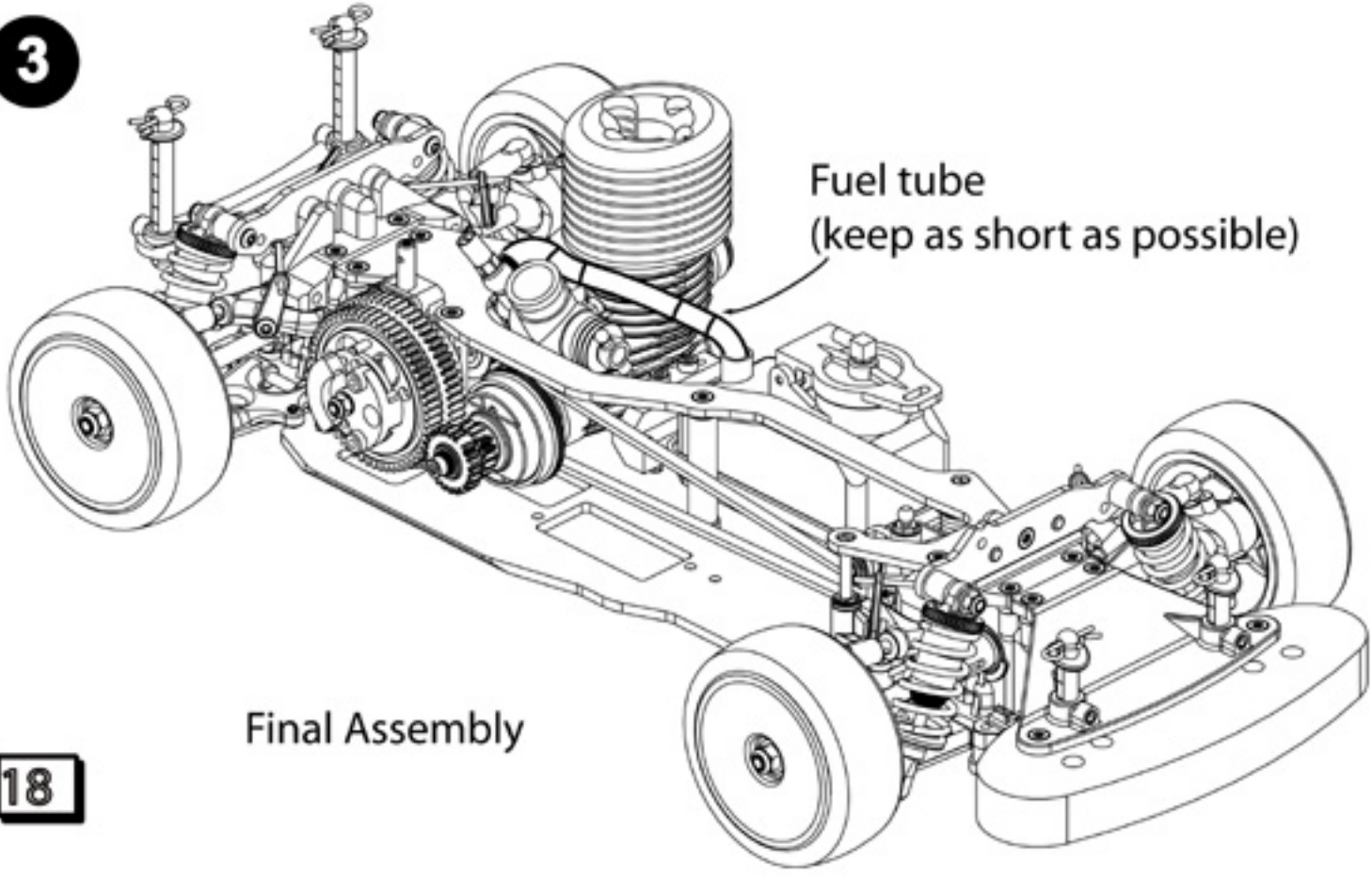

Final Assembly

1 REAR

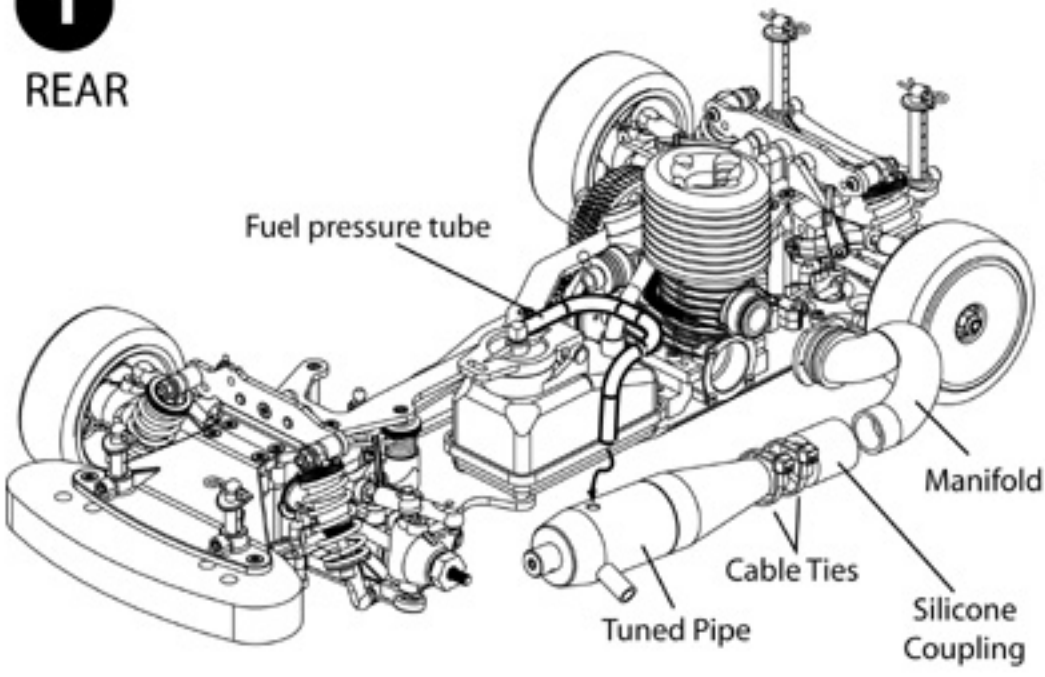

Wrap manifold spring around the engine and then locate hooks into the manifold holes.

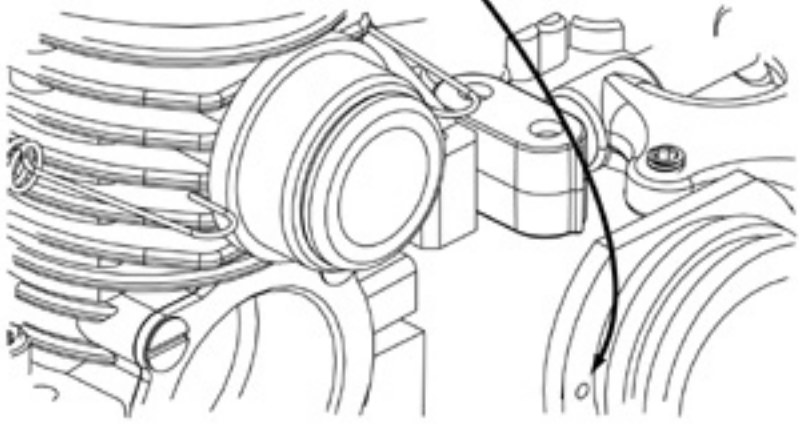

BAG 7
Parts required:

- (A) M3 x 10 Csk head TORX® x 1
- (B) M3 washer x 1
- (C) M3 Nyloc Nut x 1

TRACK TIP 06

Fix the cable ties last and ensure a minimum gap between manifold and tuned pipe.

2 FRONT

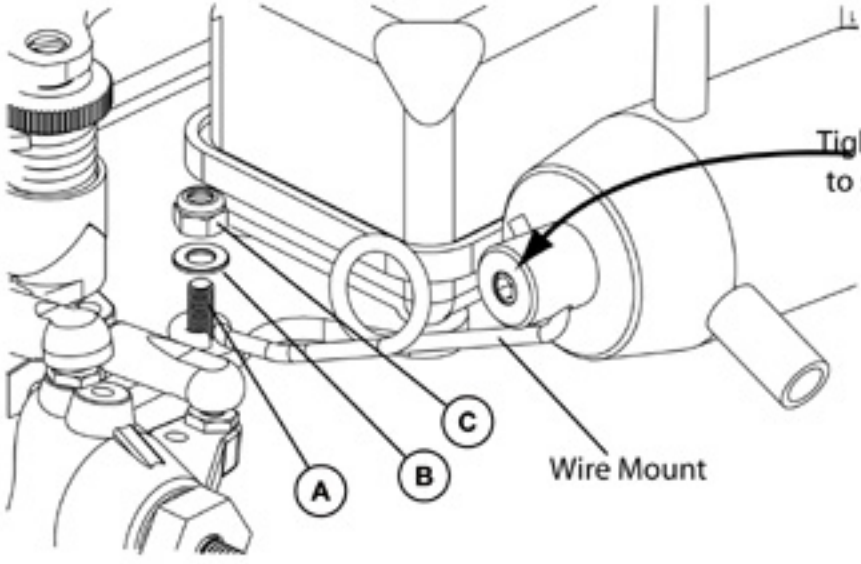

Schumacher

fusion R12

BAG 8
Parts required:

- (A) M3 x 12 Csk Head TORX® x 4
- (B) M3 x 10 Button Head x 4
- (C) M3 x 8 Csk Head TORX® x 1
- (D) M3 Washer x 4

1

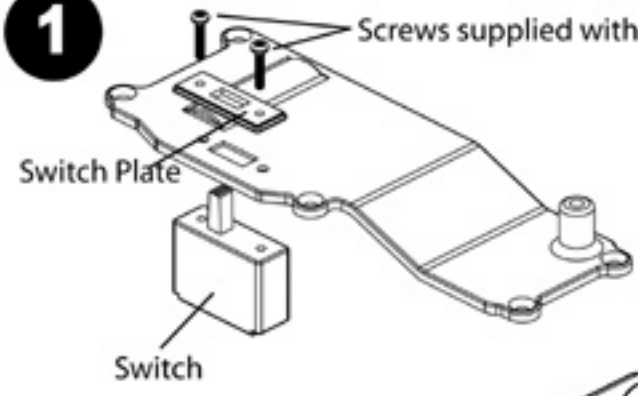

2

NOTE: Use foam pads to insu
the receiver from vibration.

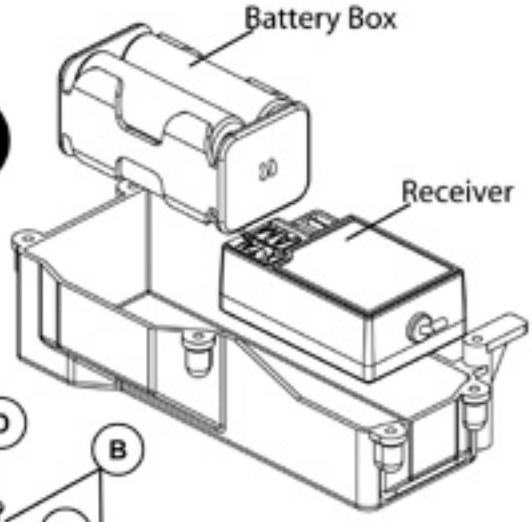

3

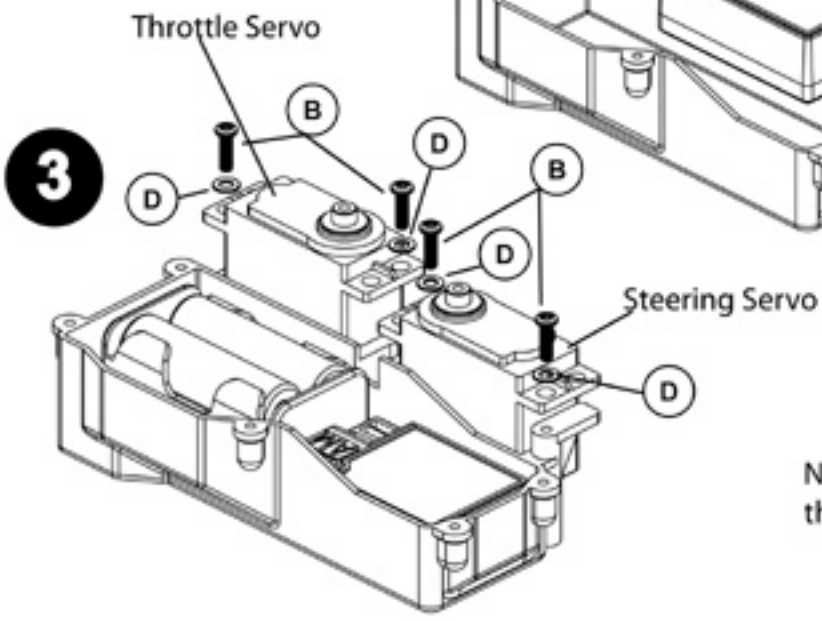

NOTE: DO NOT fit servo mounting grommets that are supplied with the radio equipment.

4

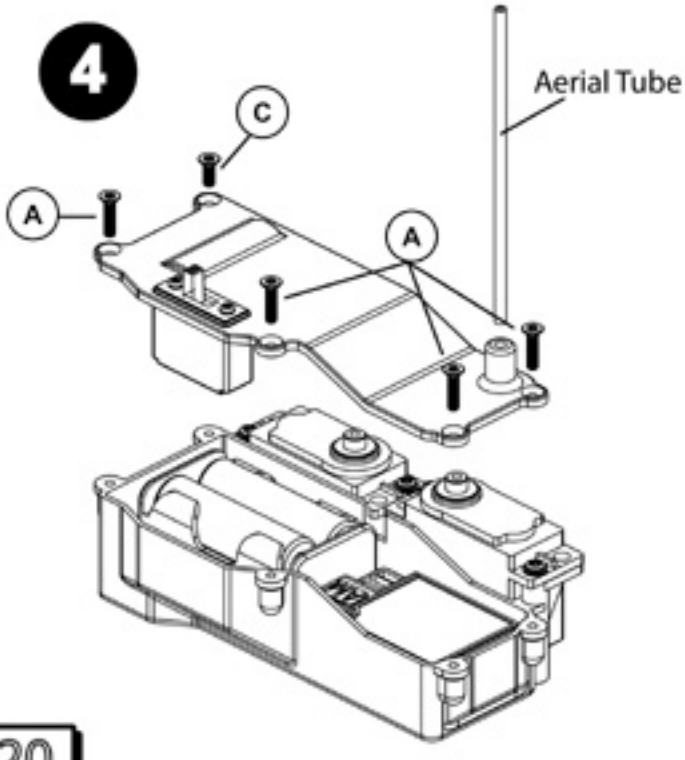

5

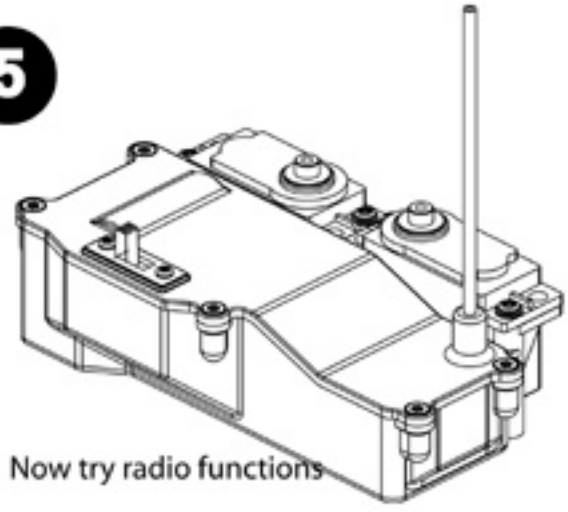

Now try radio functions

6

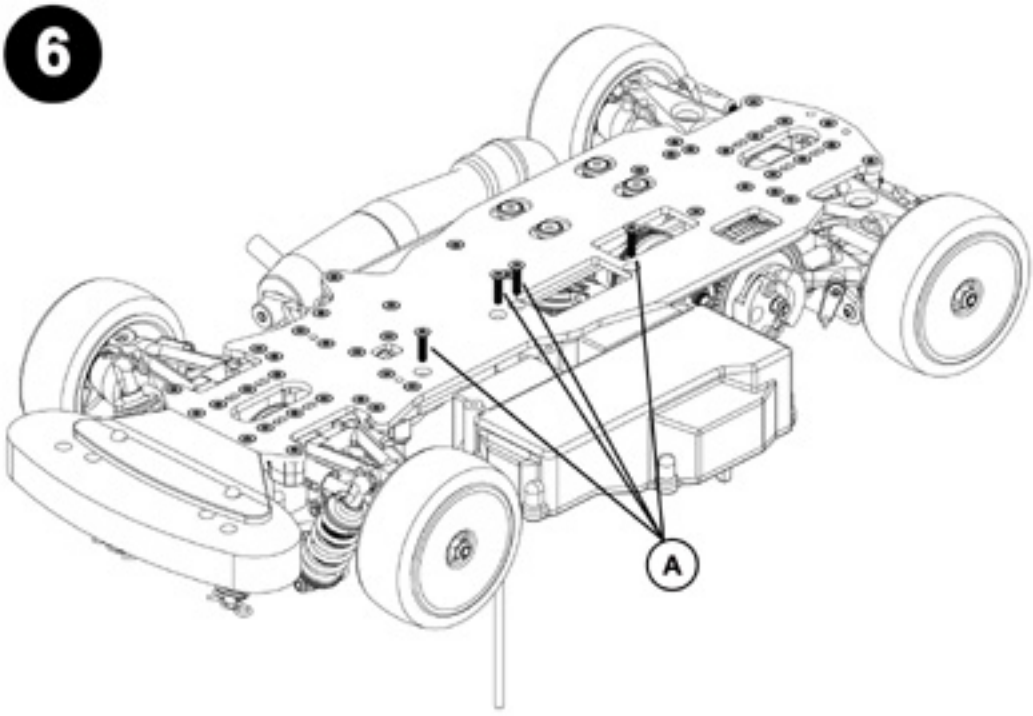

Bag 8
Parts required:

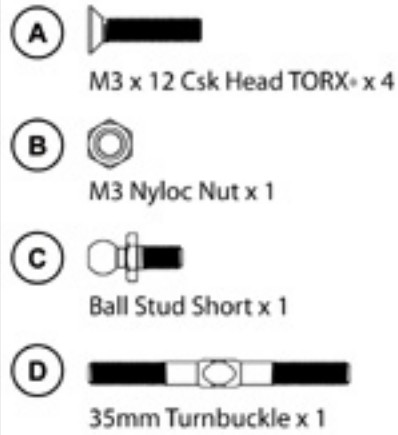

TRACK TIP 07

Make sure the servos are at neutral before assembling the servo horns.

7

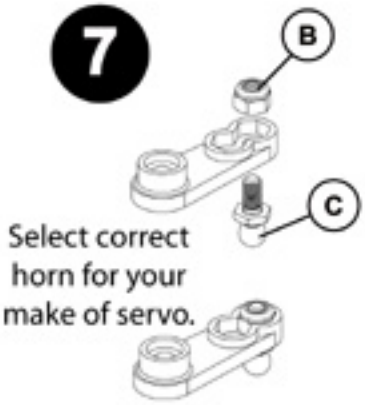

8

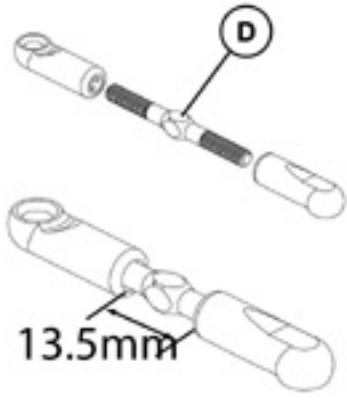

9

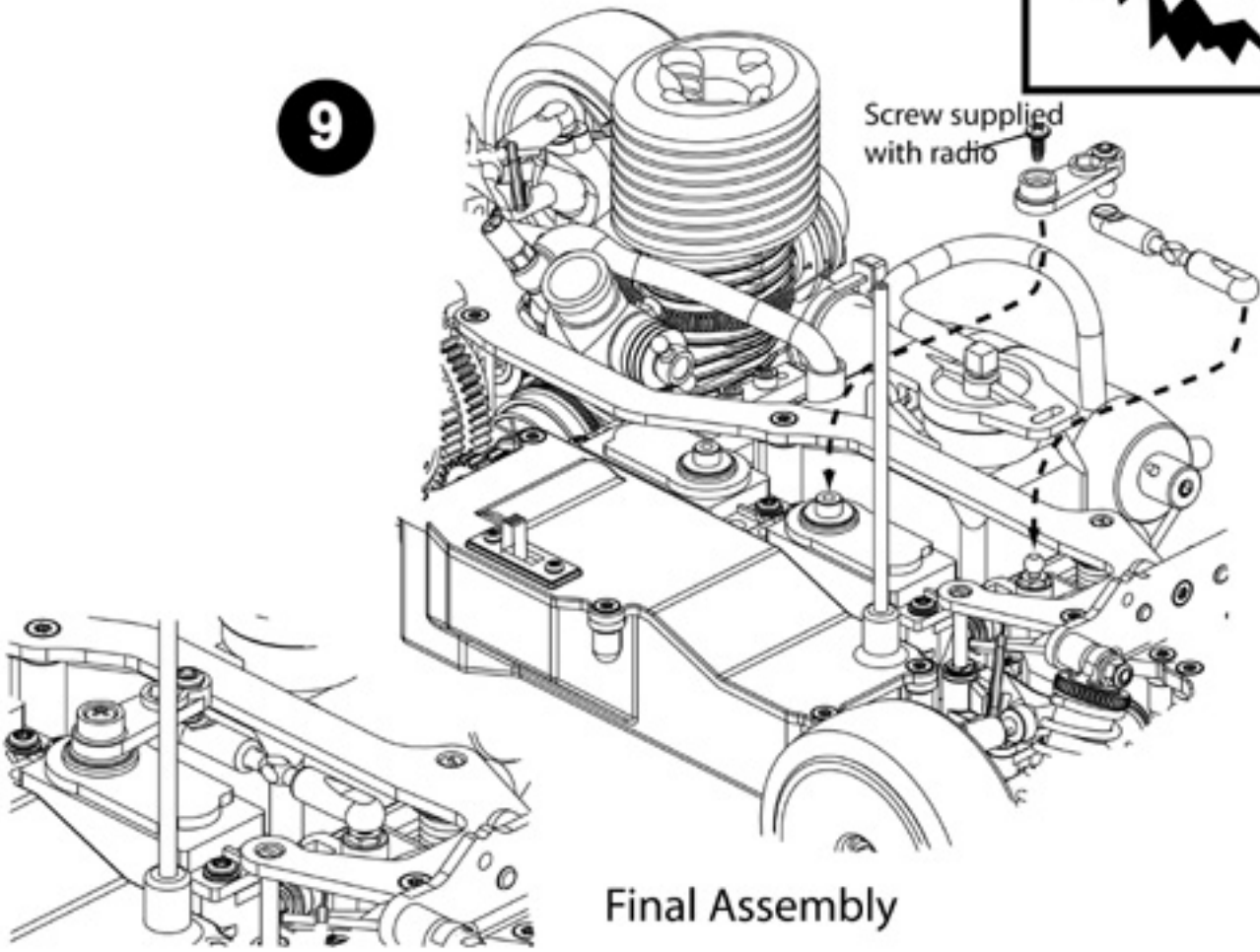

Final Assembly

Schumacher

FUSION R12

BAG 8
Parts required.

(A) No.2 x 3/8 Pan Head x 1

10

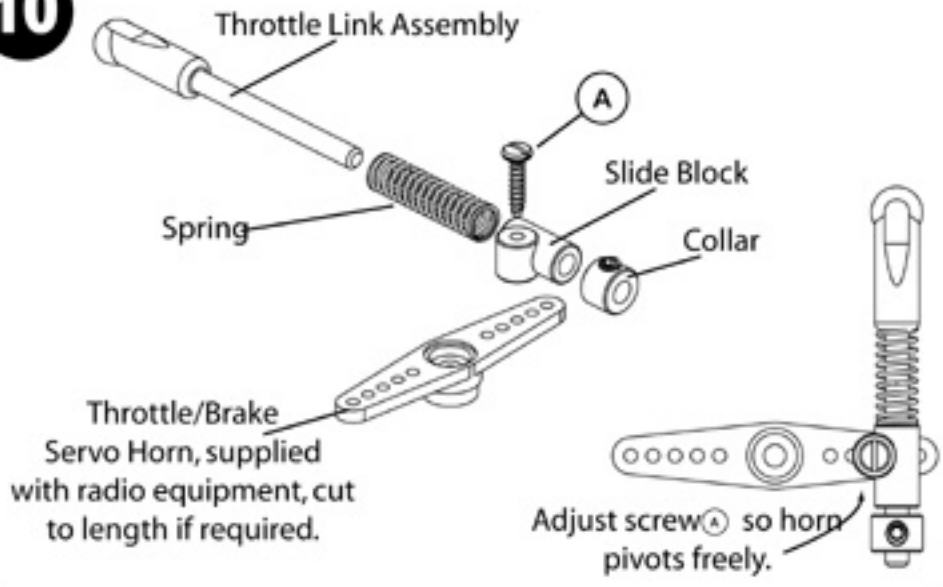

11

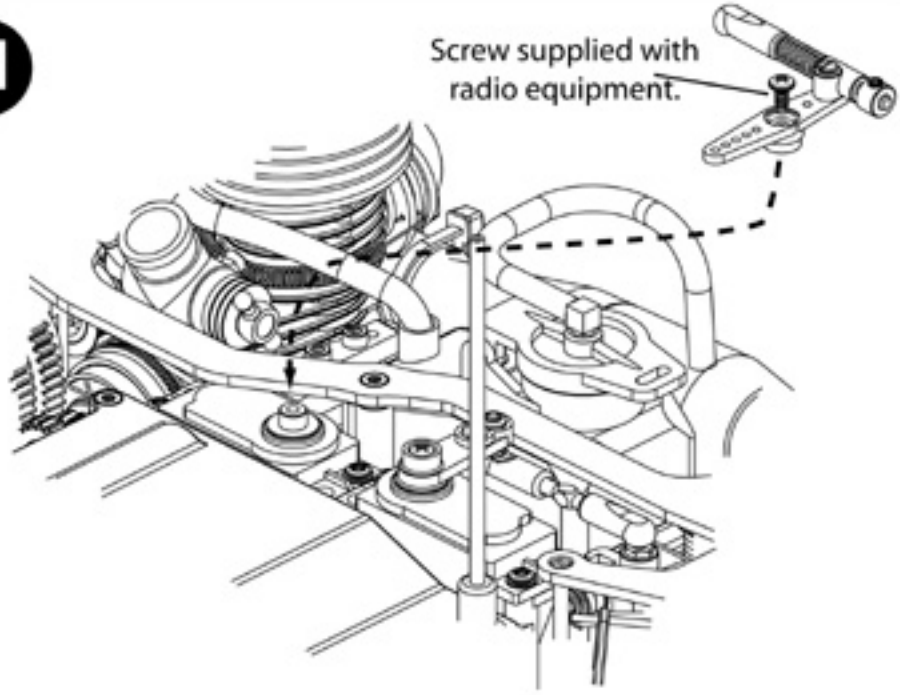

12

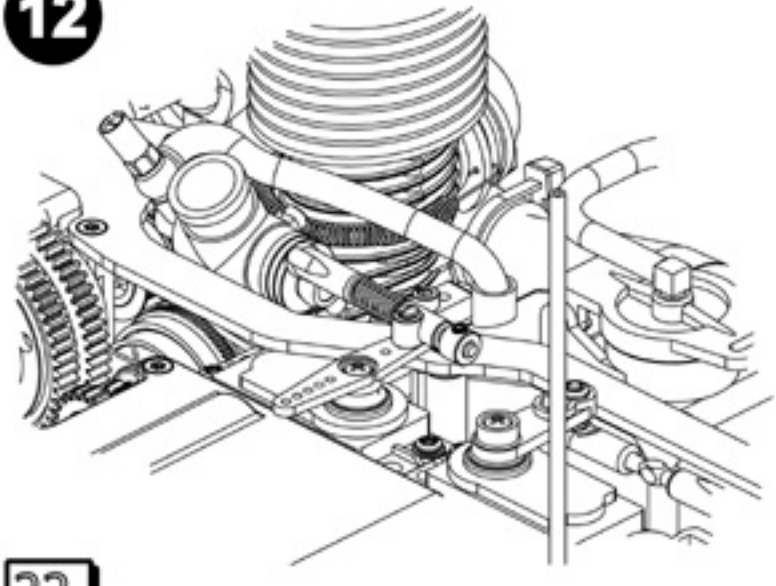

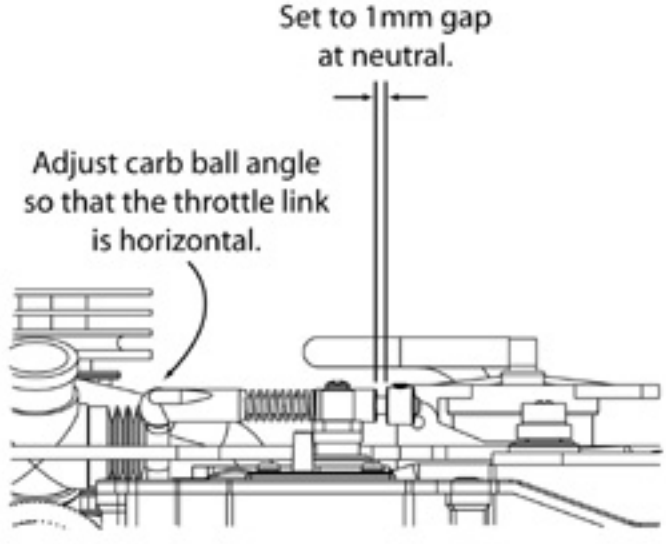

13

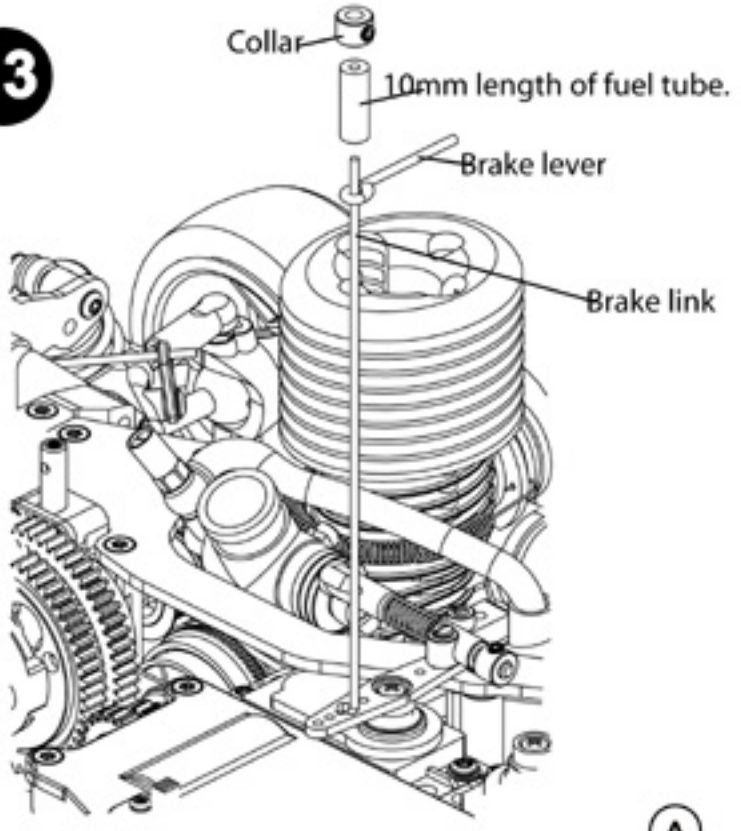

BAG 8
Parts required.

(A) M3 x 3 Grub Screw x 1

TRACK TIP 08

Ensure the brake link is free to move in the servo horn.

14

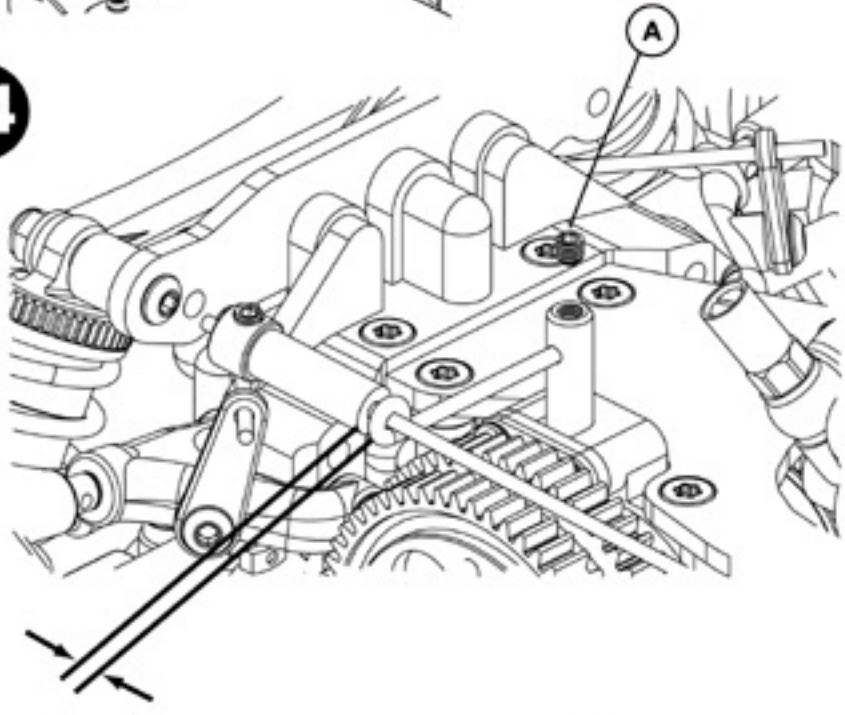

Adjust to a 1mm gap at neutral.

15

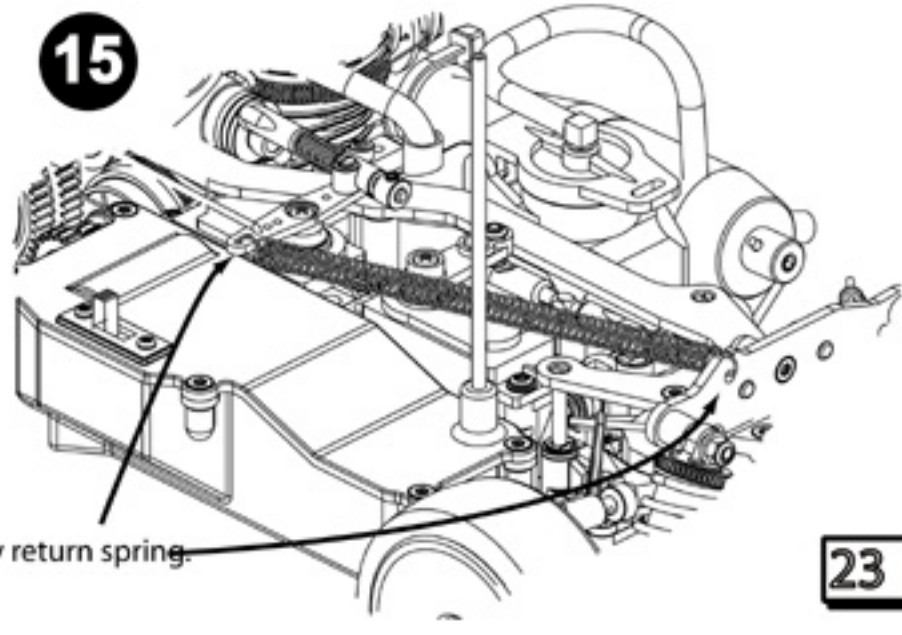

Fit safety return spring.

Schumacher

FUSION R12

FRONT DIFFERENTIAL SERVICE

- A — 5 x 9 x 3 Ball Race x 1
- B — Thrust Race Cage x 1
- C — Small Thrust Washer x 1
- D — 1/16th Dia Diff Ball x 8
- E — Diff Disc Spring x 6
- F — Large Thrust Race Washer x 1
- G — 2.5mm Diff Ball x 12

1

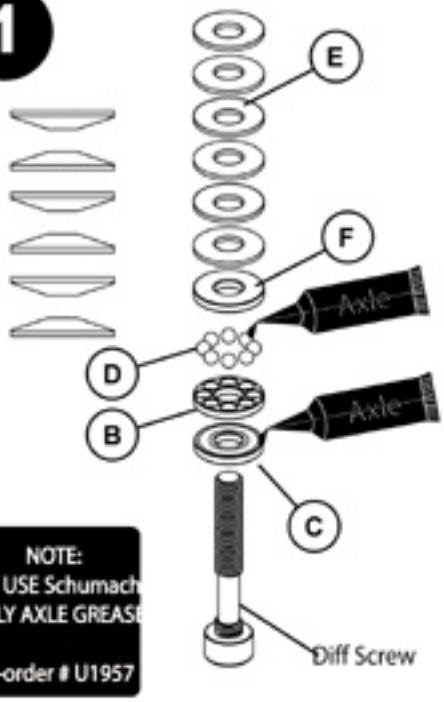

NOTE:
NLY USE Schumach
MOLY AXLE GREAS
Re-order # U1957

2

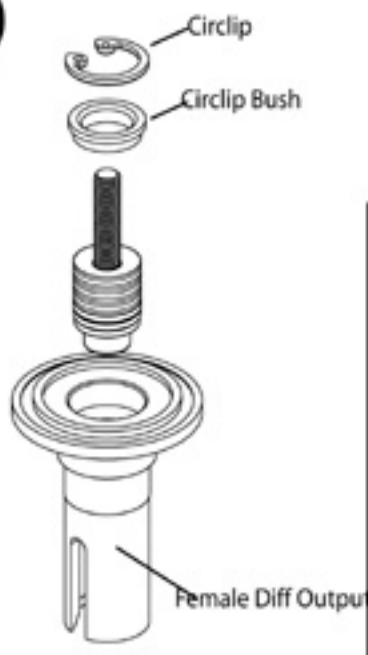

3

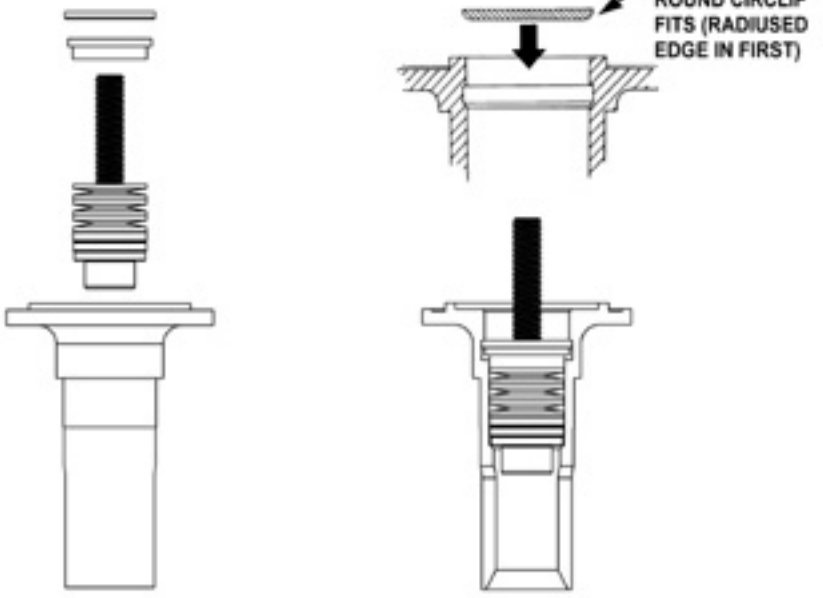

4

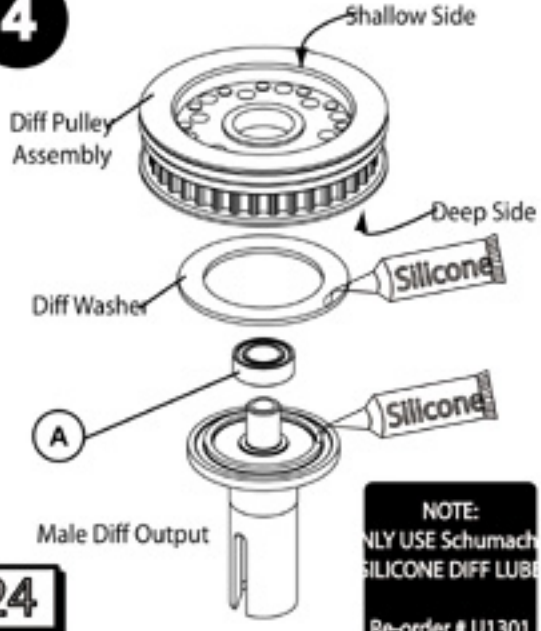

NOTE:
NLY USE Schumach
ILICONE DIFF LUBE
Re-order # U1301

5



Schumacher

Fusion R12

FRONT DIFFERENTIAL SERVICE

- A — M3 x 6 Grub Screw x 1
- B — Thin Shim x 1
- C — 5 x 9 x 3 Ball Race x 1

6

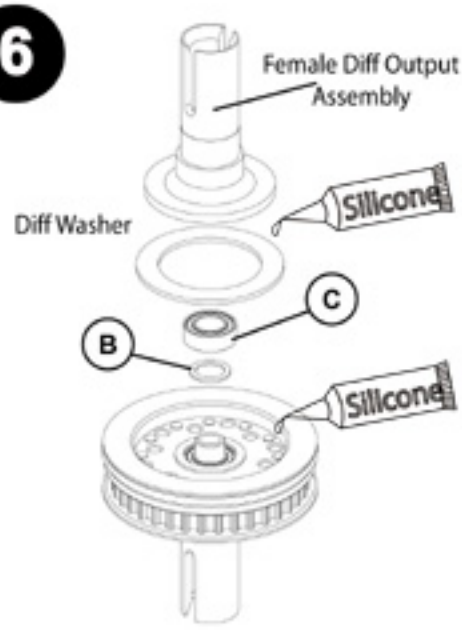

7



8

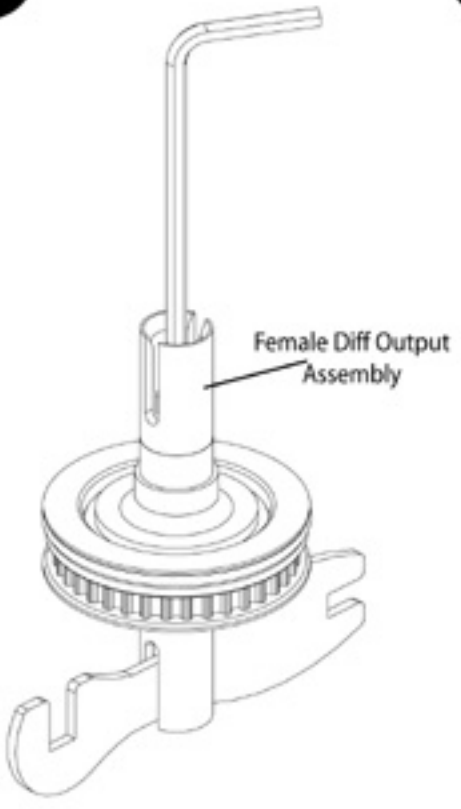

9



10

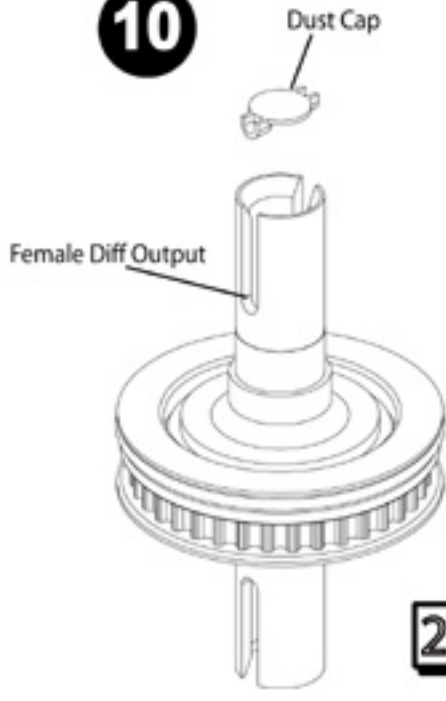

DIFF SETTING SCREW IN UNTIL TIGHT (ALL DISC SPRINGS FLAT) THEN UNDO ¼ TURN.

THEN LOCK THE SETTING WITH THE GRUB SCREW.

Schumacher

fusion R12

REAR DIFFERENTIAL SERVICE

- A — 5 x 9 x 3 Ball Race x 1
- B — Thrust Race Cage x 1
- C — Small Thrust Washer x 1
- D — 1/16th Dia Diff Ball x 8
- E — Diff Disc Spring x 6
- F — Large Thrust Race Washer x 1
- G — 2.5mm Diff Ball x 12

1

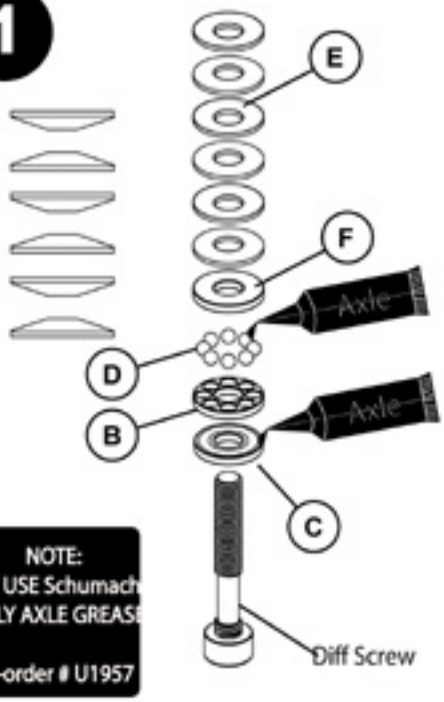

NOTE:
NLY USE Schumach
MOLY AXLE GREAS
Re-order # U1957

2

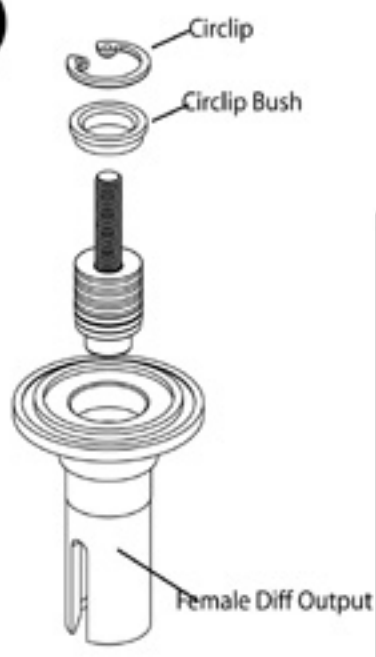

3

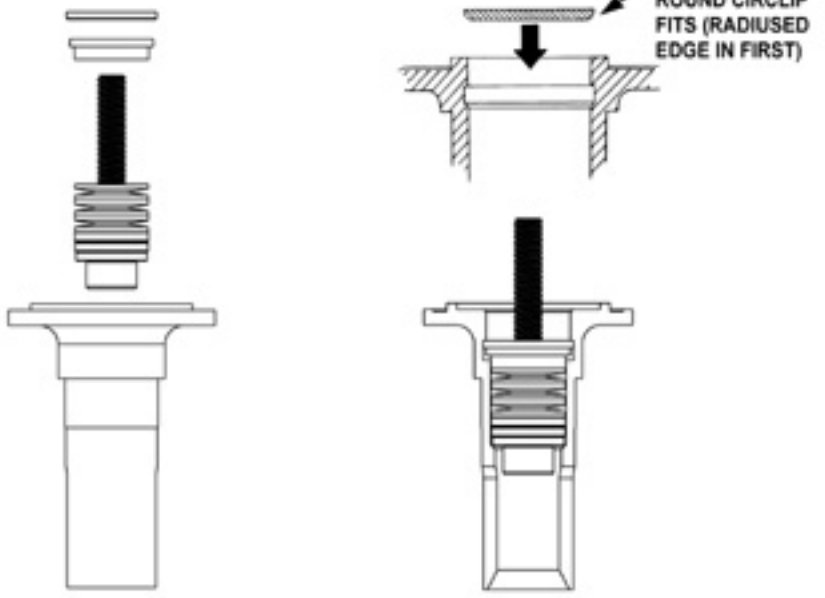

4

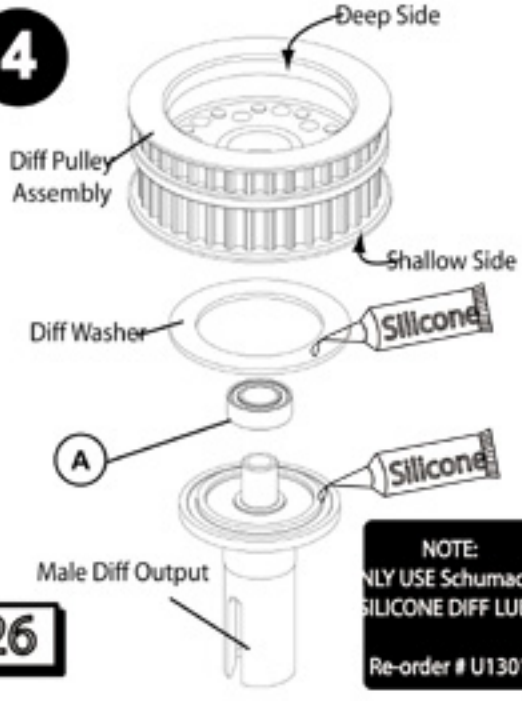

NOTE:
NLY USE Schumach
SILICONE DIFF LUBE
Re-order # U1301

5



Schumacher

fusion R12

TRANSMISSION SERVICE

Parts required:

A — M3 x 10 Csk Head TORX+ x 4

B — M3 Nyloc Nut x 2

C — M3 Washer x 2

D — "E" Clip x 2

E — 10 x 15 x 4 Ballrace x 4

F — 4 x 8 Flanged Ballrace x 4

1

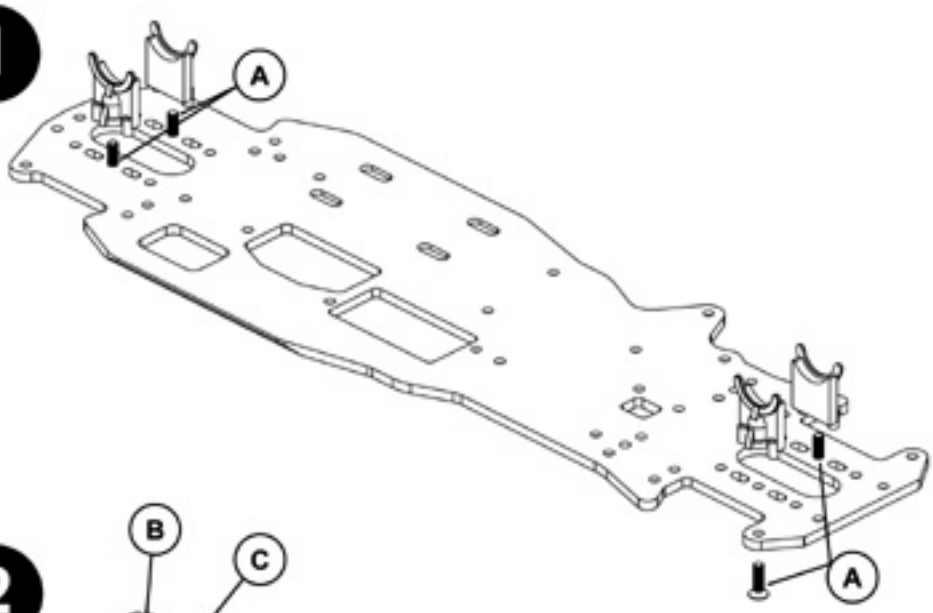

2

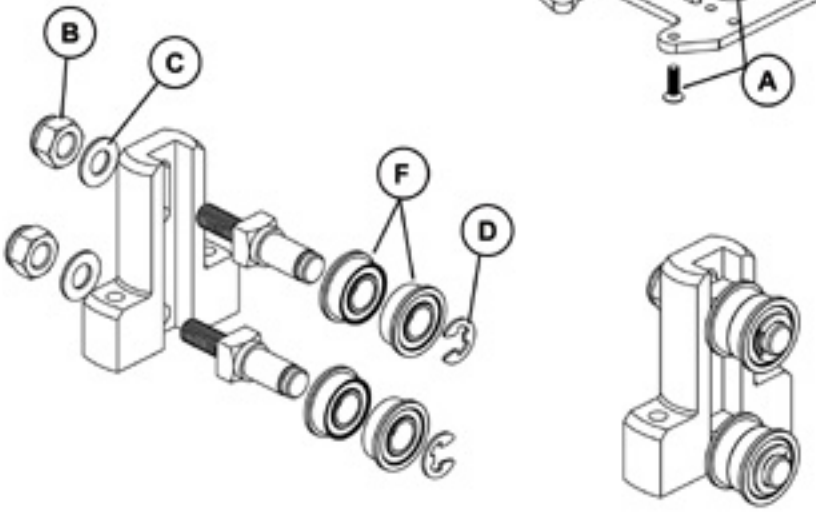

3

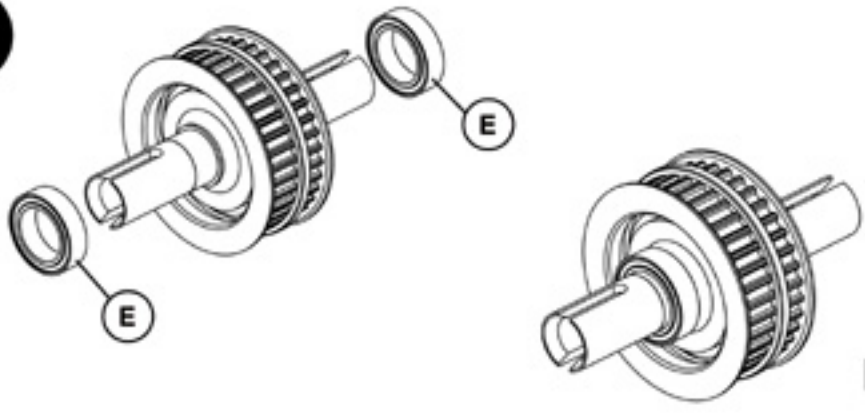

REAR DIFF

4

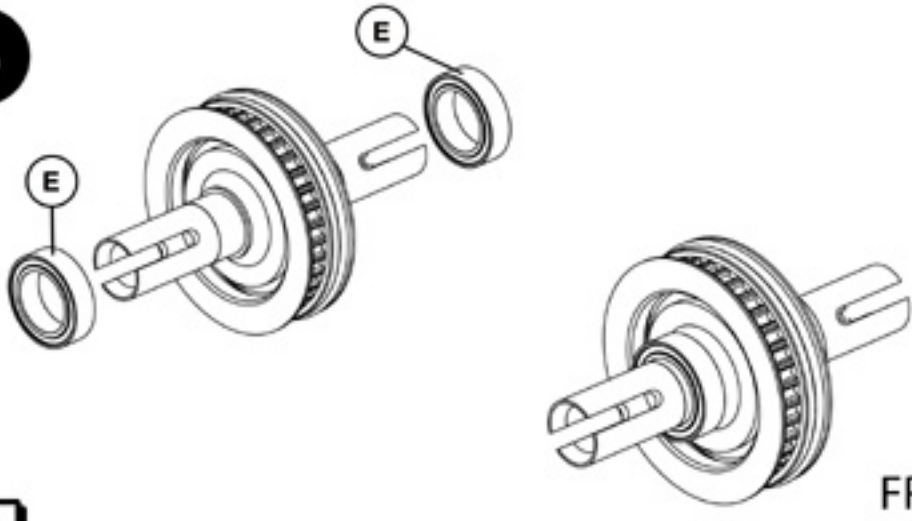

FRONT DIFF

Schumacher

fusion R12

TRANSMISSION SERVICE

Parts required:

- (A) M3 x 12 Csk Head TORX® x 10
- (B) M3 x 10 Csk Head TORX® x 4
- (C) 6 x 12 x 4 Ballrace x 1
- (D) 5 x 9 Flanged Ballrace x 2
- (E) Circlip x 1

5

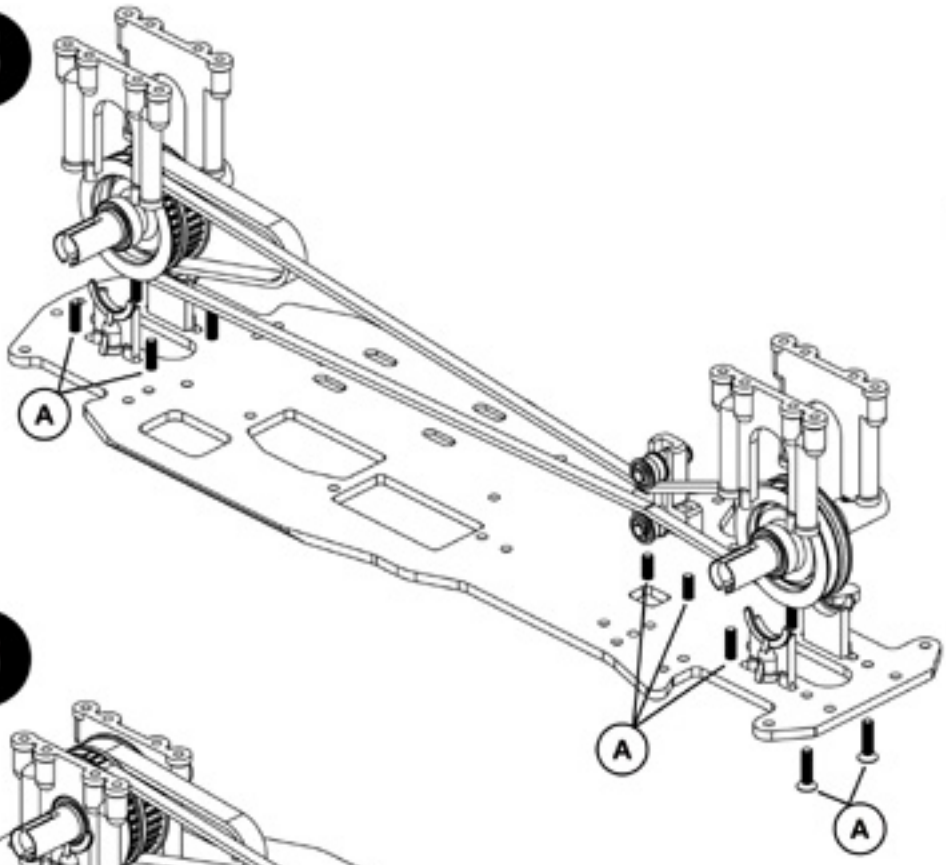

6

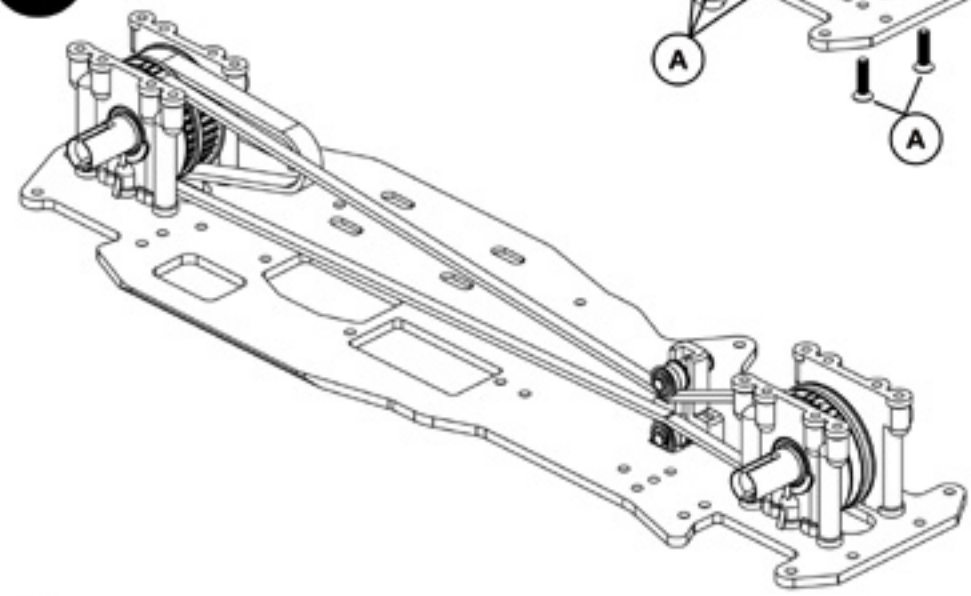

7

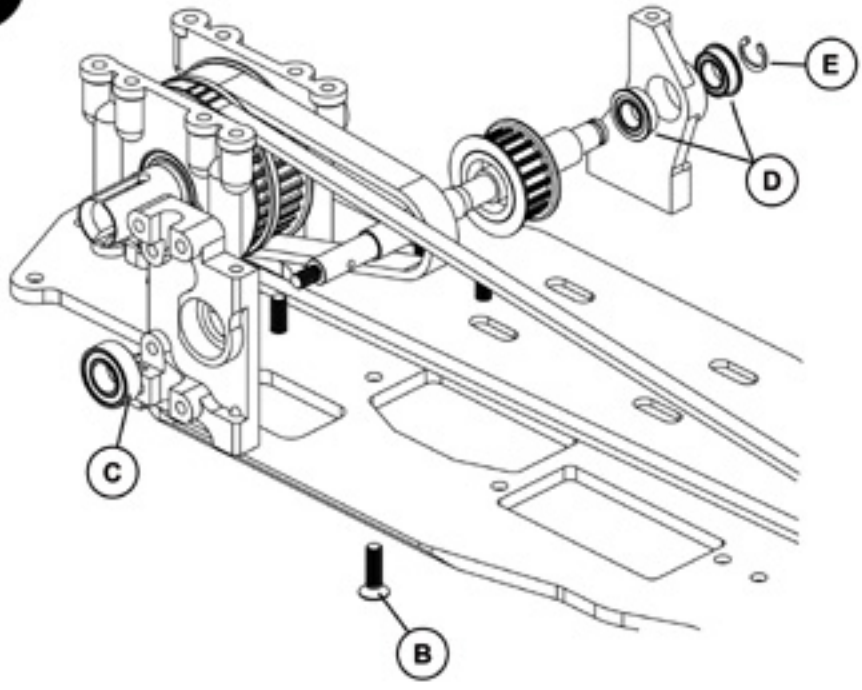

Schumacher

FUSION R12

TRANSMISSION SERVICE

Parts required:

A — 1.5o x 9.8 pin x 1

B — M3 x 10mm Button x 4

C — M3 x 4mm Button x 4

8

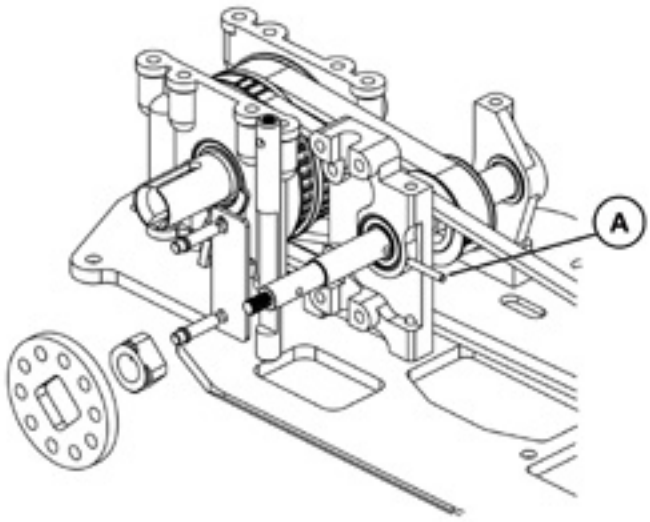

9

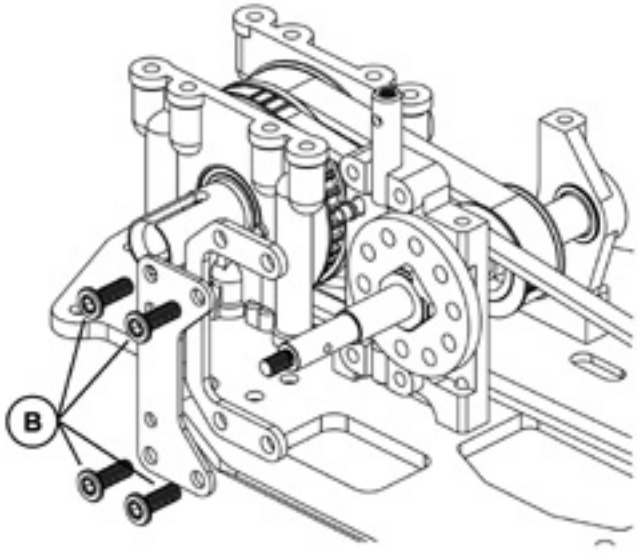

10

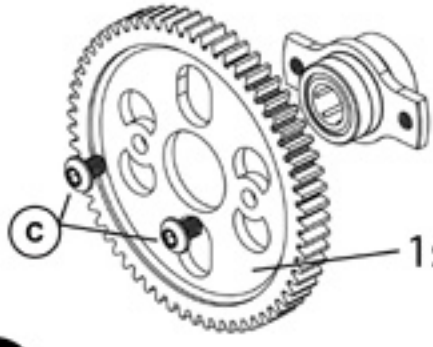

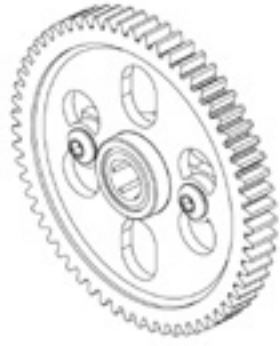

11

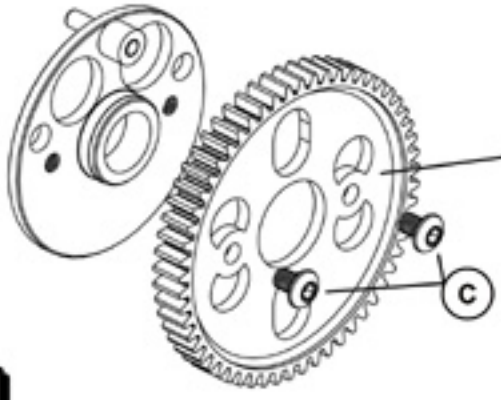



12

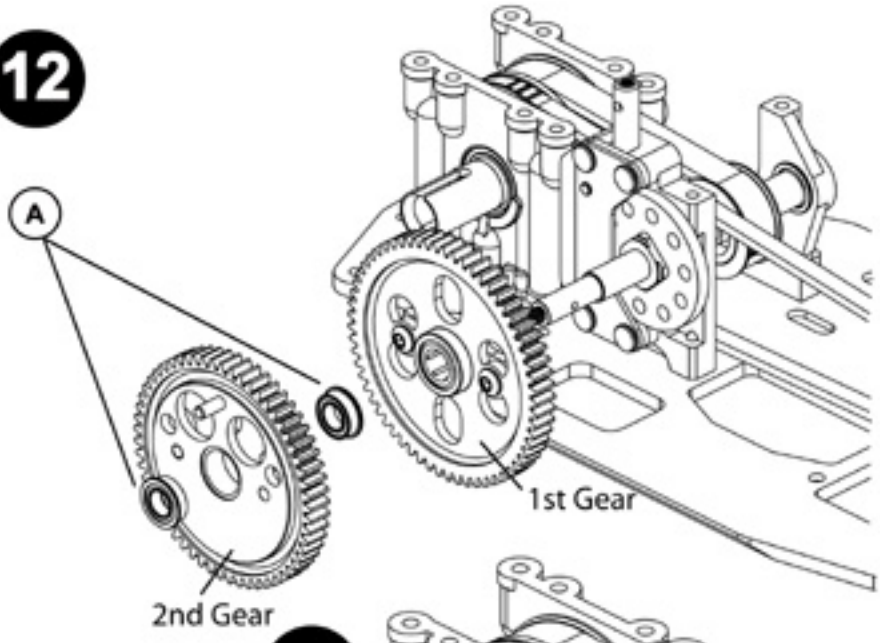

13

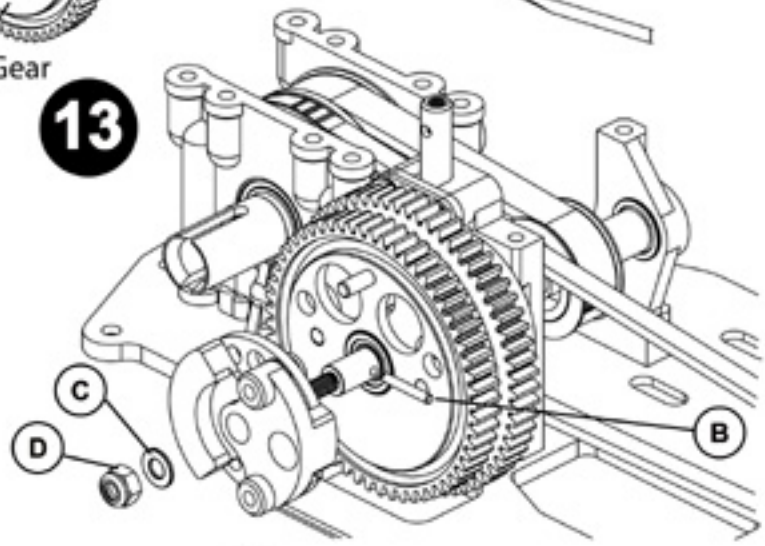

TRANSMISSION SERVICE

A — 5 x 9 Flanged Ballrace x 2

B — 1.5o x 9.8 pin x 1

C — M3 Washer x 1

D — M3 Nyloc Nut x 1

E — M3 x 12 Csk Head TORX® x 4

F — M3 x 10 Csk Head TORX® x 4

14

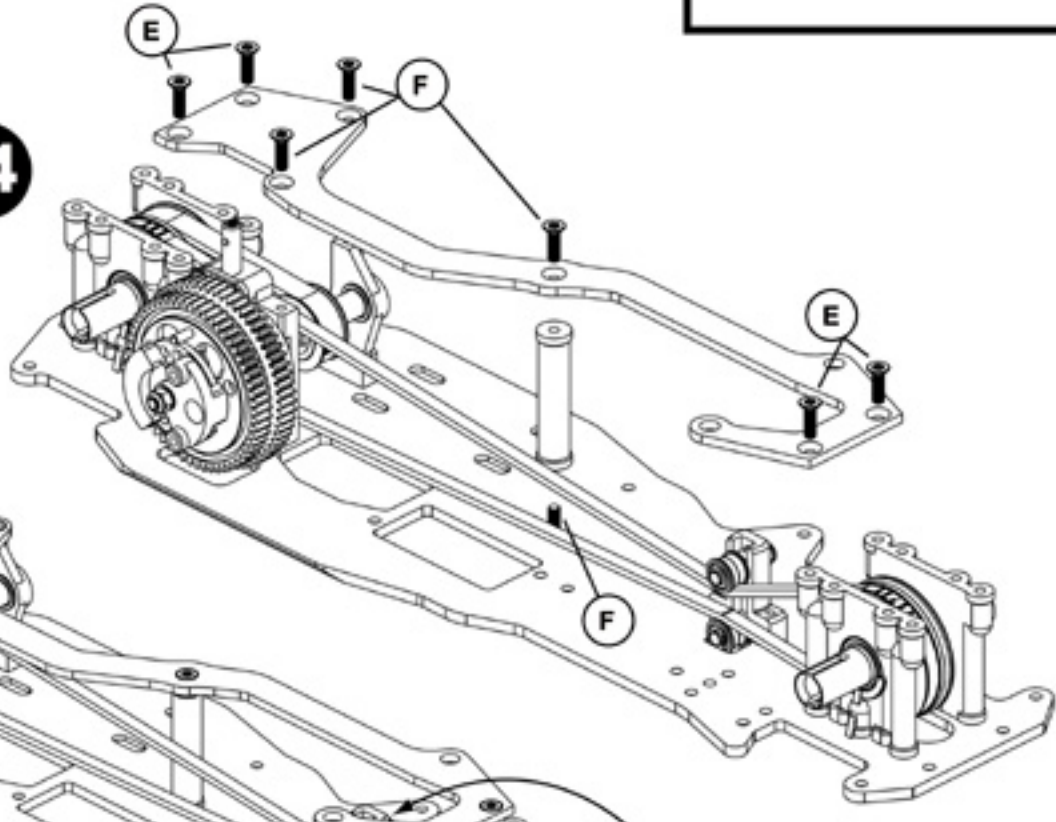

15

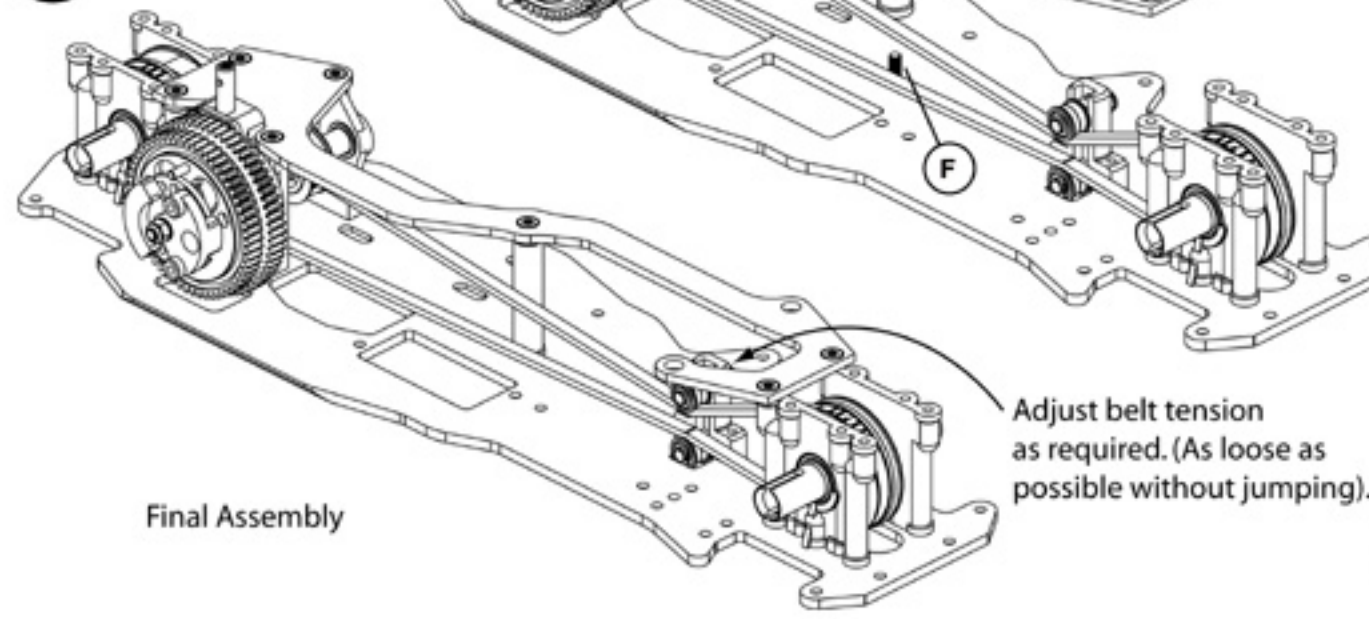

Final Assembly

Schumacher

fusion R12

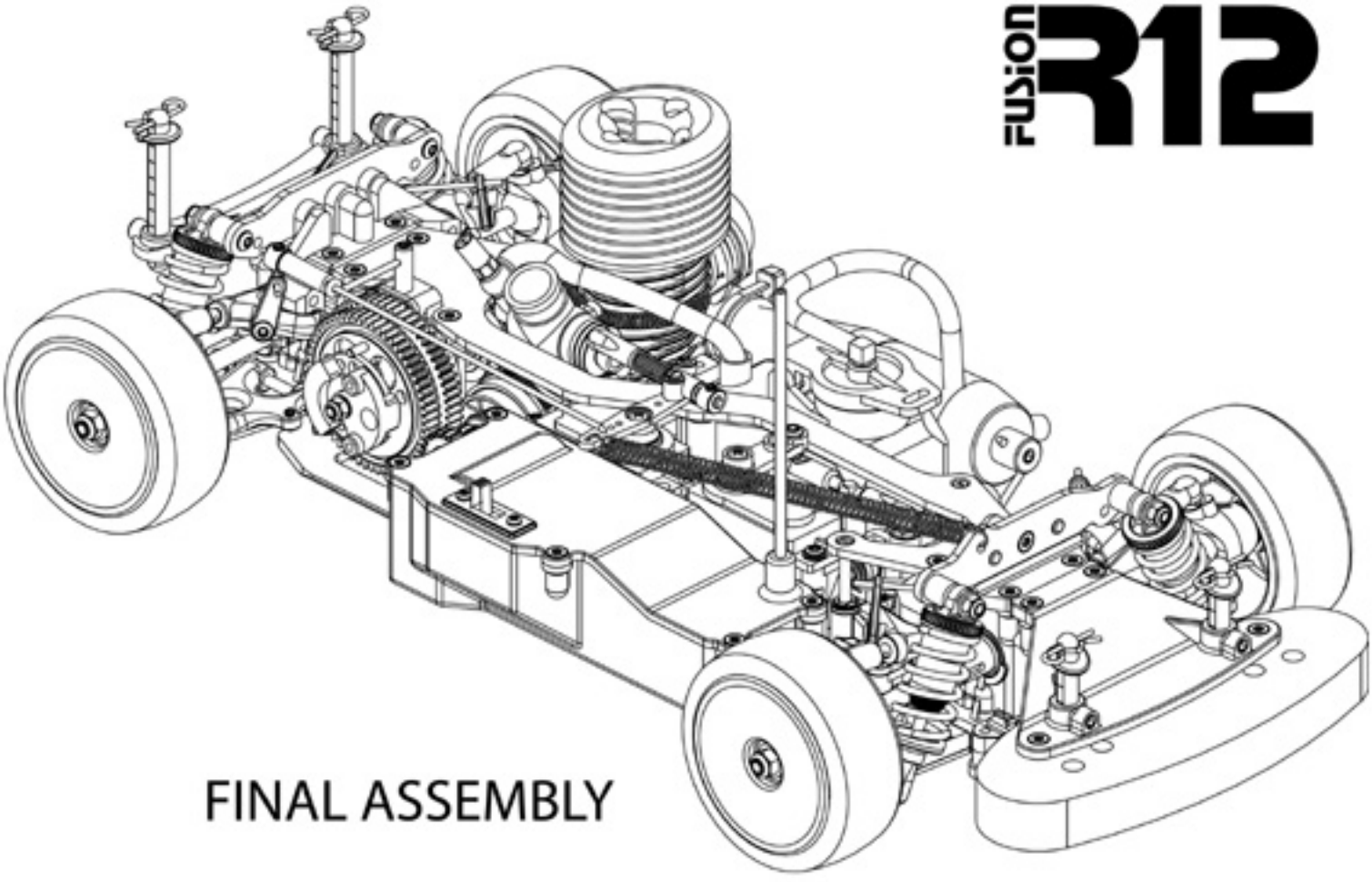

FINAL ASSEMBLY

Carefully cut away the shaded areas. Then, using a file or some abrasive paper, smooth the cut edges. Any ragged edges or score lines may cause the bodyshell to crack or split when in use. The body shape of your car may differ slightly from the one pictured.

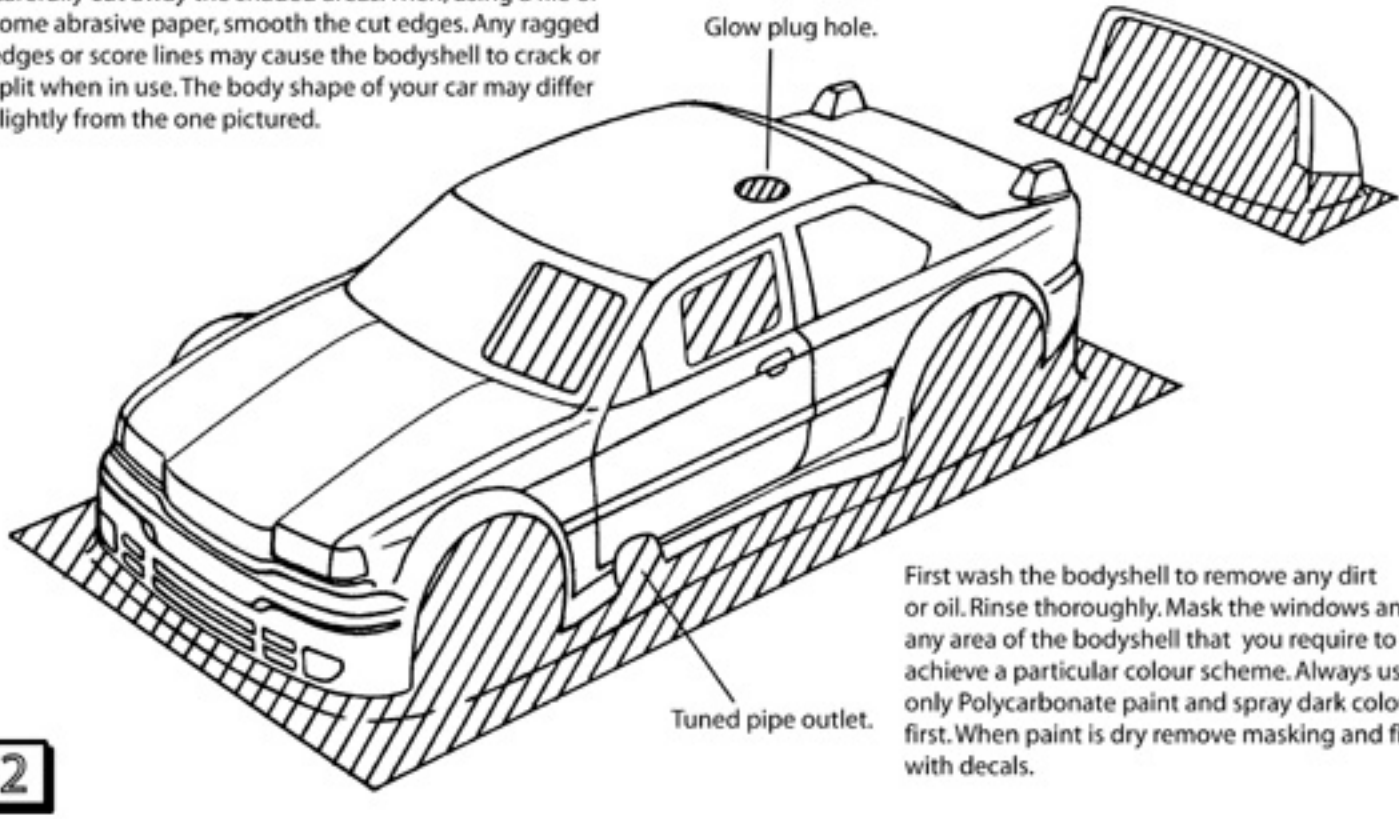

First wash the bodyshell to remove any dirt or oil. Rinse thoroughly. Mask the windows and any area of the bodyshell that you require to achieve a particular colour scheme. Always use only Polycarbonate paint and spray dark colours first. When paint is dry remove masking and finish with decals.

TRANSMISSION SETTINGS

1

Change up point to 2nd gear.

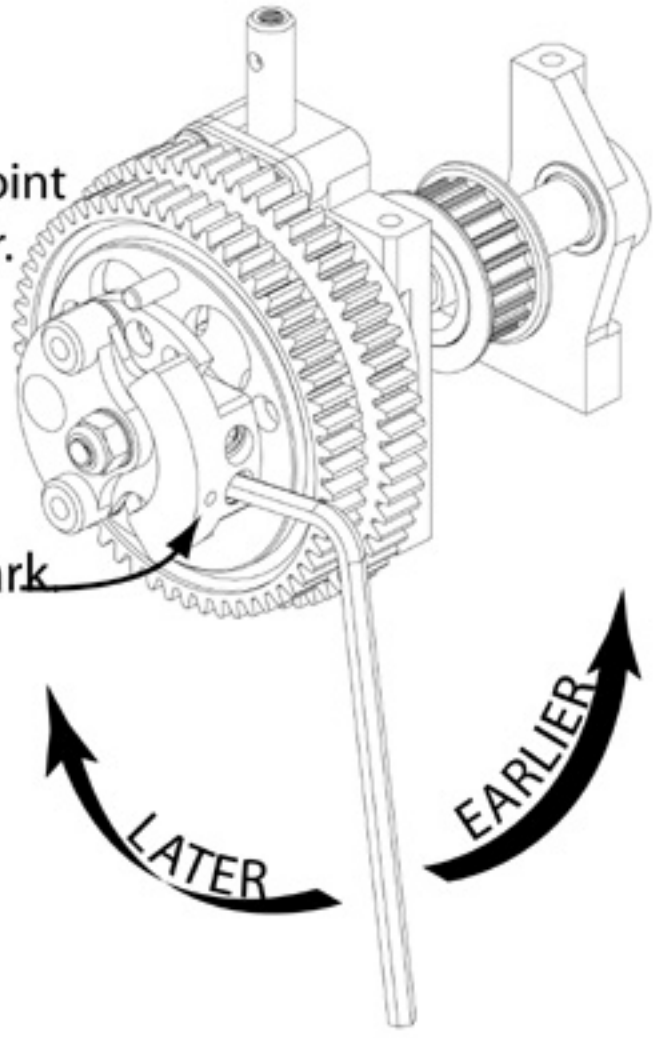

By increasing and decreasing the spring tension using the adjustment screw, you can alter the point at which the transmission changes from 1st to 2nd.

If you require the transmission to change into 2nd gear later, tighten the adjusting screw in 1/4 turn increments, until you achieve the right change point. If you want the

---

2

Engine braking release point.

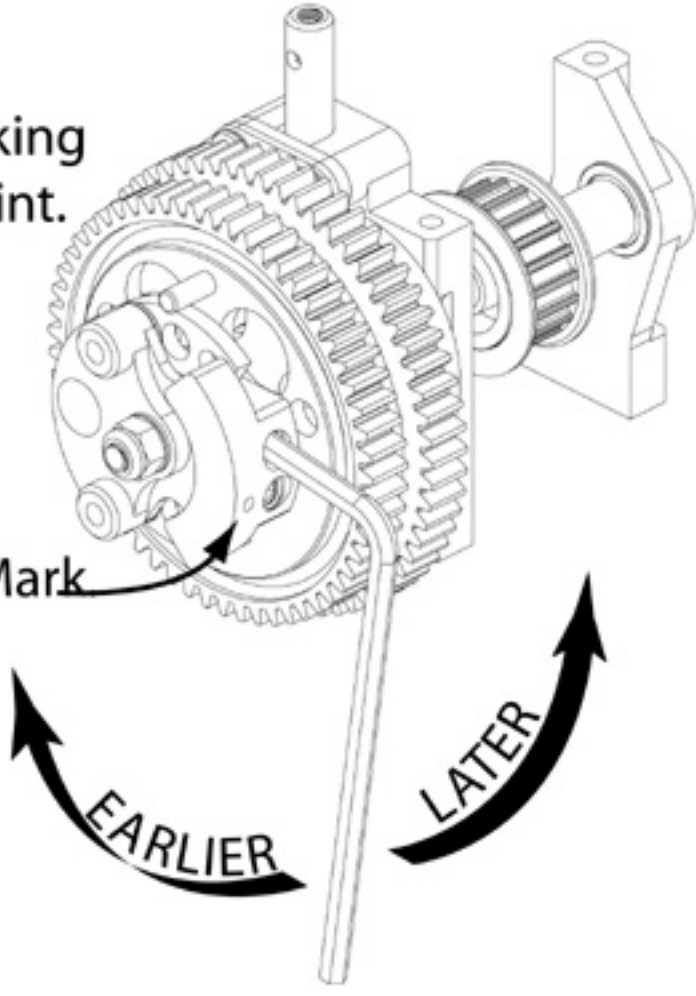

The engine braking adjustment, controls the amount of time for which the car has the natural braking effect of the engine when off power.

When the adjustment screw is tight the engine will disengage early, so that the car free wheels off power. Loosen this screw to delay the engine braking period. At its loosest setting the engine will remain engaged

REAR TOE-IN/OUT (Out-board)

The rear toe-in is set by adjusting the turnbuckles at the rear of the car.

Toe-In = A less than B
Toe-Out = A greater than B

2.5° toe-in each side is a good standard setting. This offers a good level of rear grip.

Reducing the rear toe-in offers better steering response and more straight line speed, but less stability

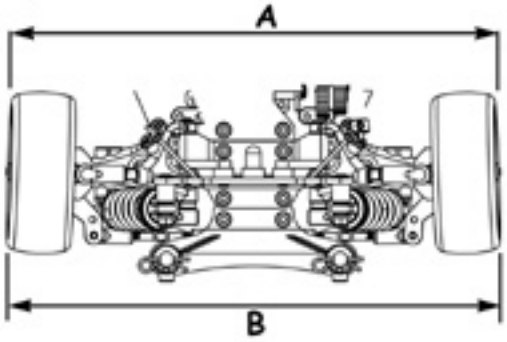

REAR TOE-IN (In-board)

The rear In-Board Toe-In is set by fitting the pivot blocks (see page 5❶). With the ridge facing in or out.

Facing in = 2° Toe-In
Facing out = 0° Toe-In

0° Toe-In each side is the standard setting.
2° Toe-In each side offers better rear end grip, but less steering response.

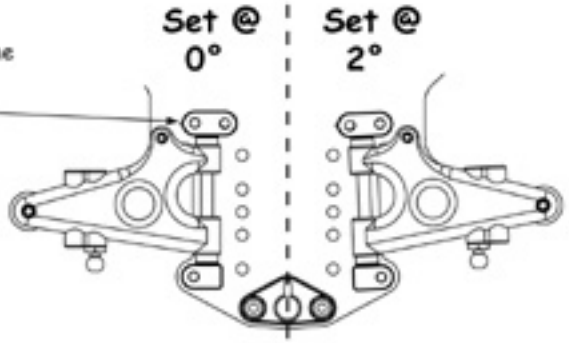

ANTI SQUAT & SUSPENSION DROOP

The car has 0° anti squat as standard. More anti squat will give more on power traction, but less off power traction, however too much will make the car unstable when turning into high speed corners. With 0° anti squat the steering will be precise & positive. On slippery tracks add anti squat.

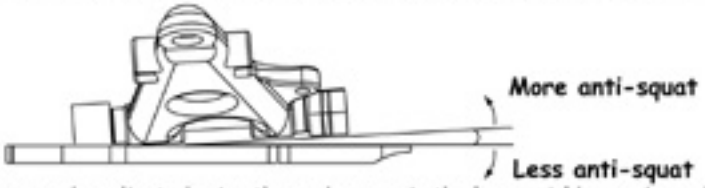

The suspension droop can be adjusted using the grub screw in the lower wishbones. Less droop improves steering response. More droop increases rear grip.

RIDE HEIGHT

In general always run the car as low as possible, without the chassis grounding out, as it rolls into corners.

Run the front 0.5mm to 1.0mm lower than the rear, to give more steering.

A good starting point is 5.5mm at the front and 6.0mm at the rear.

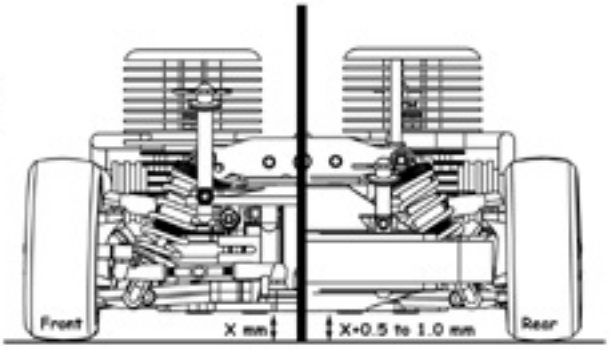

WHEELBASE (set on REAR wishbones)

The length of the wheelbase is set by fitting the spacers "G" (see page 5❶). In different positions.

In front of the wishbone = Long. Either side of the wishbone = Medium. Behind the wishbone = Short

Use spacers to maintain the wheelbase length after adjusting the Castor or Toe-In/Out.
In general a longer wheelbase will offer more steering.

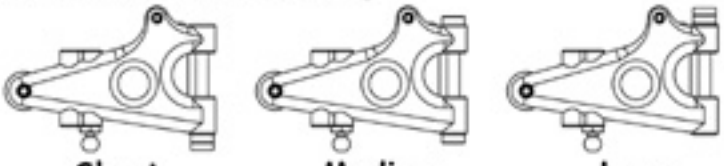

Schumacher

FUSION R12

TRACK SETTINGS AND GEAR RATIO CHARTS

OVERALL RATIOS

1.9 : 1 INTERNAL RATIO

	61	60	59	58	57
18	6.44	6.33	6.23	6.12	
19	6.10	6.00	5.90	5.80	5.70
20	5.80	5.70	5.61	5.51	5.42
21	5.52	5.43	5.34	5.25	5.16
22	5.27	5.18	5.10	5.01	4.92
23	5.04	4.96	4.87	4.79	4.71
24	4.83	4.75	4.67	4.59	4.51
25		4.56	4.48	4.41	4.33

TOOTH SUM

Maximum Tooth Sum = 85
Minimum Tooth Sum = 76

	61	60	59	58	57
18	79	78	77	76	
19	80	79	78	77	76
20	81	80	79	78	77
21	82	81	80	79	78
22	83	82	81	80	79
23	84	83	82	81	80
24	85	84	83	82	81
25		85	84	83	82

GEAR RATIOS

When choosing your gear ratios the tooth sum (see above) of 1st and 2nd gears must be equal.

e.g. 1st gear 61 spur and 21 pinion total tooth sum = 82 (61+21). Therefore, the 2nd gear ratio must also have a total tooth sum that equals 82. You can then choose how large or small a jump in gear ratio (between 1st and 2nd) you require, using the ratios avaiable to you.

Schumacher

FUSION R12

TRACK SETTINGS

FRONT TOE-IN (Out-board)

The front toe-in is set by adjusting the steering trackrod turnbuckles.

Toe-In = A less than B
Toe-Out = A greater than B

Toe-in will give a more stable car, but will give less sharp turn in. We recommend to start at about 1° each side. Maximum 2° each side.

Toe-out will give the opposite, less stability with sharper turn in to the corners.

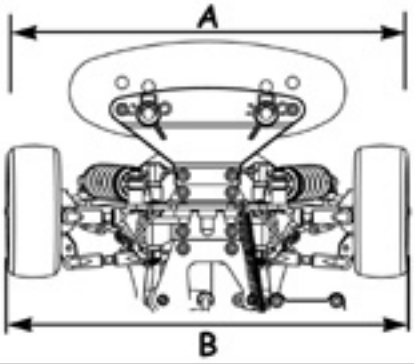

FRONT TOE-OUT (In-board)

The front In -board toe-out is set by fitting the front strap (see page 7 ❶) with the 2° mark up or down.



2° mark showing (up) = 0°.
2° not showing (down) = 2° toe-out.

With the In-board position set to 2° the steering will be smooth and progressive, when set to 0° the steering is more aggressive.

SPRINGS

The spring rate controls the suspension stiffness.
Fit spring spacers only to change the ride height. They DO NOT alter the suspension stiffness. On slippery or bumpy tracks use soft to medium rate springs, on flat or high grip tracks run medium to hard rate springs.

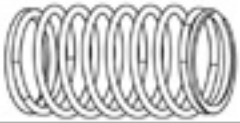

FRONT CASTOR

The front castor can be altered by moving the two washers on the top wishbone pivot pin. Less castor will give a quicker steering response, but could lead to power on understeer. More castor will give the opposite, slightly slower turn in, but more power on steering.

11° = 2 washers at rear.

8.5° = 1 washer each side.

6° = 2 washers at front.

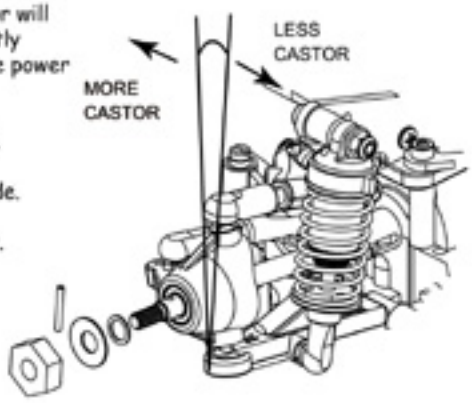

LOWER SHOCK POSITION

Inner (standard) position is best for most tracks & conditions. The outer position is good on VERY high grip tracks.



SHOCK BRACKETS



Vertical shock absorbers make the car react sharply to driver inputs. A laydown shock offers a softer feel to the driver.

HUB CARRIER

Position 1 offers an aggressive initial steering response. Position 2 (standard) offers a softer initial steering response.



Use hole 1 for a faster, more aggressive steering response and more lock. Use hole 2 for smoother more proprtional steering. Hole 2 is generally better on high grip tracks.

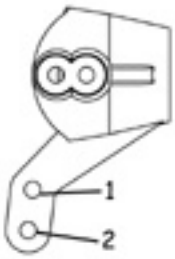

UPPER SUSPENSION MOUNT



The upper (standard) hole makes the car smooth and predictable. The lower hole can offer better grip, but with a much less predictable breakaway.

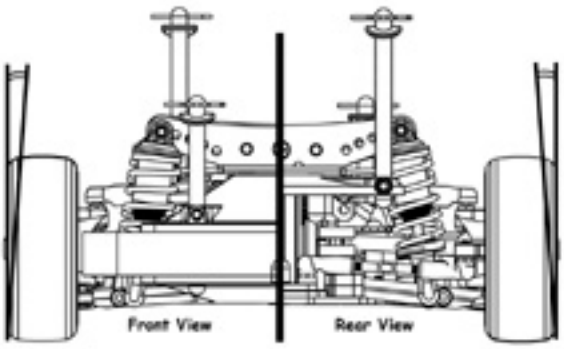

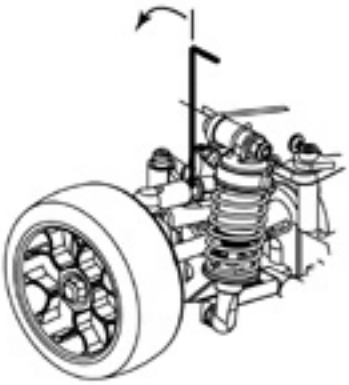



FRONT & REAR CAMBER

Car as standard will have 4° negative camber (the top of the wheels lean inward). Set the camber to 1° negative by adjusting the top wishbone turnbuckle. To reduce camber look at wheel face on & turn allen key anti-clockwise as shown above - This is the same for all four wheels. With maximum camber (4°) the car will have high levels of grip, but there may be the possibility of sudden breakaway in corners. Reducing the camber gives a more progressive slide, but may give less grip. See set up sheet.

WARNING

Please read this.....

Schumacher

FUSION R12

The following information is very important to the performance and reliability of your Schumacher Nitro Car. Please read it!

1. Read the information in the instruction manual fully.

2. ALWAYS drive your car in a safe place away from public roads and be aware of any people or animals near you. MODEL CARS CAN BE DANGEROUS!

3. Always ensure the transmitter & receiver batteries are fully charged, or new, before use.

4. If running the car in wet conditions make sure that you fully waterproof your electrical equipment and clean and dry the car after use.

5. Learn to use your power with respect. Very few surfaces can cope with full power. If you use full power everywhere you WILL break things!

6. Always ensure that all nuts and screws are tight.

7. Always ensure gear mesh and differential adjustments are correct.

8. Check the engine manufacturers instructions for fuel recommendations and running-in procedures.

9. NEVER run the engine without the air filter fitted.

10. Don't run the car at full throttle with the wheels off the ground, the engine WILL blow up in a matter of seconds.

11. This car is designed for use on surfaces free of debris, otherwise transmission damage may occur.

GUARANTEE:
All parts are guaranteed against defect in manufacture. Conditions of use of this product are out of our control and therefore we cannot guarantee parts against failure in use. This is a high performance model racing car, if used without due respect failure could occur. If you have any problems with this product your first point of contact should be the place of purchase.

S1060

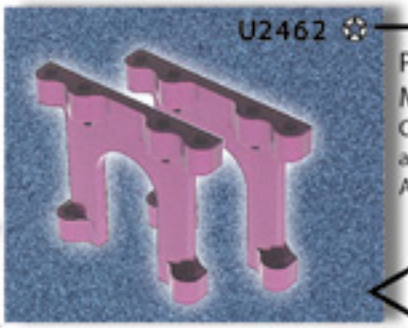

U2462

Purple Alloy Diff Mounts (pr).
CNC Machined, offers accurate diff location. And added strength.



U2163

Purple Alloy Hub Carriers.
CNC Machined, to offer more strength and precise bearing fit.

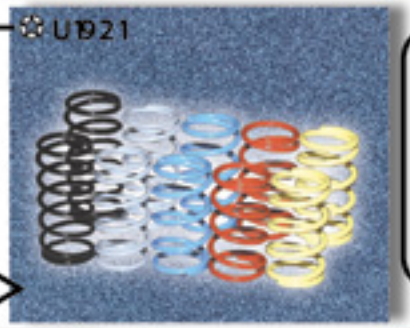

U1921

Spring Tuning Set (5 pairs).
Set up your MISSION to suit the track conditions with this set of colour coded springs.



U2251

Kwik Klips (Pk8)
Replaces the 2mm spacers for fast castor adjustment. (Includes 1mm & 2mm)

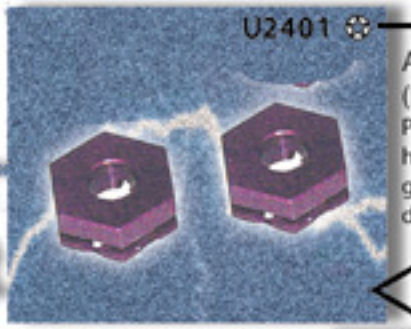

U2401

Alloy Wheel Hex (Pk2).
Purple Alloy wheel hexes that offer greater strength and durabilty.



U1818

Alloy Shock Seal Housings (pr).
Purple CNC housing, Offers strength and a super smooth operation.

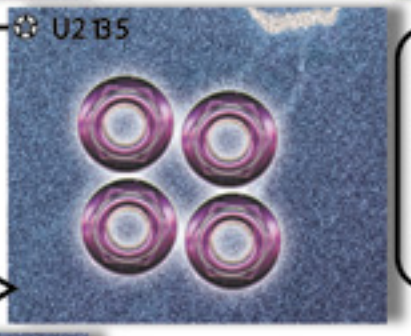

U2135

Purple Alloy M4 Nyloc Wheel Nuts.
Lightweight flanged wheel nuts in funky purple!

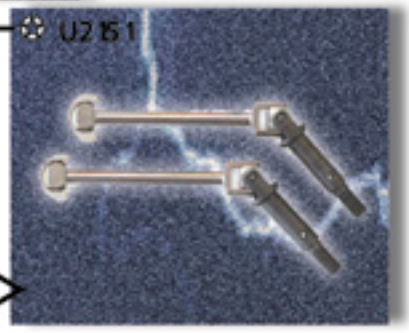

U2151

Steel Driveshafts (pr).
Metal U.J.s that are stronger, but still feature Schumachers revolutionary blade drive system.

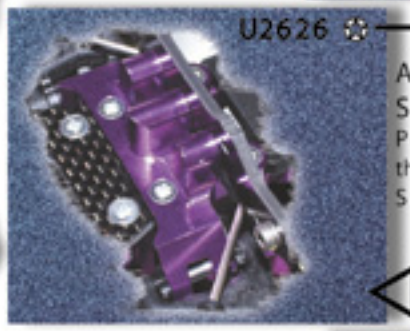

U2626

Alloy Upper Suspension Mount.
Purple Alloy version of the standard kit spec. Stronger and PURPLE!

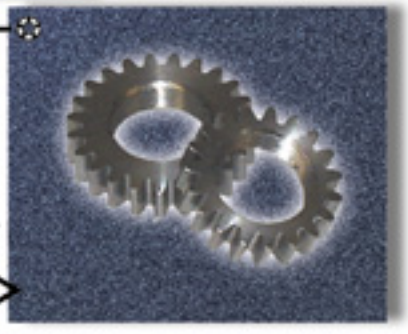

Option Gearing.
Optional pinion and spurs gears from 19t to 25t (pinion) and 57t to 61t spurs. Check out numbers U2612 - U2623.

Schumacher

racing-cars.com

Schumacher Racing Products Ltd.
71-73 Tenter Road ~ Moulton Park
Northampton ~ NN3 6AX ~ UK
Tel: +44(0) 1604 790770 ~ Fax: + 44(0) 1604 790209

Schumacher U.S.A. Inc.
6302 Benjamin Road ~ Suite 404
Tampa ~ Florida ~ 33634 ~ USA
Tel: (813) 889 9691 ~ Fax: (813) 889 9593