# MENACE 2.1

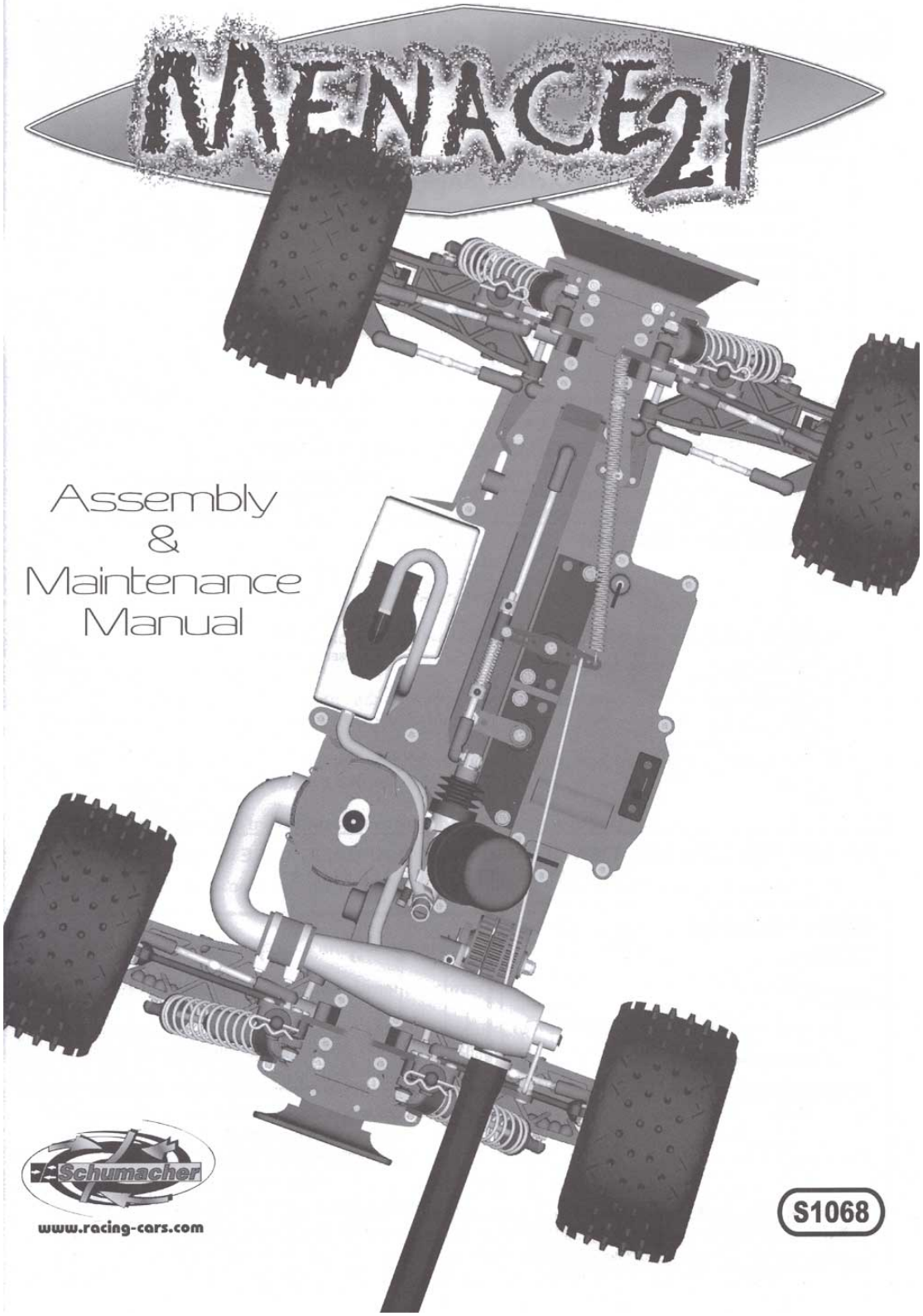

Assembly
&
Maintenance
Manual

Schumacher

www.racing-cars.com

S1068



Schumacher

MENACE 21

## IMPORTANT SAFETY NOTES

1. This product is not suitable for children under 14 years of age unless supervised by an adult.
2. Select an area for assembly that is away from reach of small children. The parts are small and can be swallowed by children causing choking and possible internal injuries.
3. Shock fluids, grease and adhesives should be kept out of children's reach. They are not toxic, but were not intended for human consumption.
4. Exercise care when using any hand tools, sharp instruments and power tools during construction.
5. Carefully read all manufacturers warnings and cautions for any glues or paints that may be used for assembly purposes.

*Do not use excessive force when tightening the self-tapping screws, or you may strip the thread in the plastic. It is recommended to stop tightening it when the threaded part on the screw goes into the plastic part and you feel some resistance from the tightening. Screws can be made easier to tighten if a drop of oil is used.*

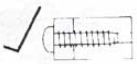

*Good*

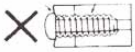

*Over tighten and may strip the thread in the plastic*

### *ADDITIONAL ITEMS REQUIRED*

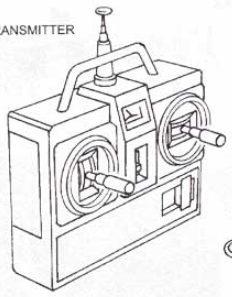

TRANSMITTER

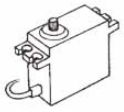

STEERING SERVO

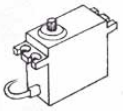

THROTTLE SERVO

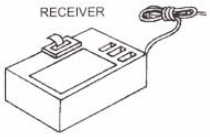

RECEIVER



GLOW START



ALKALINE "AA" CELLS (FOR RADIO CONTROL)




SEE WARNING SHEET

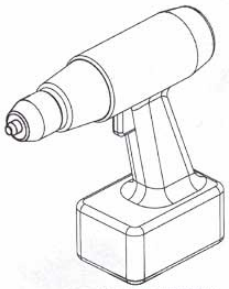

CORDLESS TORQUE DRILL
500 RPM Minimum

**FOR BEST PERFORMANCE, IT IS VERY IMPORTANT THAT GREAT CARE IS TAKEN TO ENSURE THE FREE MOVEMENT OF ALL PARTS.**

### ADDITIONAL TOOLS REQUIRED

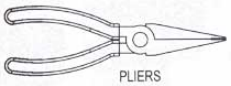

PLIERS

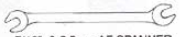

7/16" & 5.5mm AF SPANNER

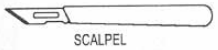

SCALPEL



FILE



NUT DRIVERS 5.5mm & 7mm

GLOW PLUG SPANNER

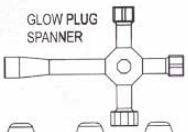

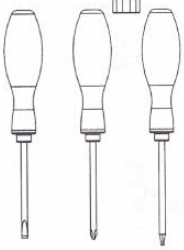

FLAT BLADED, POZI and TORX T10 SCREWDRIVERS recomended, TORX allen key is included.

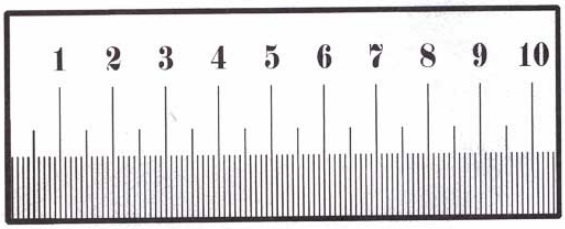


In line with our policy of continous development the exact specification of the kit may vary.
In the unlikely event of any problems with your kit please contact the model shop where you purchased it.

Schumacher

MENACE 2.1

## RADIO INSTALLATION
Parts required:

A — M3 x 12mm Csk TORX Head x 8

B — M3 x 10mm Csk TORX Head x 1

## 1 Remove Radio Box

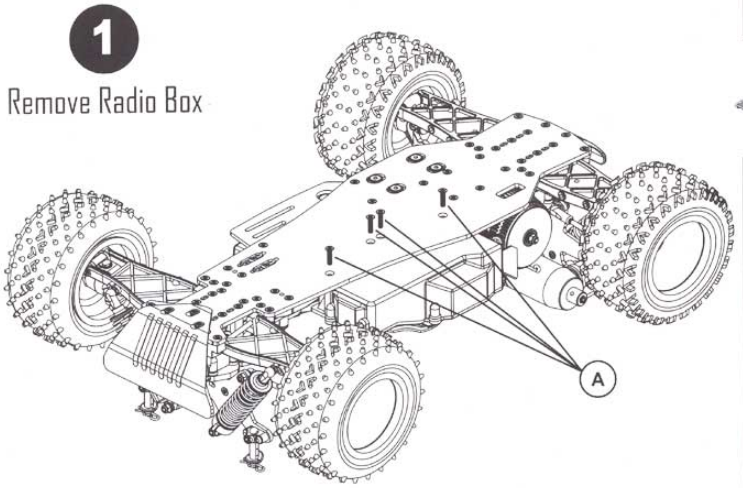


## 2 Remove Lid

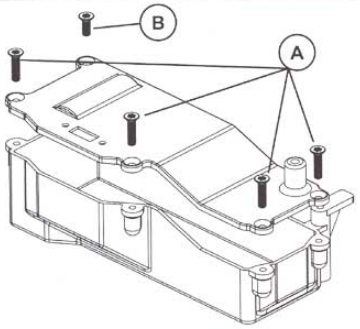


## 3 Assemble Radio Switch

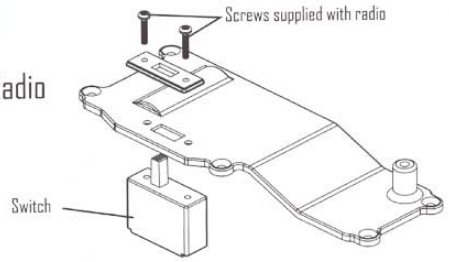


## 4 Install Receiver Battery & Receiver

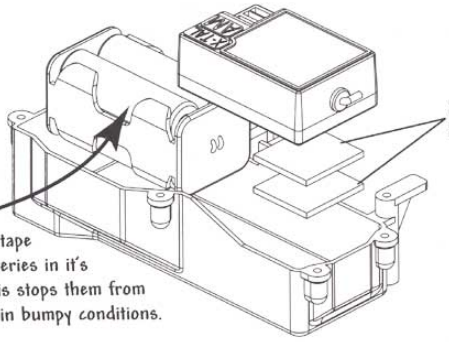


Track Tip
Wrap electrical tape around the batteries in it's battery box. This stops them from vibrating loose in bumpy conditions.

## 5 Install Servos

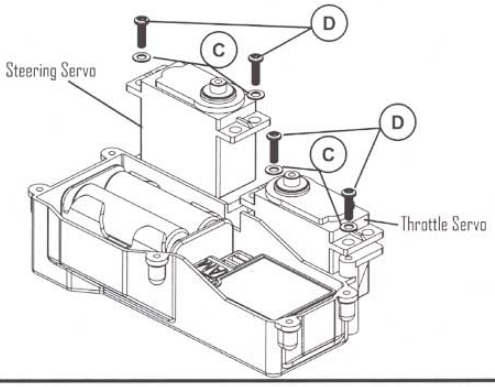


## 6

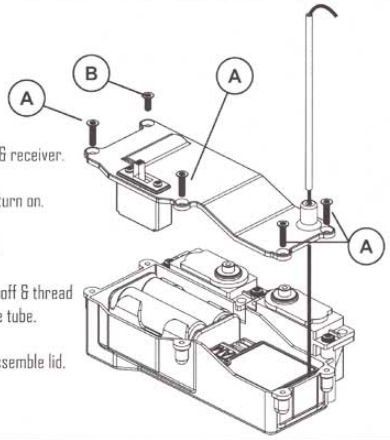


Connect up servos, battery, switch & receiver.

Install batteries into transmitter & turn on.

Set trims on transmitter to neutral.

Test both servos work. Then switch off & thread aerial wire through the lid & into the tube.

Arrange wires into the radio box. Assemble lid.

## 7

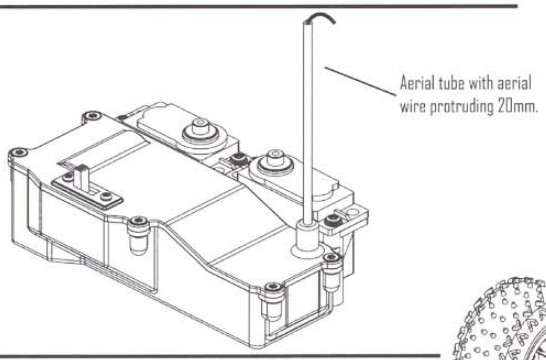


Secure lid to the box.

Re-test to ensure the servos work.

## 8

Reassemble radio box to car.

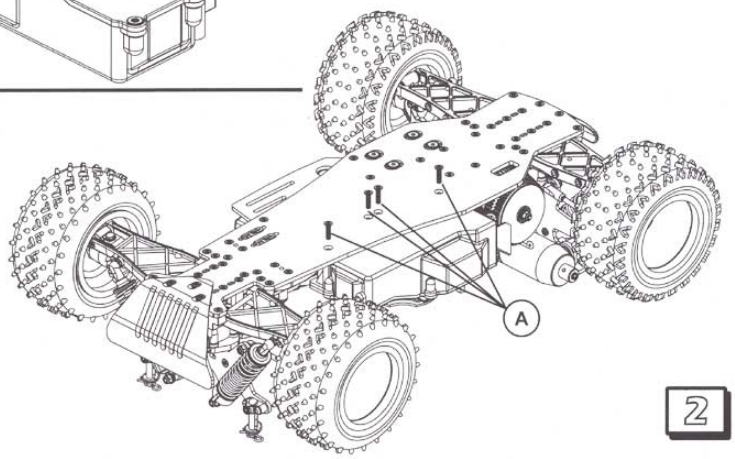


Schumacher

MENACE 2.1

## RADIO INSTALLATION Continued

A — M3 x 12mm Csk TORX Head x 8

B — M3 x 10mm Csk TORX Head x 1

C — M3 Steel Washer x 4

D — M3 x 10mm Pan TORX Head x 4

Schumacher

MENACE 2.1

## STEERING LINK
## Parts required:

A — M3 Nyloc Nut x 1

B — Ball Stud Short M3 x 1

**1**

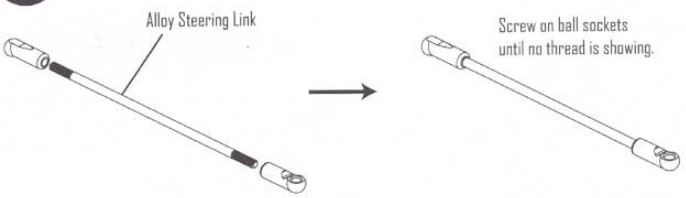


**2**

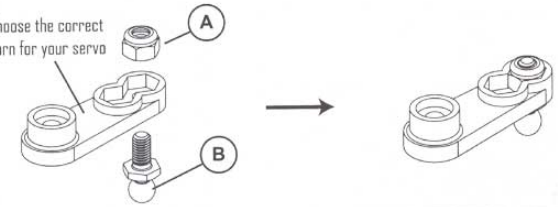


**3**

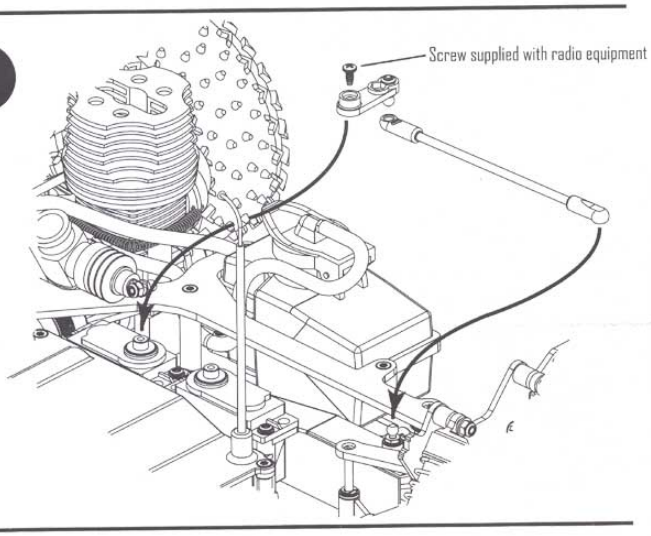


**4**

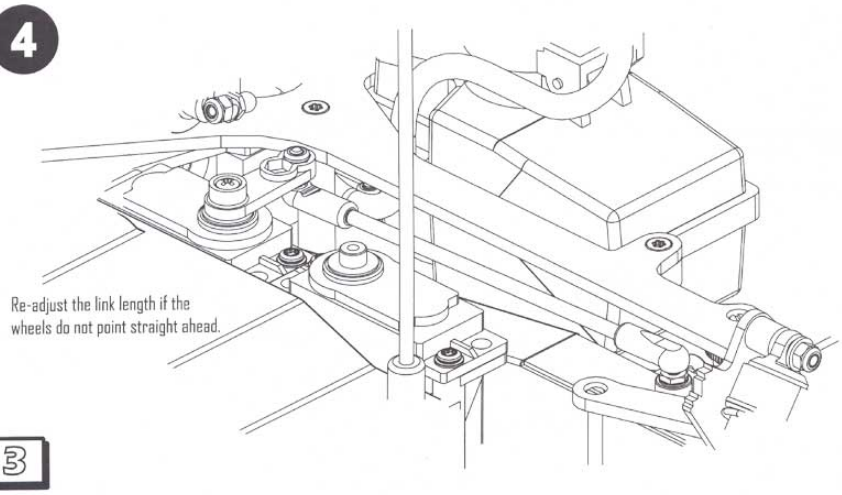

Schumacher

MENACE 2.1

# THROTTLE & BRAKE LINK

## Parts required:

A — Ball Socket x 1

B — No2 3/8 Pan Head x 1

C — Collar & grub screw x 2

**1**

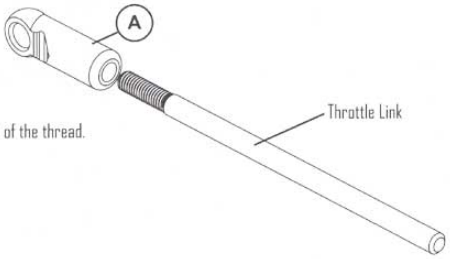


Screw on up to the end of the thread.

**2**

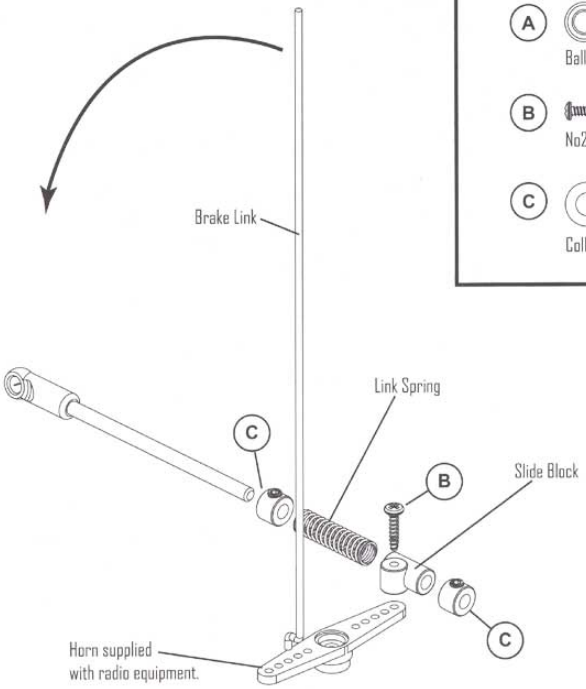


**3**

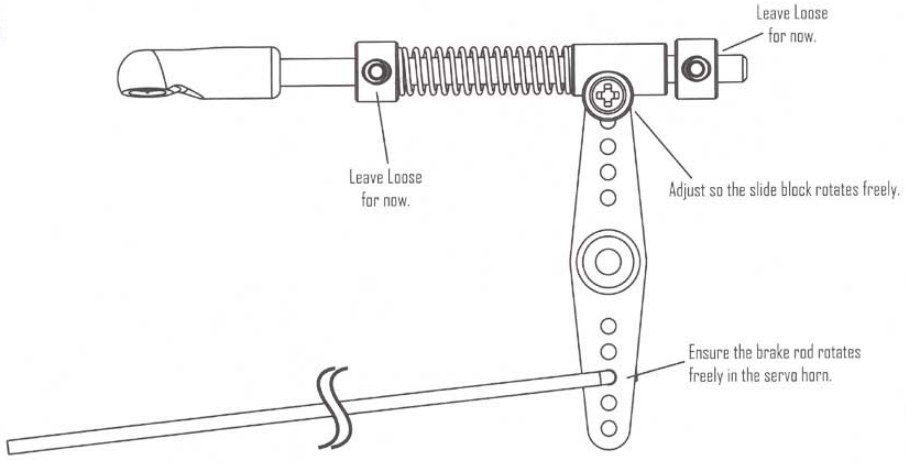

Schumacher

MENACE 2.1

## 4

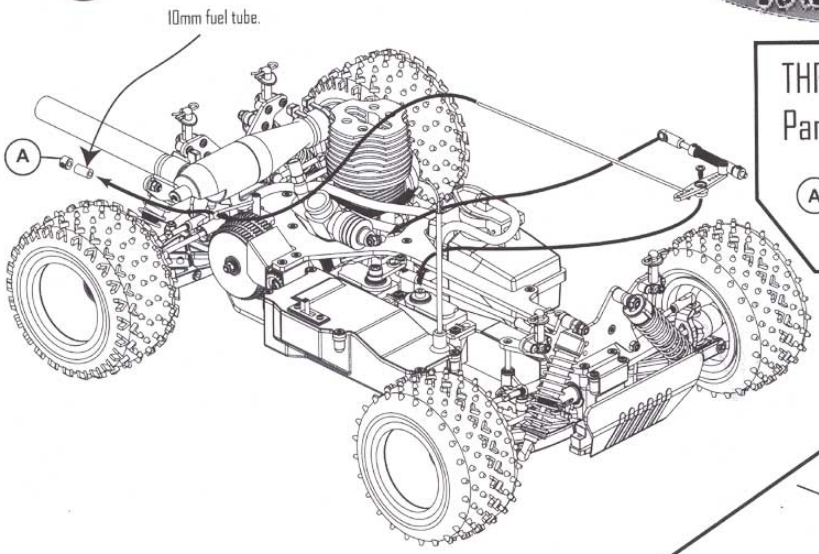


THROTTLE & BRAKE
Parts required:

A Collar & grub screw x 1

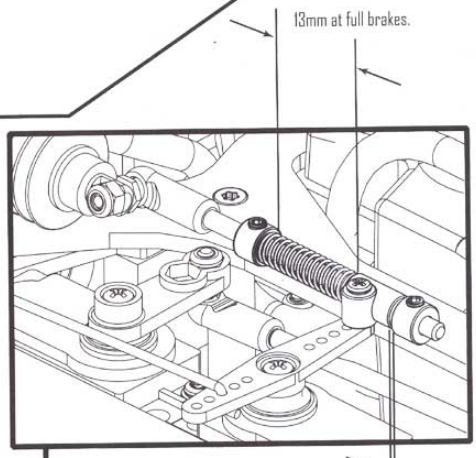


## 5

Radio
Adjustments

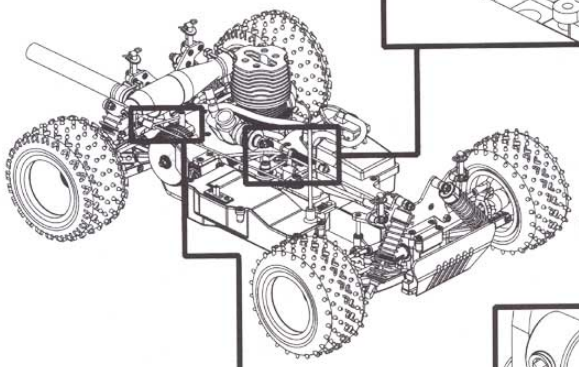

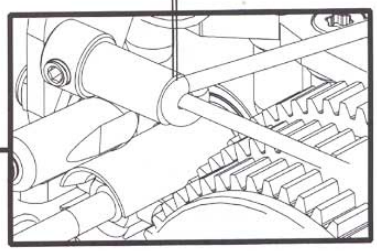

Schumacher

MENACE 21

# SAFETY RETURN SPRING INSTALLATION

**1**

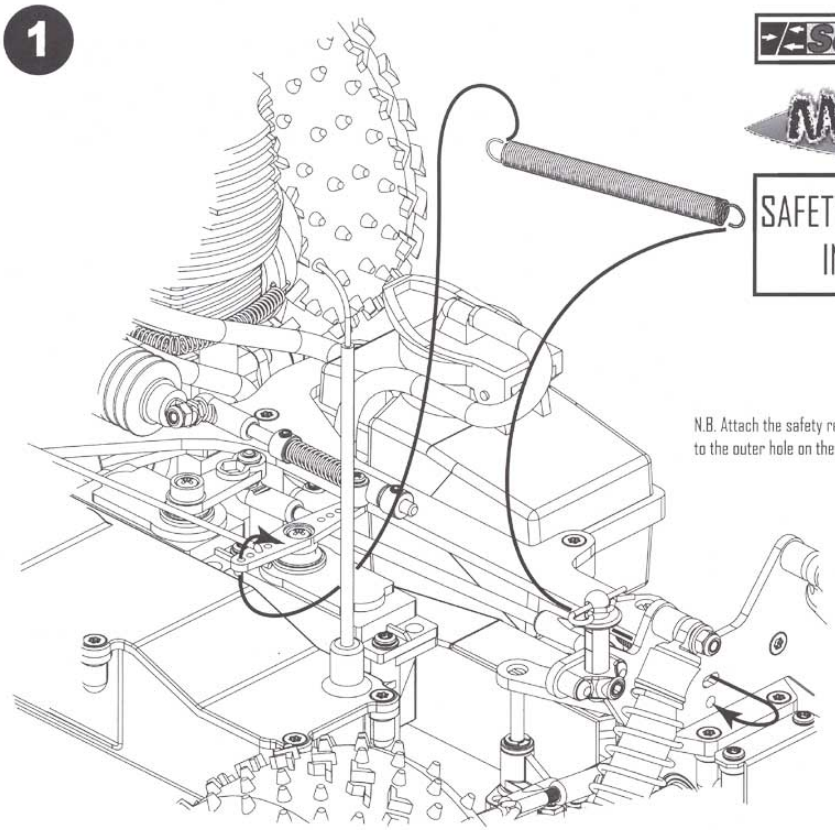

N.B. Attach the safety return spring to the outer hole on the servo horn.

**2**

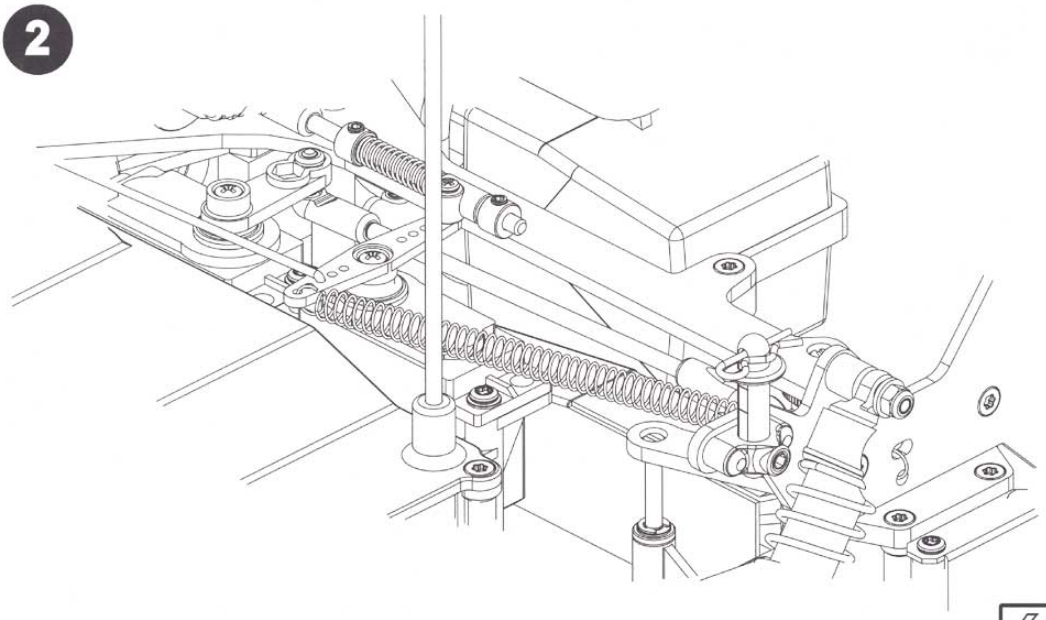

Schumacher

MENACE 21

# FITTING AIR FILTER

**1**

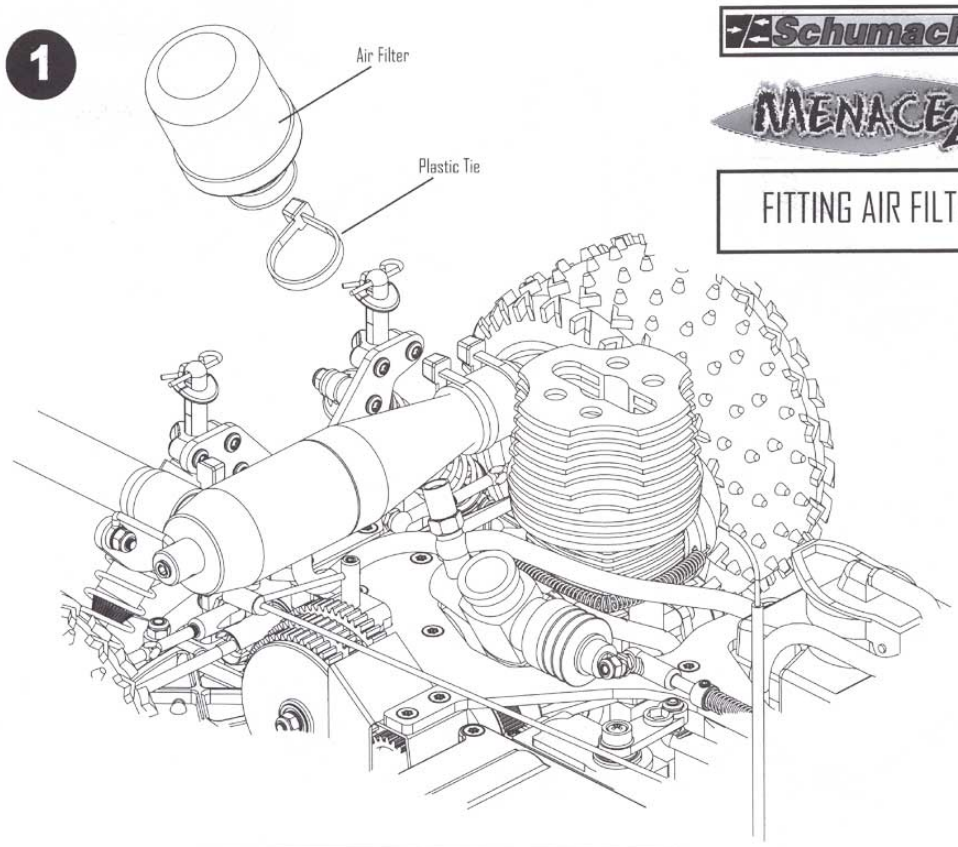


**2**

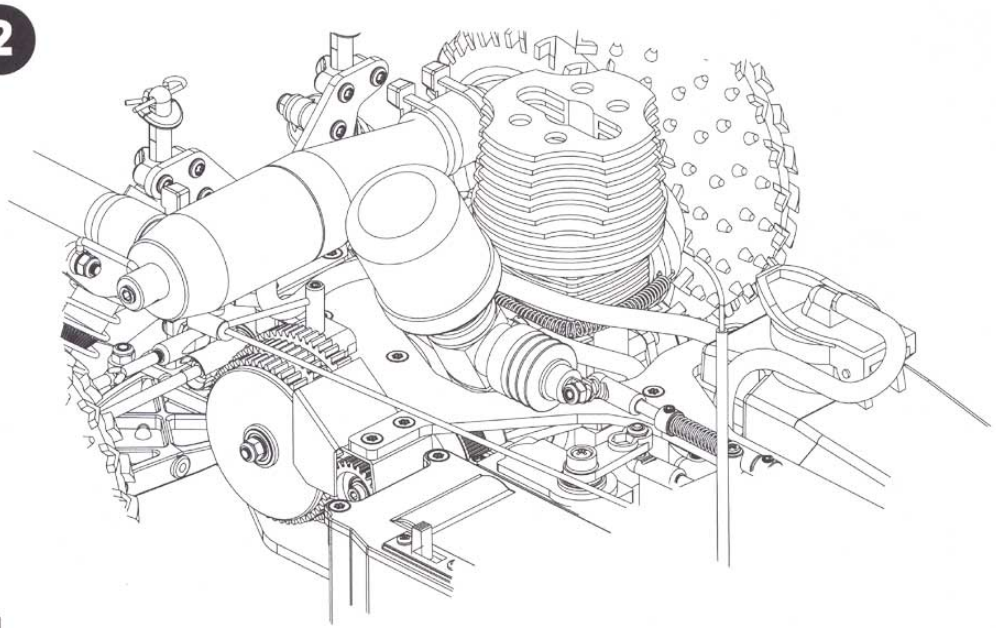

Schumacher

MENACE 21

## STARTING THE ENGINE

### 1 SET UP DRILL

After charging your drill, insert the "e-start" adaptor **(ball end out)** and tighten the chuck.
ENSURE THE DRILL ROTATES CLOCKWISE.

Set the torque setting to the lowest possible setting, that will turn the engine over.

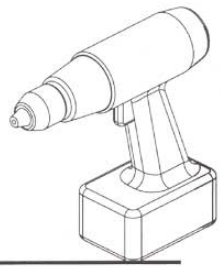

### 2 FILL FUEL TANK

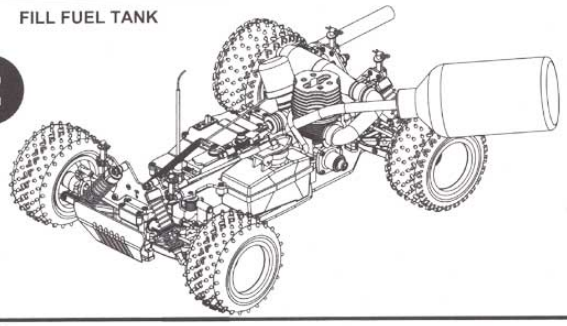

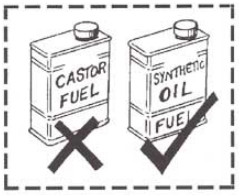


**WE STRONGLY RECOMMEND DYNA-GLOW 10/16 OR BLUE THUNDER 10/16 FUEL**

### 3 PRIMING ENGINE

TURN ON TRANSMITTER.
SWITCH ON RECEIVER.
ENSURE BATTERIES ARE FULLY CHARGED.

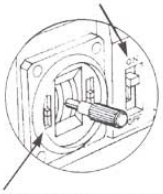

ENSURE THROTTLE TRIM IS AT NEUTRAL. CHECK THROTTLE, BRAKE & STEERING ACTION.

**With the drill STATIONARY**
INSERT ball end INTO "e" START.
Turn on drill and watch for the fuel to enter the carb. Then keep going for 3 seconds more.
The engine is now primed.

CLOSE OFF EXHAUST WITH FINGER.

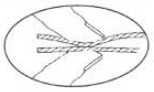

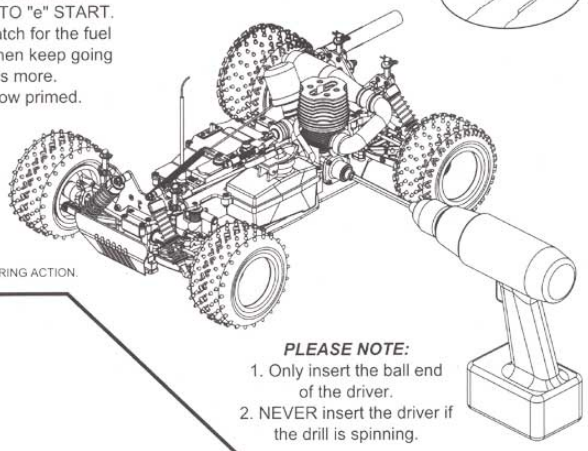

***PLEASE NOTE:***
1. Only insert the ball end of the driver.
2. NEVER insert the driver if the drill is spinning.

### 4 STARTING ENGINE

HOLD GLOW START ONTO PLUG

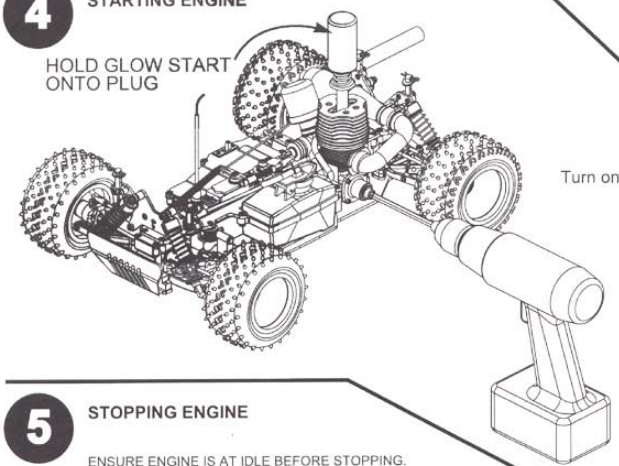

Turn on drill until the engines starts!

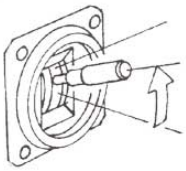

### 5 STOPPING ENGINE

ENSURE ENGINE IS AT IDLE BEFORE STOPPING.
Stop engine by blocking exhaust.

Pull out drill and gently rev the engine, then remove the glow clip.

**WARNING:**

**ENGINE AND TUNE PIPE WILL BE VERY HOT DO NOT TOUCH FOR SEVERAL MINUTES**

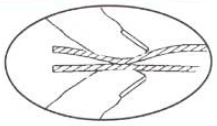

# ENGINE SETTINGS

Schumacher

MENACE 21

## SETTING IDLE SPEED

TRANSMITTER - ZERO/NEUTRAL



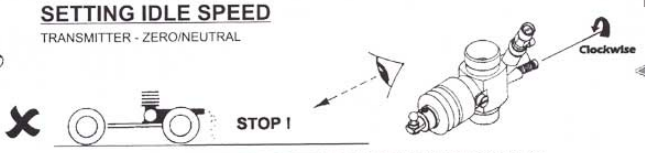


ENGINE STALLS = SCREW IN THROTTLE STOP SCREW TO INCREASE REVS




CAR DOES NOT MOVE AND SOME SMOKE = OK

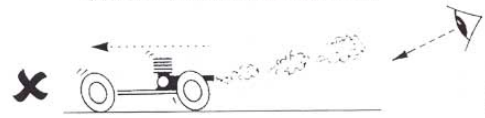

CAR EDGES FORWARD = UNSCREW THROTTLE STOP SCREW TO LOWER REVS




**IDLE SPEED SETTING**

0.25mm to 0.50mm Slide Open

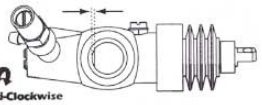

SET IDLE SPEED AS HIGH AS POSSIBLE WITHOUT CAR EDGING FORWARD

## SETTING LOW SPEED MIXTURE

TRANSMITTER - STOP-GO (MAX ACCELERATION)

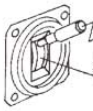

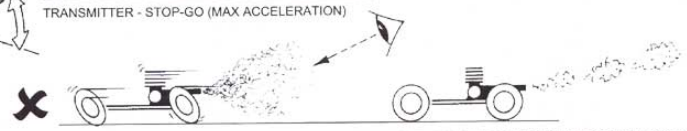

TOO MUCH SMOKE AND SLOW ACCELERATION = SCREW IN LOW SPEED MIXTURE SCREW (TOO RICH)

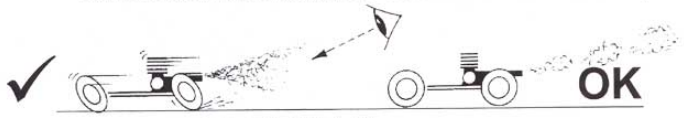


SOME SMOKE AND GOOD ACCELERATION = OK

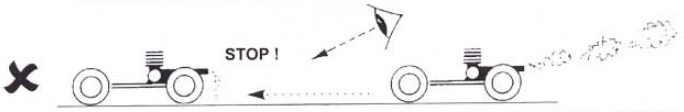


CAR EDGES FORWARD AND THEN STALLS = UNSCREW LOW SPEED MIXTURE SCREW (TOO LEAN)

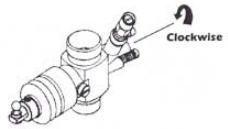




0.40mm in, to 0.40mm out from flush

**LOW SPEED MIXTURE SETTING**




## SETTING HIGH SPEED MIXTURE

TRANSMITTER - MAX FULL SPEED

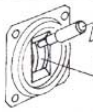

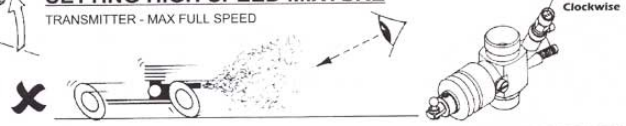


TOO MUCH SMOKE AND SLOW SPEED = SCREW IN HIGH SPEED MIXTURE SCREW (TOO RICH)




SOME SMOKE AND GOOD SPEED = OK

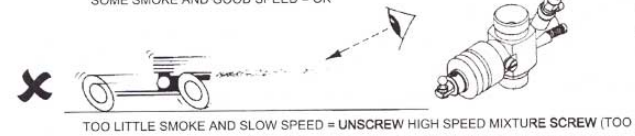

TOO LITTLE SMOKE AND SLOW SPEED = UNSCREW HIGH SPEED MIXTURE SCREW (TOO LEAN)

**HIGH SPEED MIXTURE SETTING**

1½ Turns Open to 2½ Turns Open from fully closed.

**WARNING:** IF CAR BEGINS TO LOSE PERFORMANCE AFTER A FEW MINUTES IT IS PROBABLY **OVERHEATING** AND YOU **MUST STOP** AND UNSCREW HIGH SPEED MIXTURE SCREW 90°

**N.B. The settings given are for a starting point only.**
**SMALL adjustments may be required depending on conditions.**

**DO NOT** ALLOW THE NOISE TO ANNOY OTHERS
**DO NOT** OPERATE THE "CAR" ON THE PUBLIC HIGHWAY
**DO NOT** OPERATE THE "CAR" IN A CONFINED SPACE OR CROWDED AREA
**DO NOT** RUN ENGINE WITHOUT AIR FILTER - SERIOUS DAMAGE WILL RESULT
**DO NOT** ALLOW THE TRANSMITTER OR RECEIVER BATTERIES TO RUN FLAT




## TROUBLE SHOOTING

**THE FOLLOWING INFORMATION WILL HELP SOLVE ANY PROBLEMS WHEN RUNNING AND MAINTAINING YOUR CAR**

| PROBLEM | CAUSE | REMEDY |
|---|---|---|
| ENGINE DOES NOT START | FUEL TANK EMPTY, ENGINE NOT PRIMED | FILL TANK AND REPRIME ENGINE |
| | FLAT GLOW BATTERY OR DEAD GLOW PLUG | RECHARGE BATTERY AND/OR REPLACE PLUG |
| | CLOGGED AIR FILTER | CLEAN OR REPLACE AIR FILTER |
| | OVER PRIMED, CYLINDER FLOODED WITH FUEL | REMOVE GLOW PLUG THEN TURN ENGINE OVER TO DISCHARGE FUEL |
| | INCORRECT CARBURETTOR ADJUSTMENT | CHECK SETTINGS |
| | INCORRECT LINKAGE ADJUSTMENT | RE ADJUST LINKS WITH SERVO IN NEUTRAL SEE MANUAL |
| | WORN ENGINE - PISTON LINER | REPLACE PISTON LINER |
| ENGINE STALLS | FUEL TANK EMPTY | FILL FUEL TANK |
| | CLOGGED AIR FILTER | CLEAN OR REPLACE AIR FILTER |
| | INCORRECT CARBURETTOR ADJUSTMENT | RE ADJUST CARBURETTOR SETTINGS |
| | ENGINE OVER HEATING | ALLOW ENGINE TO COOL DOWN AND OPEN HIGH SPEED MIXTURE SCREW 90° |
| POOR ENGINE RESPONSE | INCORRECT CARBURETTOR ADJUSTMENTS | RE ADJUST CARBURETTOR SETTINGS |
| | FUEL TANK PRESSURE PIPE LOOSE, DETACHED OR DAMAGED OR BLOCKED | REPLACE OR REFIT PRESSURE PIPE |
| | WORN ENGINE - PISTON LINER | REPLACE PISTON LINER |
| POOR CAR CONTROL | WEAK BATTERIES IN TRANSMITTER | RECHARGE OR REPLACE BATTERIES |
| | WEAK RECEIVER BATTERIES | RECHARGE OR REPLACE BATTERIES |
| | TRANSMITTER AERIAL NOT FULLY EXTENDED | EXTEND AERIAL |
| | POOR ADJUSTMENT OF LINKS | RE-ADJUST LINK TO INSTRUCTIONS |

## RUNNING ENGINE IN FROM NEW

TO ENSURE YOUR ENGINE HAS A LONG LIFE THE ENGINE NEEDS TO BE "RUN IN" BEFORE BEING "RACED". RUN THE CAR FOR 2 OR 3 TANK FULLS, AT A RICH CARB SETTING ON HALF THROTTLE, DO NOT USE FULL THROTTLE

## WARNING:

THE LIMITED SLIP DIFFERENTIAL DESIGN CAN BE DAMAGED BY CONTINUOUSLY SPINNING ONE REAR WHEEL OR BY SPINNING THE CAR ROUND IN " DONUTS" FOR TOO LONG. THE DIFFERENTIAL WILL ALSO BE DAMAGED IF IT IS ALLOWED TO SLIP WHILE DRIVING THE CAR. IF ANY SLIP OCCURS, STOP AND ADJUST IT BEFORE YOU DAMAGE IT

## IMPORTANT - REGULAR MAINTENANCE

CHECK DIFFERENTIAL ADJUSTMENT, CHECK ALL SCREWS ARE TIGHT, CHECK GEAR MESH ADJUSTMENT. OIL BEARINGS AND KEEP CAR CLEAN.



Schumacher

MENACE 2.1

## SHOCK ASSEMBLY
Parts required:

- (A) "E" clip x 8
- (B) Spacer x 4
- (C) Bobbin x 4
- (D) Seal Housing x 4

**1**

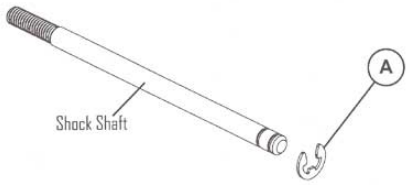


**2**

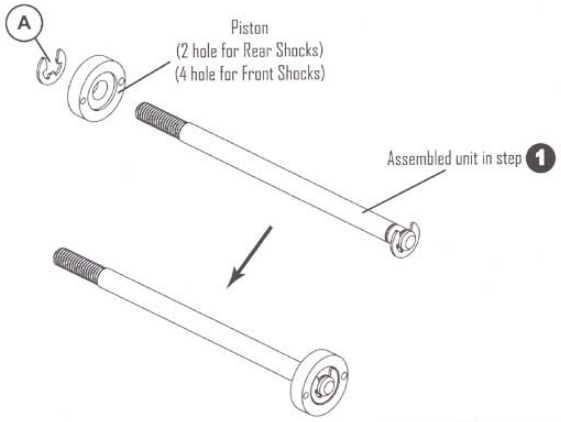


**3**

N.B.
Assemble 4 units.

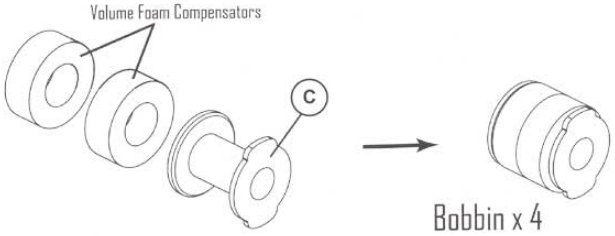


**4**

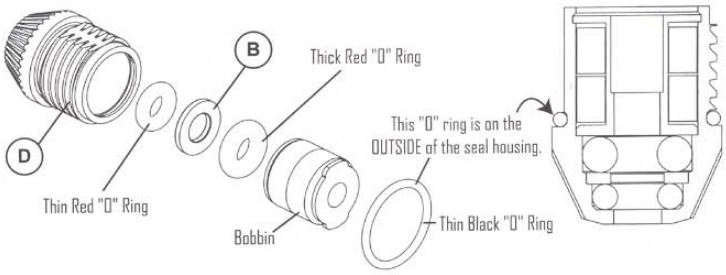

Schumacher

MENACE 2!

## SHOCK ASSEMBLY
Parts required:

(A) Ball Socket x 4

**5**




**6**

Fill shock body with oil to the bottom of the thread.

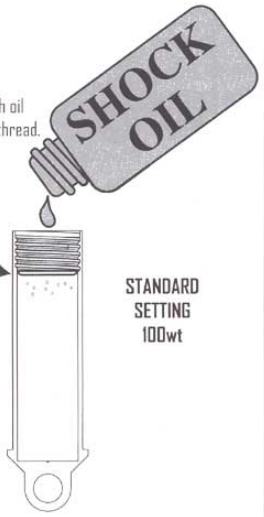


STANDARD SETTING 100wt

**7**

Position assembly as shown and carefully screw into the shock body. (some oil will spill from the body, clean with tissue)




Shock body (containing oil)

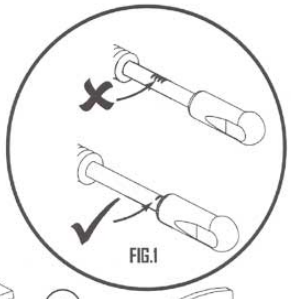

FIG.1

**8**

Note: When housing is assembled correctly there is no black "O" ring showing.

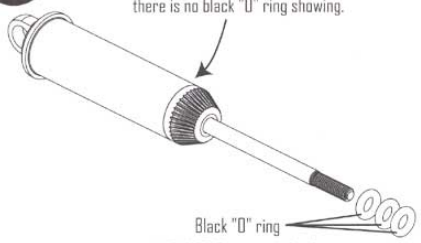

Black "O" ring

**N.B. USE 2 on rear shocks & 3 on the front shocks.**

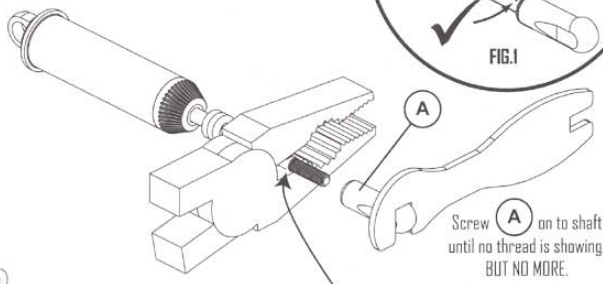


Screw (A) on to shaft until no thread is showing. BUT NO MORE.

**Grip the piston rod very close to the thread. BE CAREFUL NOT TO DAMAGE THE POLISHED SHOCK ROD (See FIG.1).**

**9**

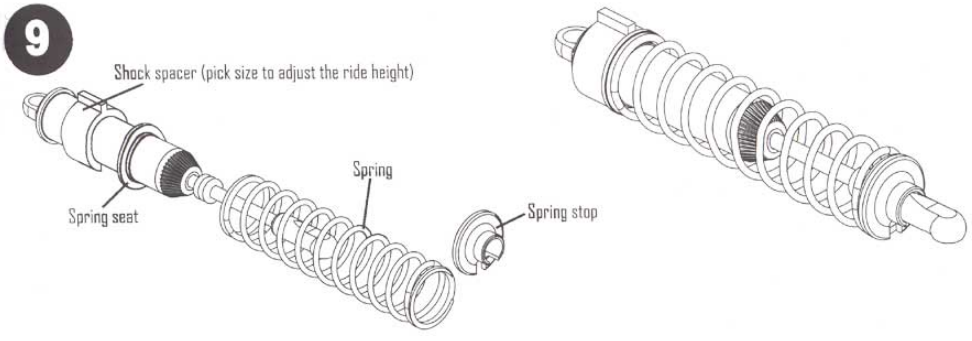

# FRONT & REAR DIFFERENTIAL SERVICE

- A — 5 x 9 x 3 Ball Race x 1
- B — Thrust Race Assembly x 1
- C — Thrust Washer (Smaller Hole) x 1
- D — Thrust Washer (Bigger Hole) x 1
- E — Diff Disc Spring x 6

**1**

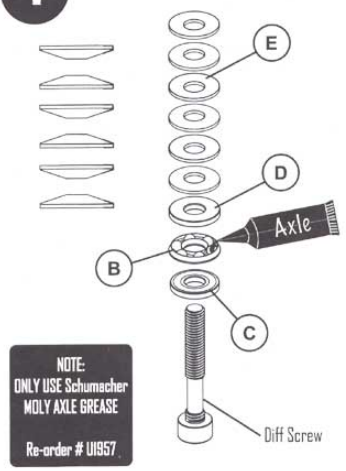


NOTE:
ONLY USE Schumacher
MOLY AXLE GREASE

Re-order # UI957

**2**

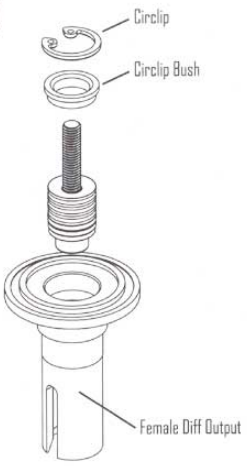


**3**

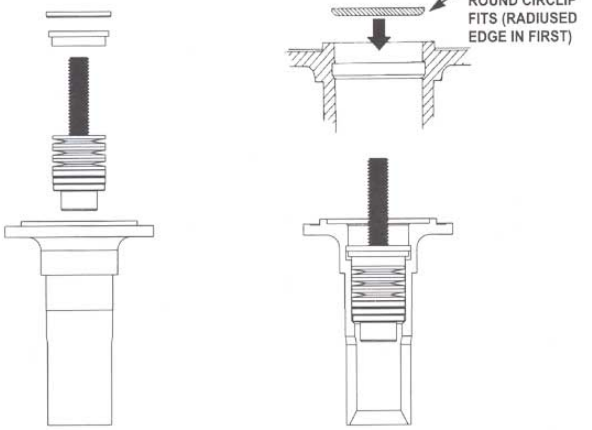


**4**

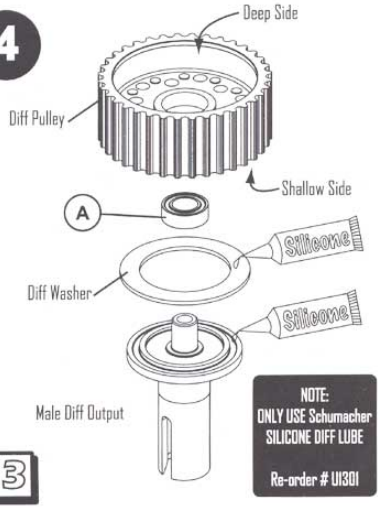


NOTE:
ONLY USE Schumacher
SILICONE DIFF LUBE

Re-order # UI301

**5**

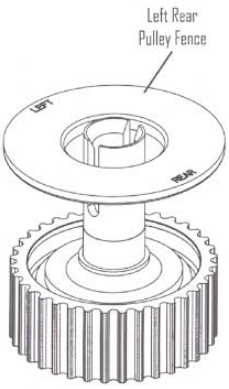

Schumacher

MENACE 2.1

# FRONT & REAR DIFFERENTIAL SERVICE

- (A) 2.5mm Dia Diff Ball x 12
- (B) Thin Sim x 1
- (C) 5 x 9 x 3 Ball Race x 1
- (D) M3 x 6 Grub Screw x 1

**7**

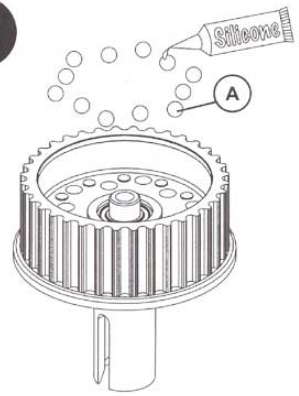


**8**

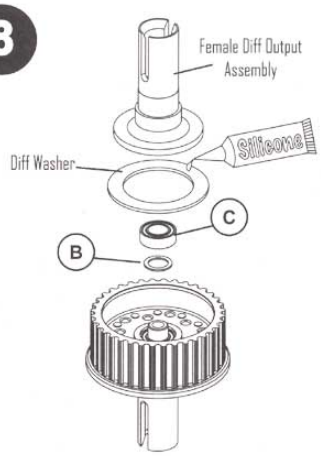


**9**

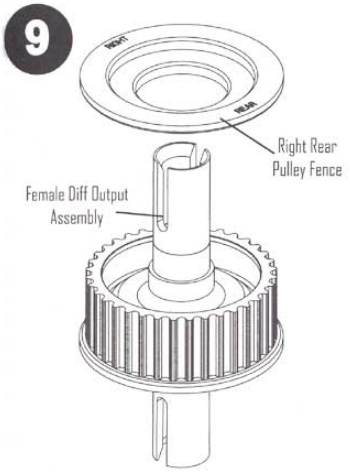


**10**

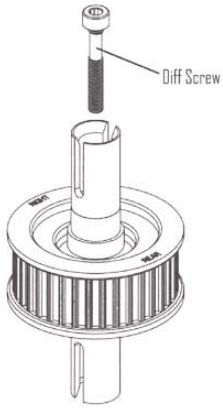


**11**

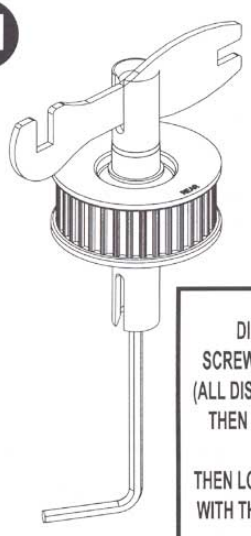

DIFF SETTING
SCREW IN UNTIL TIGHT
(ALL DISC SPRINGS FLAT)
THEN UNDO ¼ TURN.

THEN LOCK THE SETTING
WITH THE GRUB SCREW.

**12**

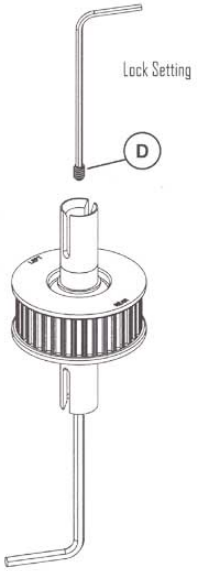


**13**

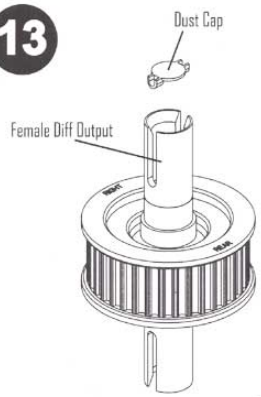

**1**

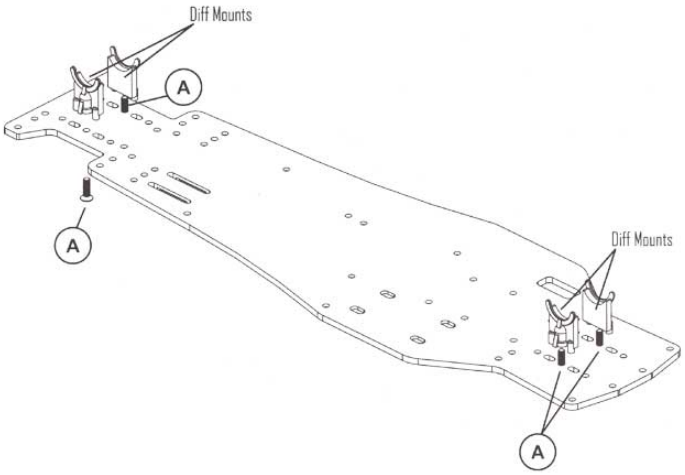


Schumacher

MENACE 2.1

## TRANSMISSION

A — M3 x 10mm Csk TORX Head x 4

B — M3 x 12mm Csk TORX Head x 8

**2**

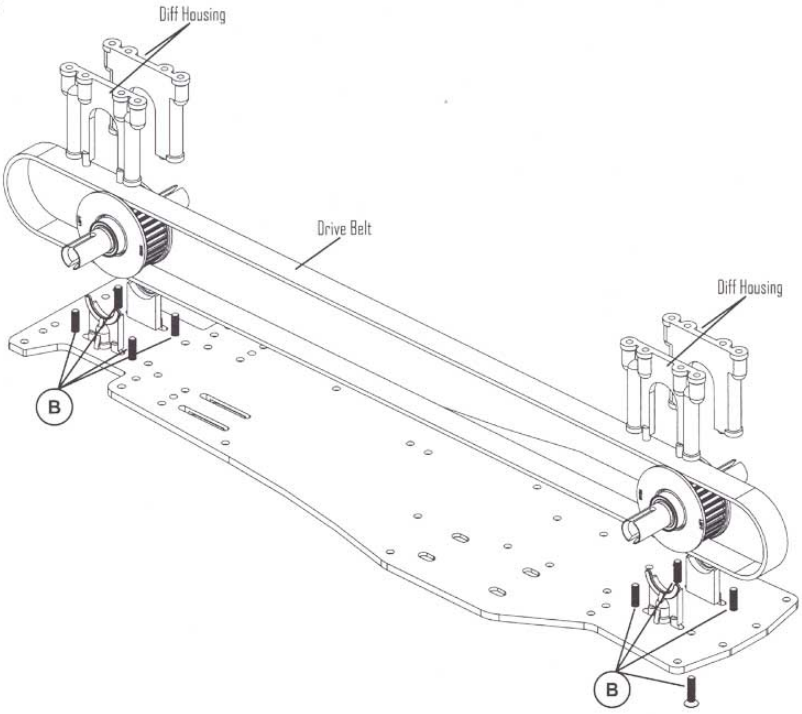

**3**

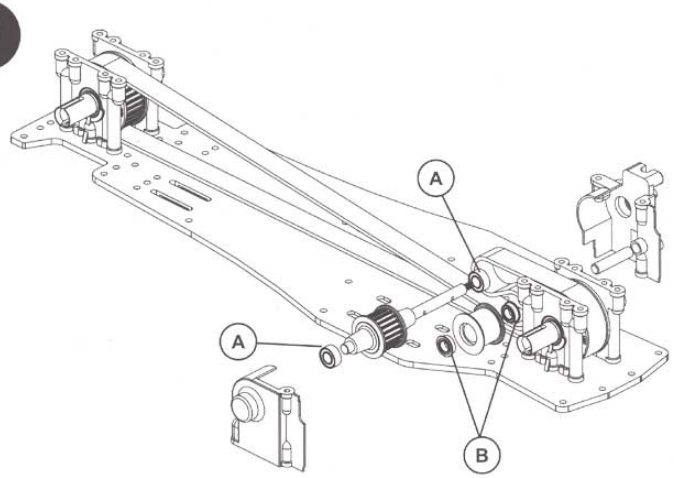


Schumacher

MENACE 2.1

## TRANSMISSION Cont.

A — 5 x 10 Ball Bearing x 2

B — 5 x 9 Flanged Ball Bearing x 4

C — M3 x 12mm Csk TORX Head x 4

**4**

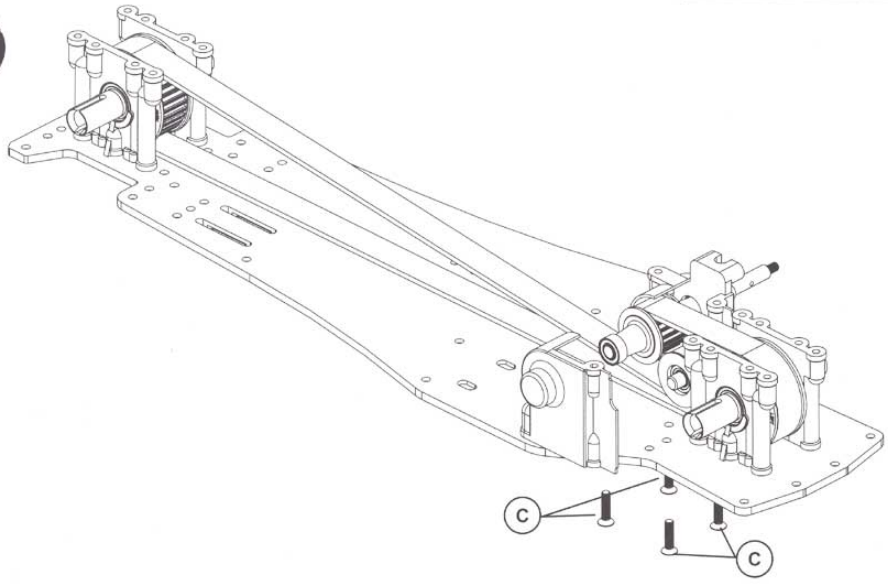


**5**

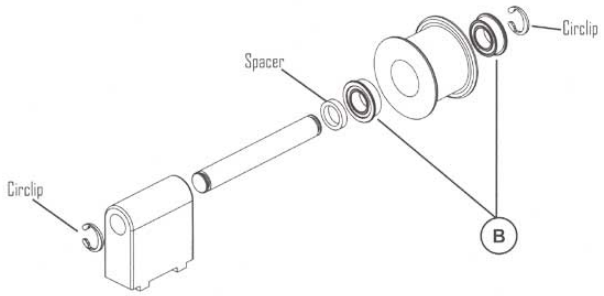

## 6

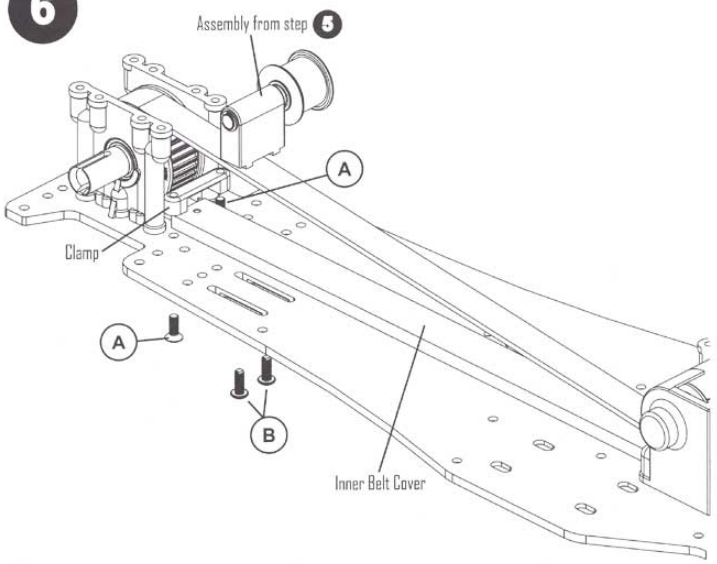


Schumacher

MENACE 2.1

### TRANSMISSION Cont.

A
M3 x 8mm Csk TORX Head x 2

B
M3 x 10mm Button Head x 2

C
M3 x 6mm Csk TORX Head x 4

## 7

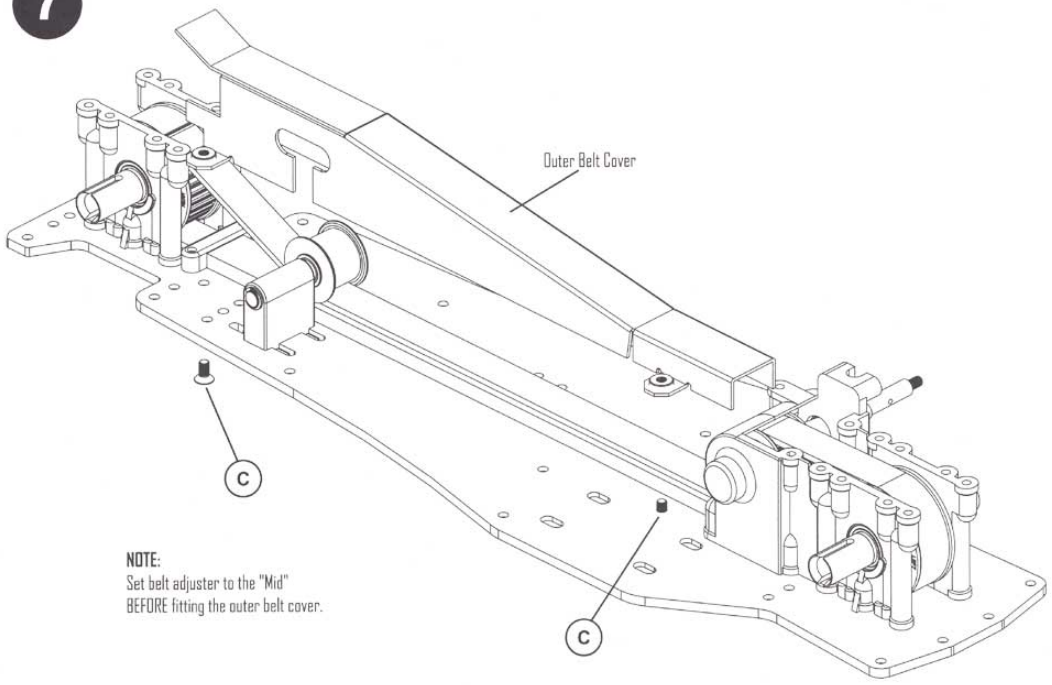


**NOTE:**
Set belt adjuster to the "Mid"
BEFORE fitting the outer belt cover.

**8**

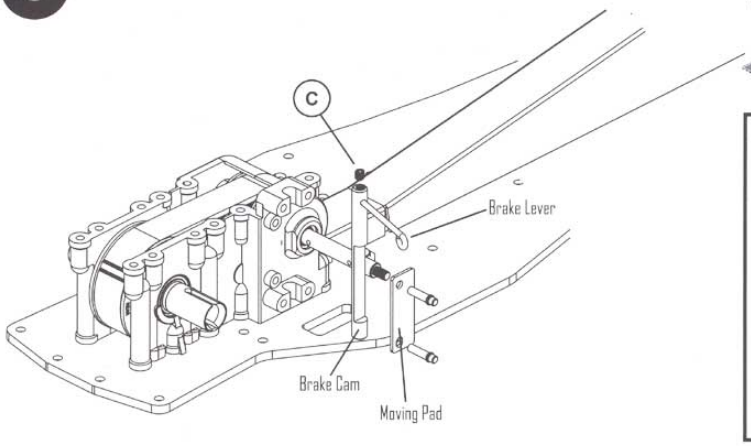


Schumacher

MENACE 2.1

## TRANSMISSION Cont:

A — 1.5mm x 10mm Pin x 1

B — M3 x 10mm Pan TORX Head x 4

C — M3 x 3 Grub Screw

**9**

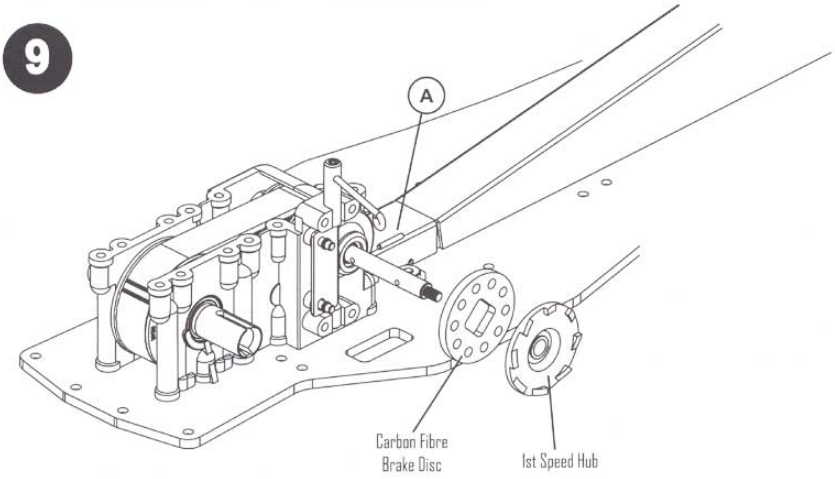


**10**

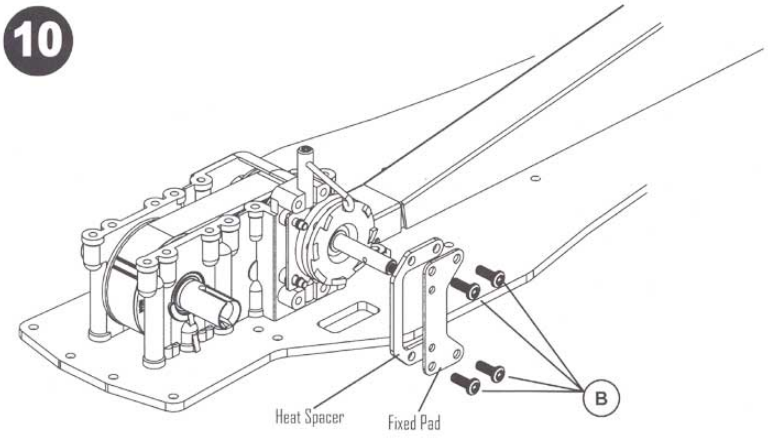

Schumacher

MENACE 2!

## 11

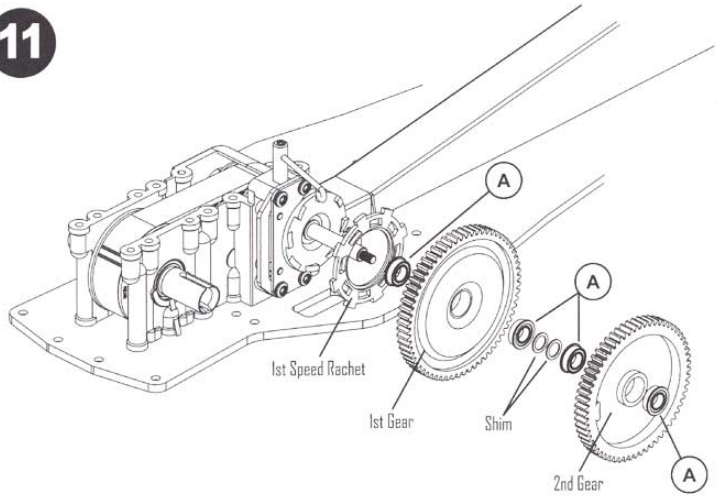


## TRANSMISSION Cont.

- A — 5 x 9 Flanged Ball Bearing x 6
- B — M3 Steel Washer x 1
- C — M3 Nyloc Nut x 1
- D — 1.5mm x 10mm Pin x 1

## 12

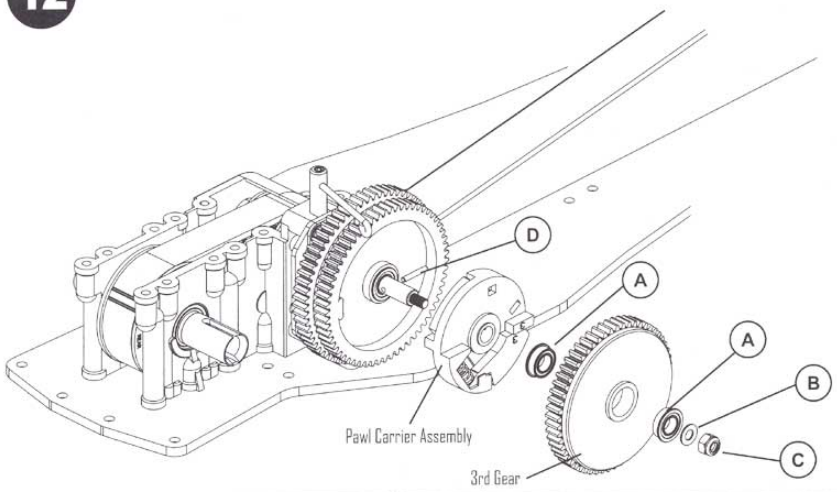


## 13

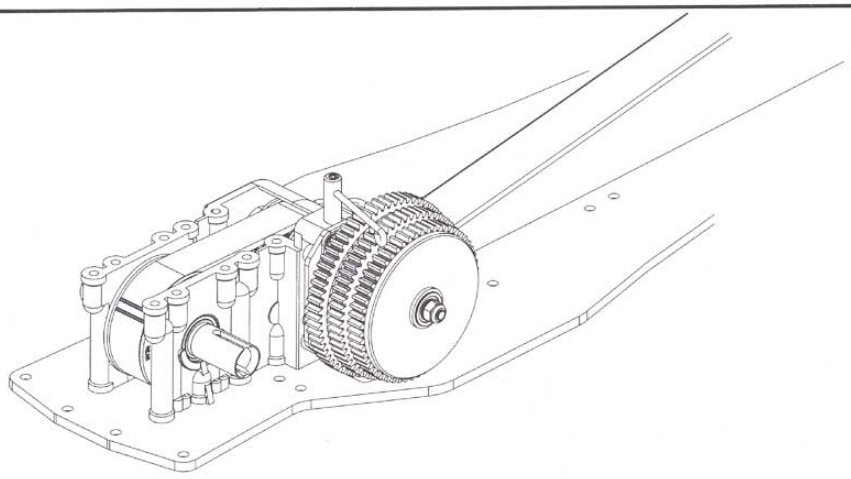

Schumacher

MENACE 21

1

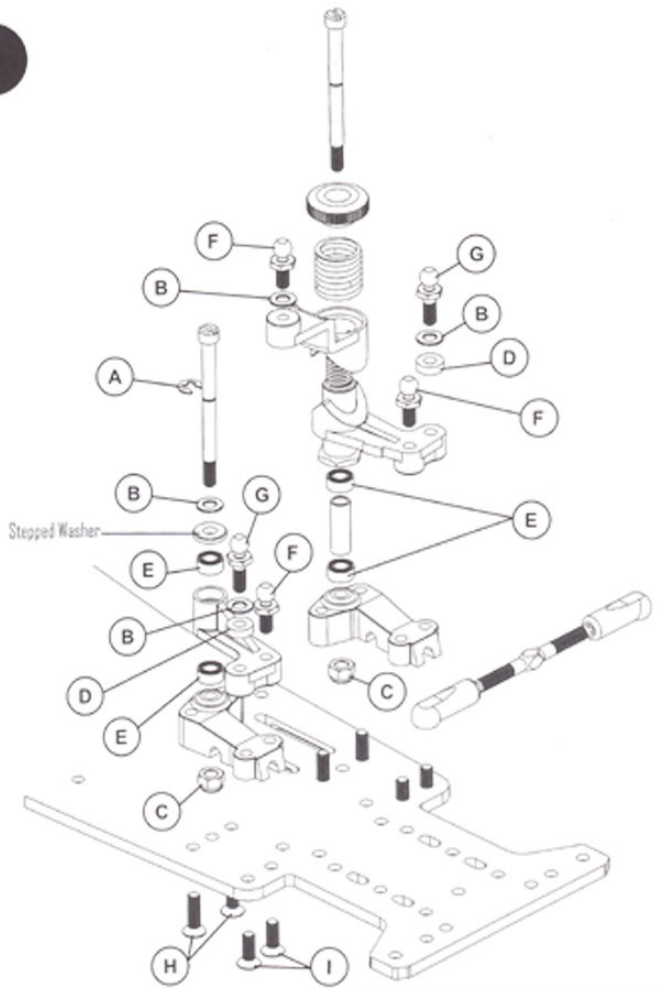


## STEERING

| | |
|---|---|
| A | "E" Clip x 1 |
| B | M3 Steel Washer x 4 |
| C | M3 Nyloc Nut x 2 |
| D | 2mm Spacer x 2 |
| E | 1/8" x 1/4" Ball Race x 4 |
| F | Ball Stud Short M3 x 3 |
| G | Ball Stud Long M3 x 2 |
| H | M3 x 10mm Csk TORX Head x 4 |
| I | M3 x 8mm Csk TORX Head x 4 |

2

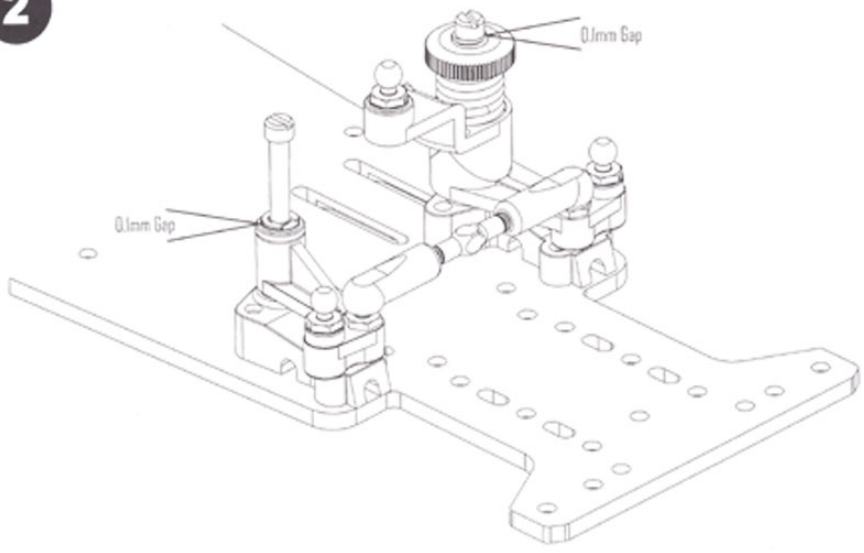

Schumacher

MENACE 21

## 1

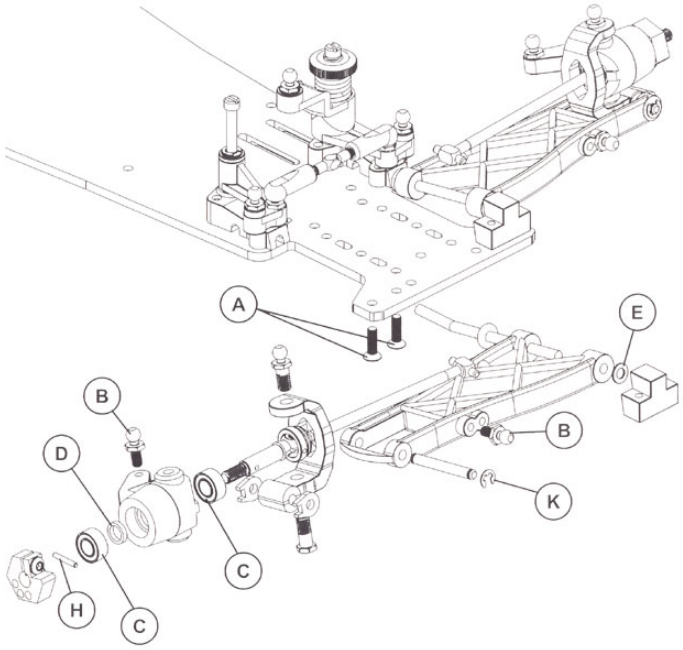


## 2

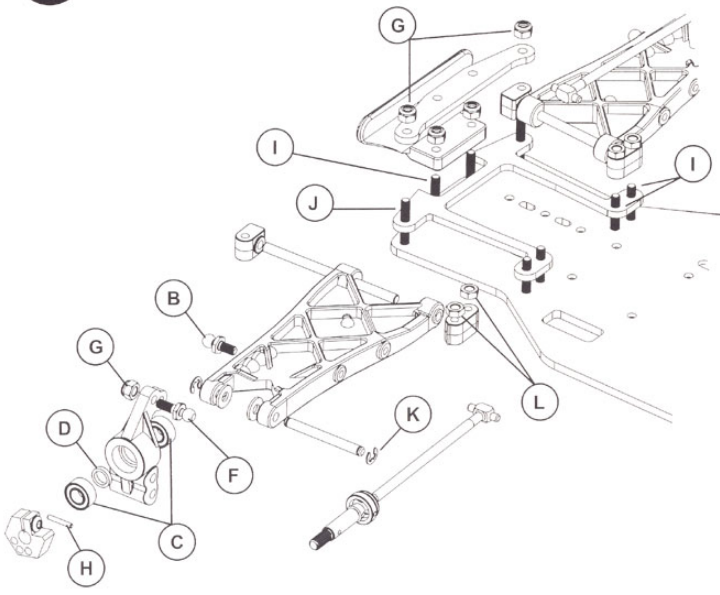


## SUSPENSION

- A — M3 x 10mm Csk TORX Head x 4
- B — Ball Stud Short M3 x 6
- C — 5 x 10 Ball Race x 8
- D — THICK shim x 4
- E — M3 Steel Washer x 2
- F — Ball Stud Long M3 x 2
- G — M3 Nyloc Nut x 6
- H — 1.5mm x 10mm Pin x 4
- I — M3 x 16mm Csk TORX Head x 6
- J — M3 x 20mm Csk TORX Head x 2
- K — "E" Clip x 8
- L — M3 Nut x 4

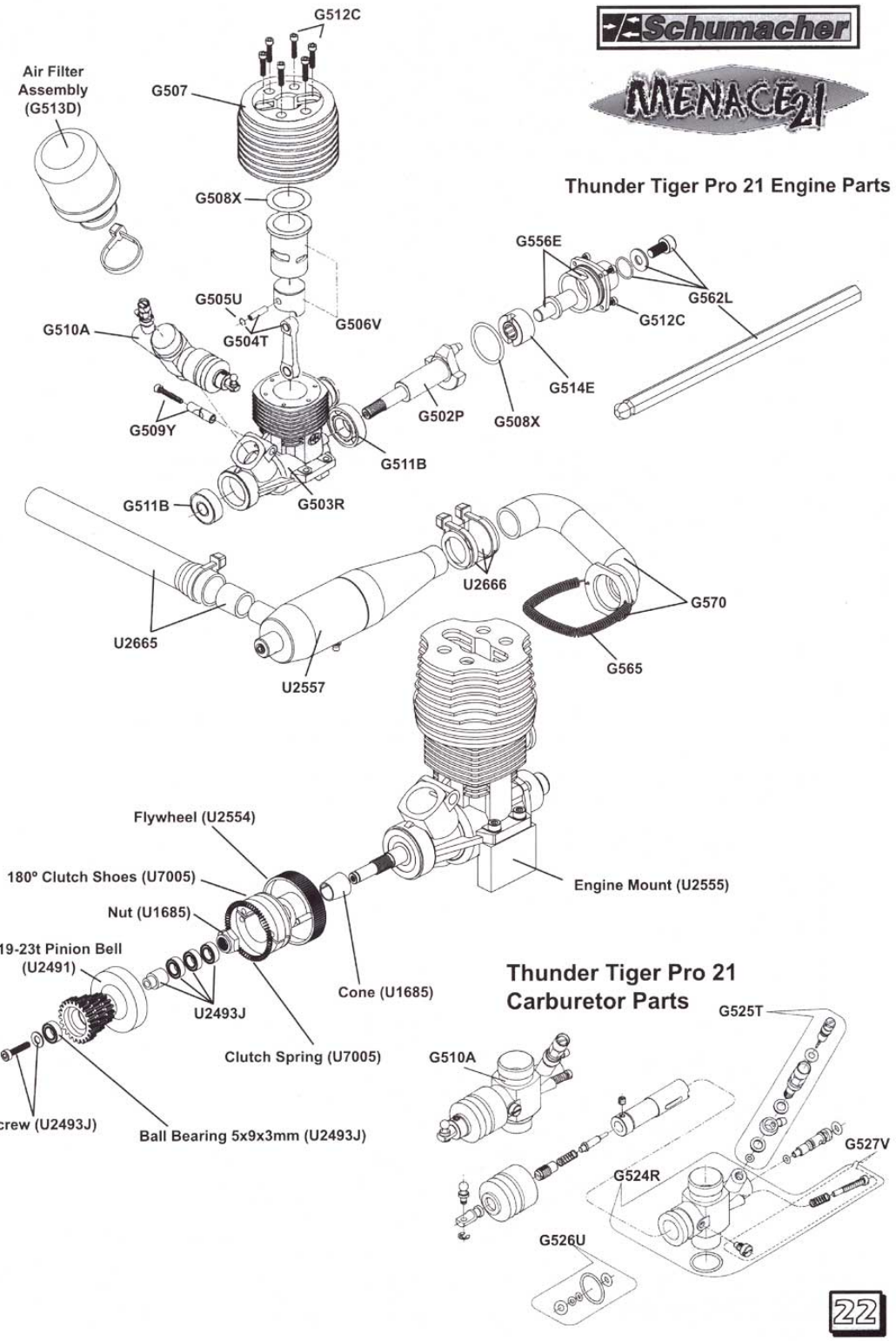
Schumacher
MENACE 21
Thunder Tiger Pro 21 Engine Parts
G512C
Air Filter Assembly (G513D)
G507
G508X
G505U
G504T
G506V
G510A
G509Y
G502P
G511B
G503R
G511B
G556E
G562L
G512C
G514E
G508X
U2666
G570
G565
U2665
U2557
Flywheel (U2554)
180° Clutch Shoes (U7005)
Nut (U1685)
15-19-23t Pinion Bell (U2491)
U2493J
Cone (U1685)
Clutch Spring (U7005)
Screw (U2493J)
Ball Bearing 5x9x3mm (U2493J)
Engine Mount (U2555)
Thunder Tiger Pro 21 Carburetor Parts
G525T
G510A
G527V
G524R
G526U

# TRACK SETTINGS

Schumacher

MENACE 21



## FRONT TOE-IN

The front toe-in is set by adjusting the steering trackrod turnbuckles. Toe-In = A less than B
Toe-Out = A greater than B
Toe-in will give a more stable car, but will give less sharp turn in. We recommend to start at about 0° each side.
Toe-out will give the opposite, less stability with sharper turn in to the corners.

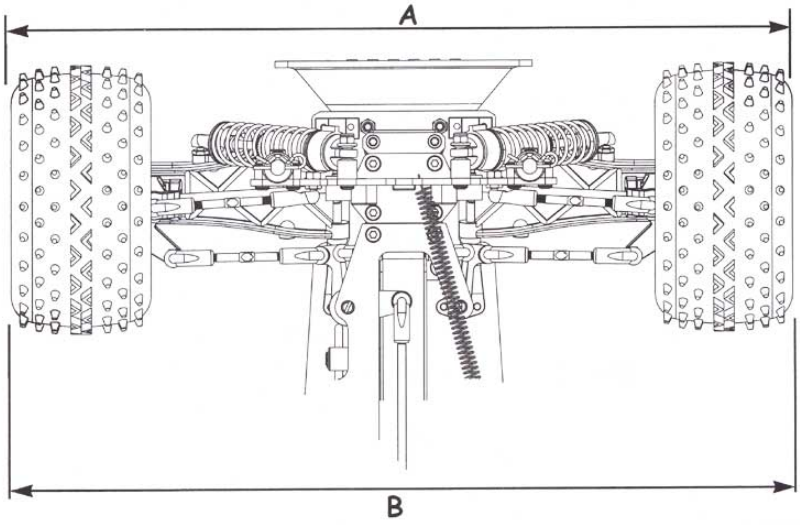


## FRONT & REAR CAMBER

Car as standard will have 1.5° negative camber (the top of the wheels lean inward). Set the camber to 1.5° negative by adjusting the top turnbuckle.

Reducing the camber gives a more progressive slide, but may give less grip.

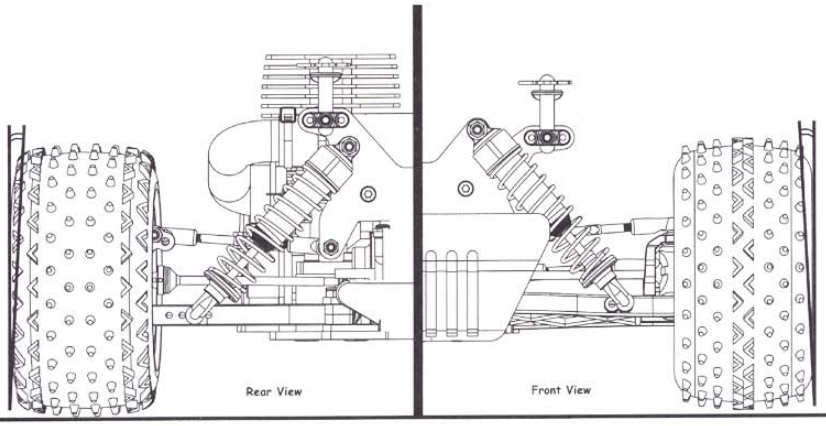

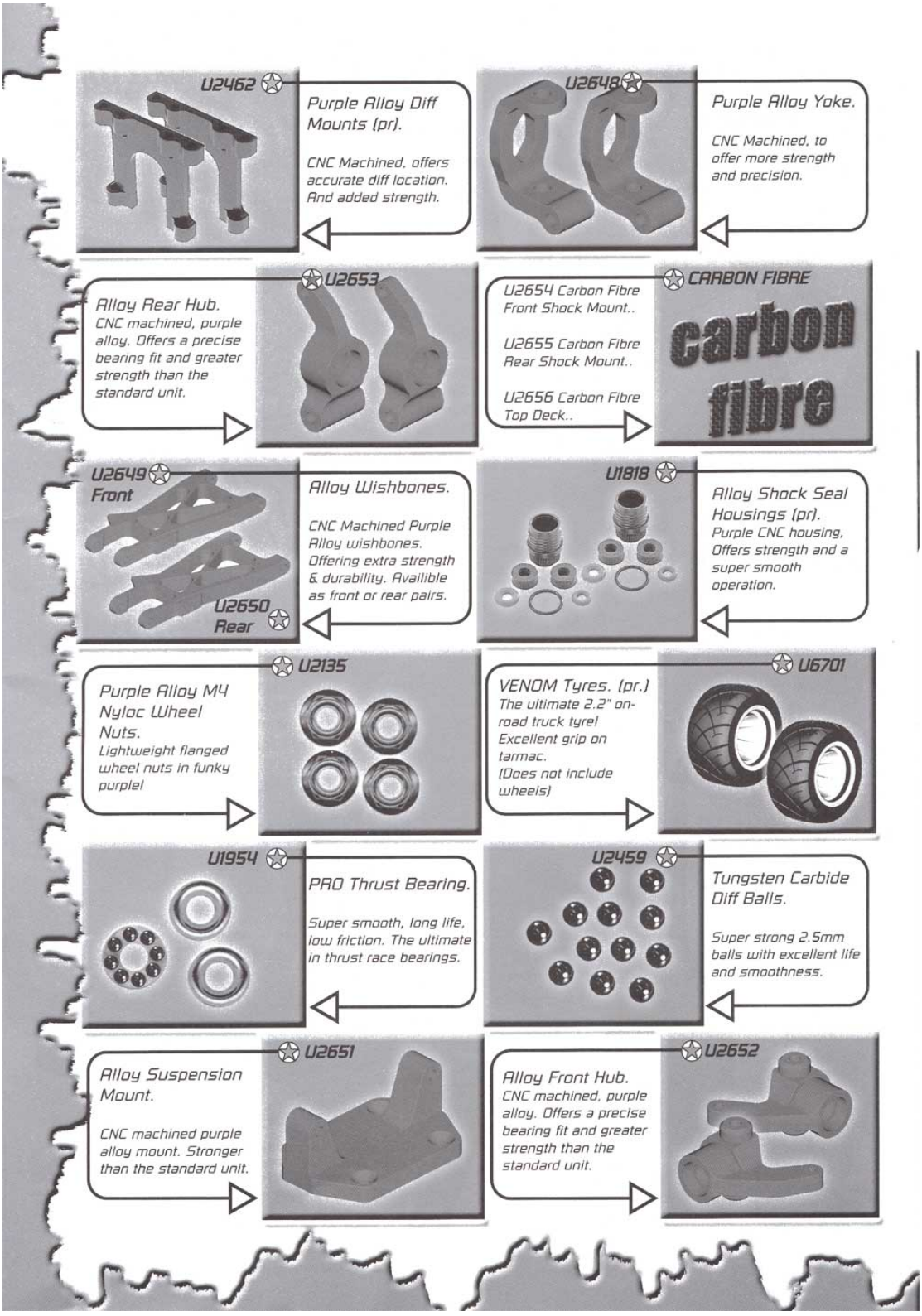
U2462
Purple Alloy Diff Mounts (pr).
CNC Machined, offers accurate diff location. And added strength.
U2648
Purple Alloy Yoke.
CNC Machined, to offer more strength and precision.
U2653
Alloy Rear Hub.
CNC machined, purple alloy. Offers a precise bearing fit and greater strength than the standard unit.
U2654 Carbon Fibre Front Shock Mount..
U2655 Carbon Fibre Rear Shock Mount..
U2656 Carbon Fibre Top Deck..
CARBON FIBRE
carbon fibre
U2649 Front
U2650 Rear
Alloy Wishbones.
CNC Machined Purple Alloy wishbones. Offering extra strength & durability. Availible as front or rear pairs.
U1818
Alloy Shock Seal Housings (pr).
Purple CNC housing, Offers strength and a super smooth operation.
U2135
Purple Alloy M4 Nyloc Wheel Nuts.
Lightweight flanged wheel nuts in funky purple!
U6701
VENOM Tyres. (pr.)
The ultimate 2.2" on-road truck tyre! Excellent grip on tarmac.
(Does not include wheels)
U1954
PRO Thrust Bearing.
Super smooth, long life, low friction. The ultimate in thrust race bearings.
U2459
Tungsten Carbide Diff Balls.
Super strong 2.5mm balls with excellent life and smoothness.
U2651
Alloy Suspension Mount.
CNC machined purple alloy mount. Stronger than the standard unit.
U2652
Alloy Front Hub.
CNC machined, purple alloy. Offers a precise bearing fit and greater strength than the standard unit.

Schumacher

www.racing-cars.com

Wiha



HW001 Wiha Precision Hex Driver - 1.3mm
HW002 Wiha Precision Hex Driver - 1.5mm
HW003 Wiha Precision Hex Driver - 2.0mm
HW004 Wiha Precision Hex Driver - 2.5mm
HW005 Wiha Precision Pozi Screw Driver
HW006 Wiha Precision Nut Driver - M3
HW007 Wiha Precision Nut Driver - M4
HW008 Wiha Precision TORX Driver T10



H1018 4 WayGlow Plug Spanner



G010U Pure Silicone Shock Oil - 10w
G015A Pure Silicone Shock Oil - 15w
G020F Pure Silicone Shock Oil - 20w
G025L Pure Silicone Shock Oil - 25w
G030T Pure Silicone Shock Oil - 30w
G035Y Pure Silicone Shock Oil - 35w
G040E Pure Silicone Shock Oil - 40w
G045K Pure Silicone Shock Oil - 45w
G050R Pure Silicone Shock Oil - 50w
G055X Pure Silicone Shock Oil - 55w
G060D Pure Silicone Shock Oil - 60w
G070P Pure Silicone Shock Oil - 70w
G080C Pure Silicone Shock Oil - 80w
G100B Pure Silicone Shock Oil - 100w
G120A Pure Silicone Shock Oil - 120w



H1010V Body Clips - Flourescent Yellow (pk10)
H1011W Body Clips - Flourescent Green (pk10)
H1012X Body Clips - Flourescent Red (pk10)
H1013Y Body Clips - Metallic Red (pk10)
H1014A Body Clips - Metallic Blue (pk10)
H1015B Body Clips - Metallic Purple (pk10)



H1016 250cc Fuel Bottle
H1017 500cc Fuel Bottle



U1118 Glow Plug



G200V ZX1 - Microlube



G727 6.0volt 1000mah hump battery pack.

G726 6.0volt 1000mah flat battery pack.


**Schumacher Racing Products Ltd.**
**71-73 Tenter Road ~ Moulton Park**
**Northampton ~ NN3 6AX ~ UK**
**Tel: +44(0) 1604 790770 ~ Fax: + 44(0) 1604 790209**

**Schumacher U.S.A. Inc.**
**6302 Benjamin Road ~ Suite 404**
**Tampa ~ Florida ~ 33634 ~ USA**
**Tel: (813) 889 9691 ~ Fax: (813) 889 9593**