MENACE GTR

1/8th Scale Street Racer

Assembly
&
Maintenance
Manual

Schumacher

www.racing-cars.com

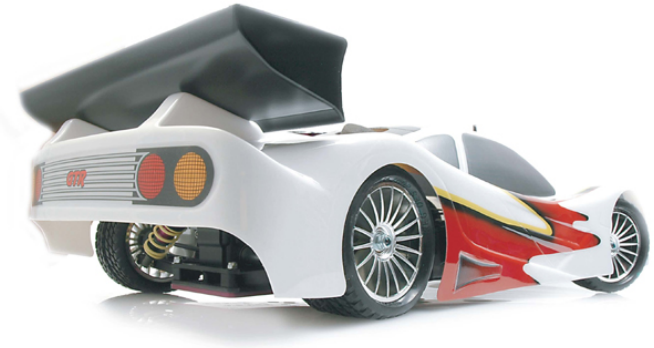

S1094



Schumacher

MENACE GTR

IMPORTANT SAFETY NOTES

1. This product is not suitable for children under 14 years of age unless supervised by an adult.
2. Select an area for assembly that is away from reach of small children. The parts are small and can be swallowed by children causing choking and possible internal injuries.
3. Shock fluids, grease and adhesives should be kept out of children's reach. They are not toxic, but were not intended for human consumption.
4. Exercise care when using any hand tools, sharp instruments and power tools during construction.
5. Carefully read all manufacturers warnings and cautions for any glues or paints that may be used for assembly purposes.

Do not use excessive force when tightening the self-tapping screws, or you may strip the thread in the plastic. It is recommended to stop tightening it when the threaded part on the screw goes into the plastic part and you feel some resistance from the tightening. Screws can be made easier to tighten if a drop of oil is used.



Good

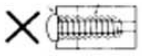

Over tighten and may strip the thread in the plastic

ADDITIONAL ITEMS REQUIRED

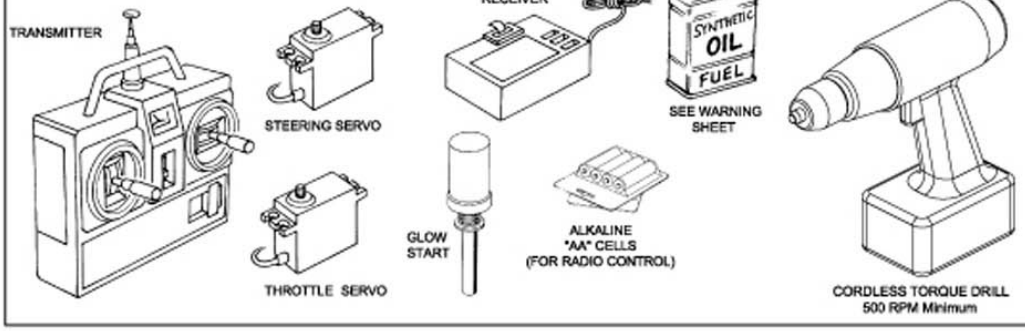

FOR BEST PERFORMANCE, IT IS VERY IMPORTANT THAT GREAT CARE IS TAKEN TO ENSURE THE FREE MOVEMENT OF ALL PARTS.

ADDITIONAL TOOLS REQUIRED

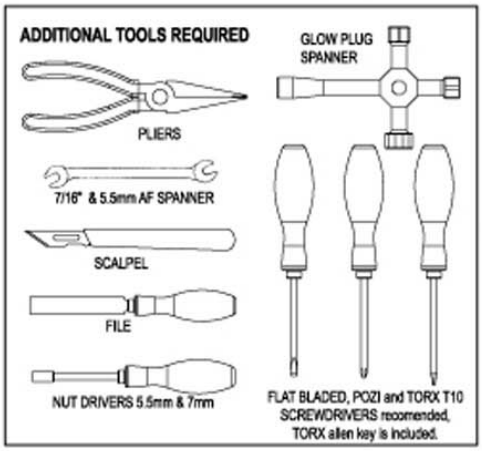

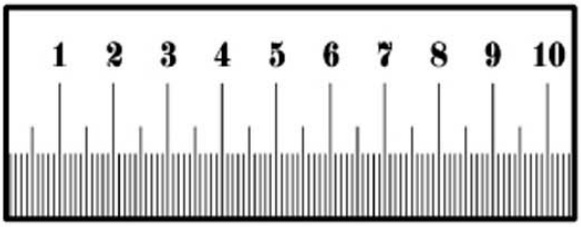

In line with our policy of continous development the exact specification of the kit may vary.
In the unlikely event of any problems with your kit please contact the model shop where you purchased it.

Schumacher

MENACE GTR

RADIO INSTALLATION
Parts required:

A — M3 x 12mm Csk TORX Head x 8

B — M3 x 10mm Csk TORX Head x 1

1 Remove Radio Box

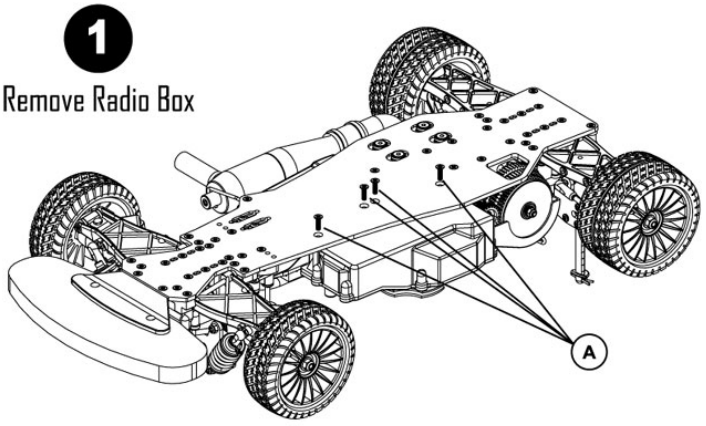

2 Remove Lid

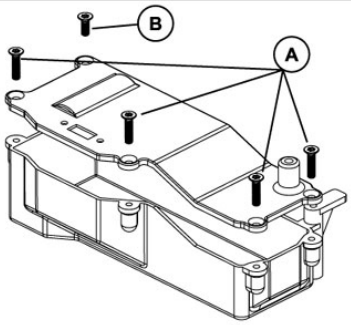

3 Assemble Radio Switch

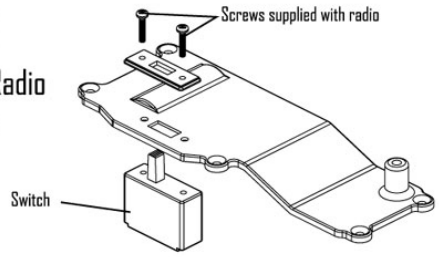

4 Install Receiver Battery & Receiver

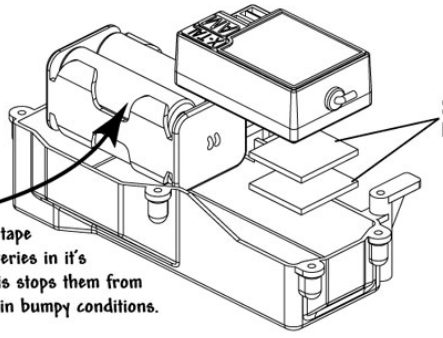

Track Tip
Wrap electrical tape around the batteries in it's battery box. This stops them from vibrating loose in bumpy conditions.

5 Install Servos

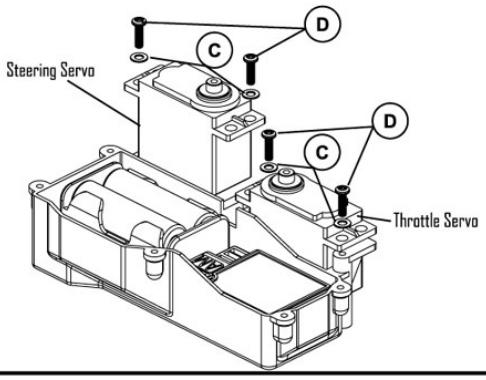

Schumacher

MENACE GTR

RADIO INSTALLATION Continued

A — M3 x 12mm Csk TORX Head x 8

B — M3 x 10mm Csk TORX Head x 1

C — M3 Steel Washer x 4

D — M3 x 10mm Pan TORX Head x 4

6

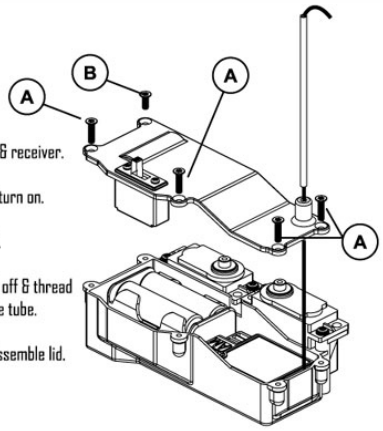

Connect up servos, battery, switch & receiver.

Install batteries into transmitter & turn on.

Set trims on transmitter to neutral.

Test both servos work. Then switch off & thread aerial wire through the lid & into the tube.

Arrange wires into the radio box. Assemble lid.

7

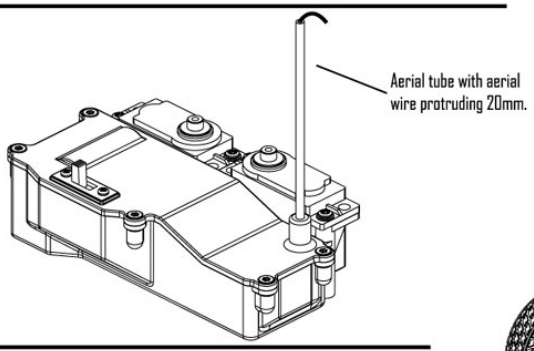

Secure lid to the box.

Re-test to ensure the servos work.

8

Reassemble radio box to car.

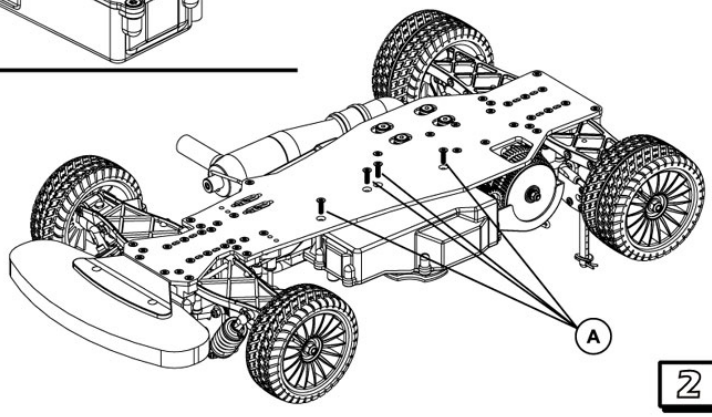

Schumacher

MENACE GTR

STEERING LINK
Parts required:

A — M3 Nyloc Nut x 1

B — Ball Stud Short M3 x 1

1

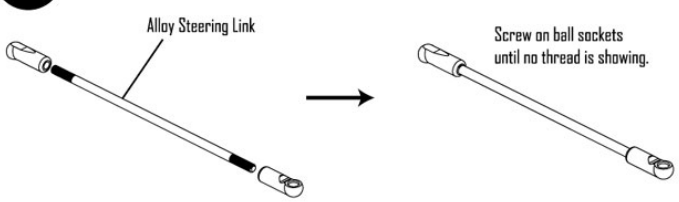

2

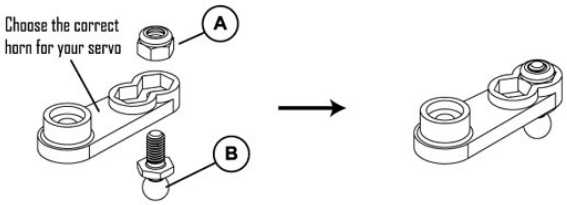

3

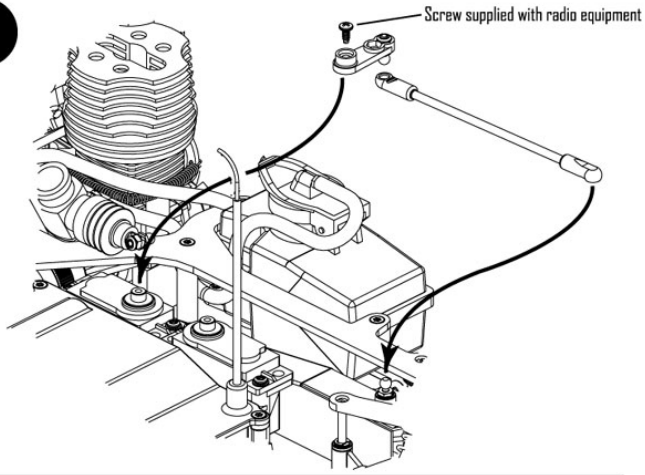

4

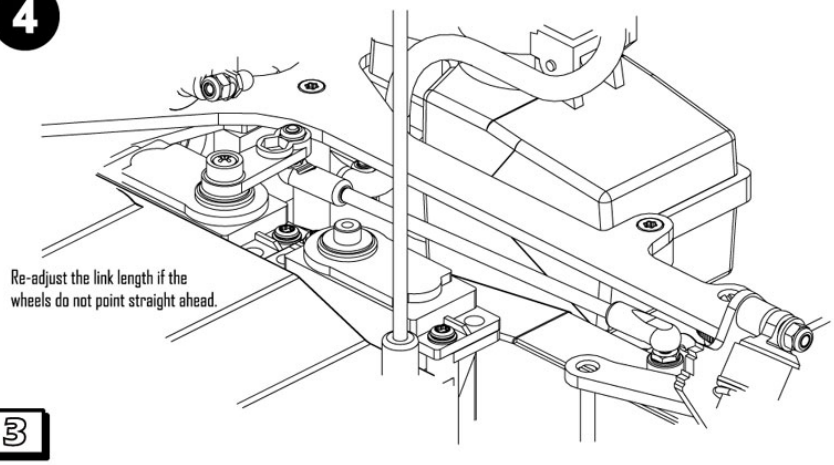

Schumacher

MENACE GTR

THROTTLE & BRAKE LINK

Parts required:

A — Ball Socket x 1

B — No2 3/8 Pan Head x 1

C — Collar & grub screw x 2

1

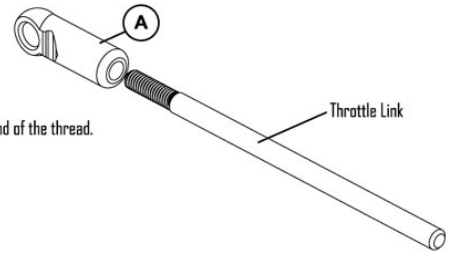

Screw on up to the end of the thread.

2

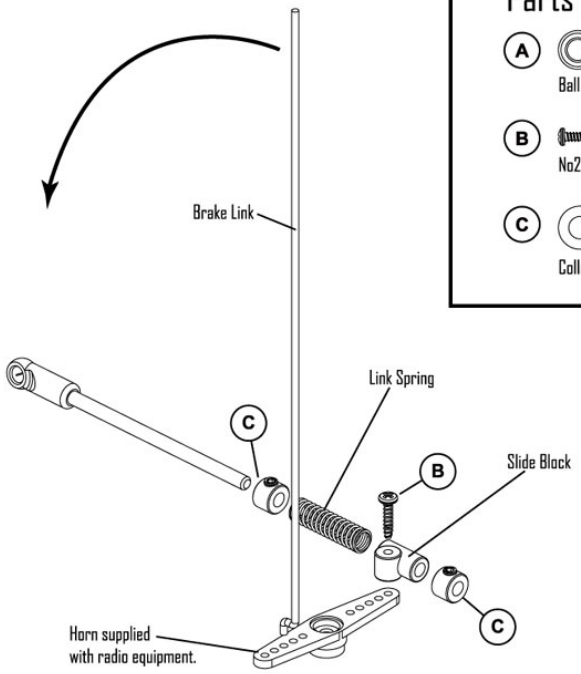

3

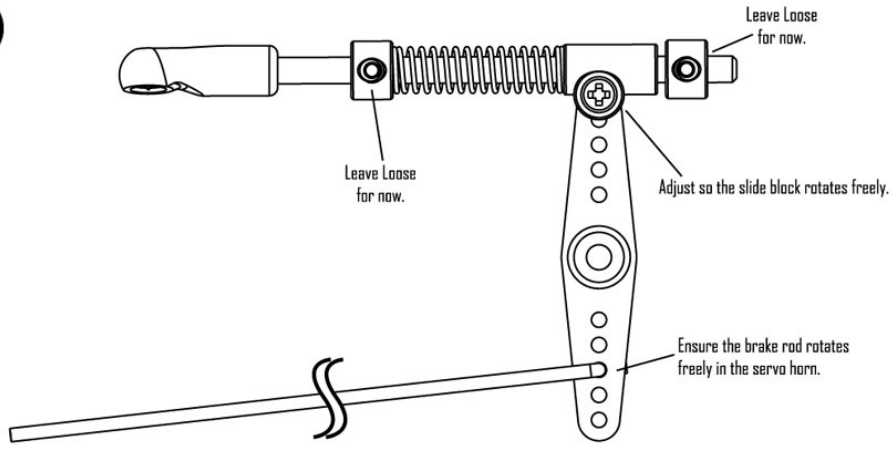

Schumacher

MENACE GTR

4

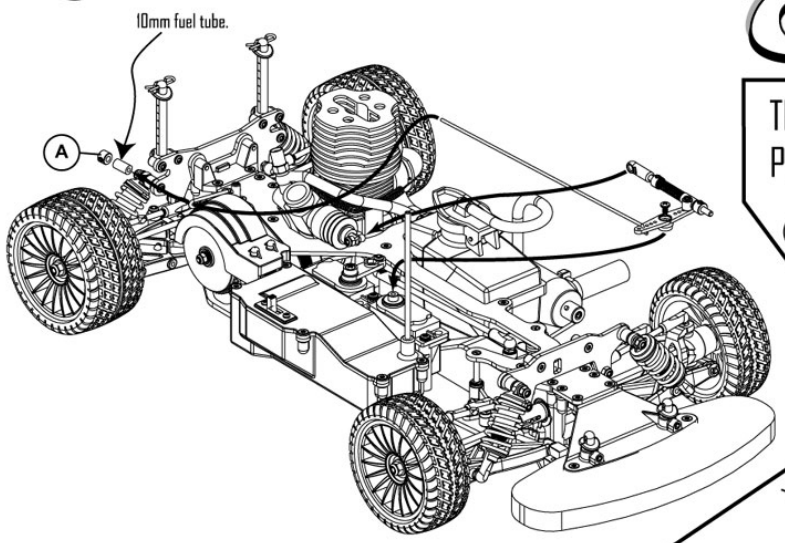

THROTTLE & BRAKE
Parts required:

A Collar & grub screw x 1

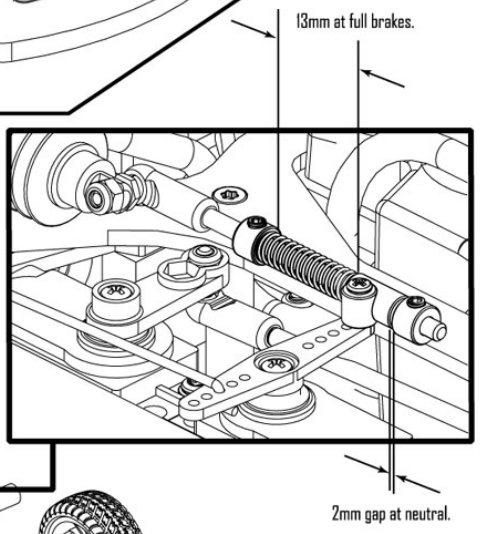

5

Radio Adjustments

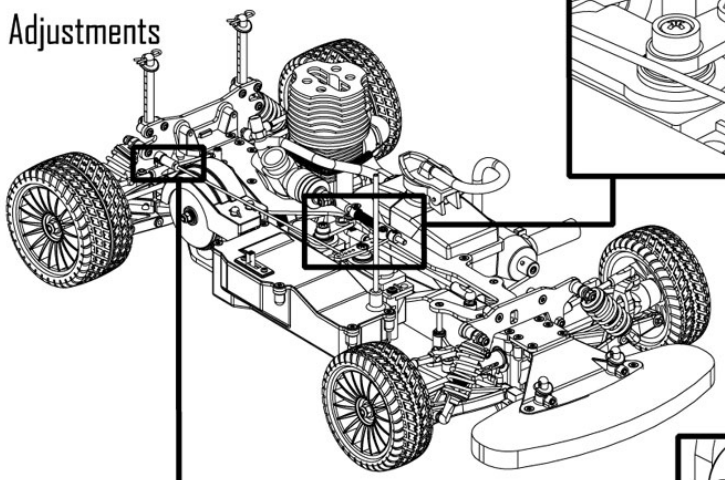

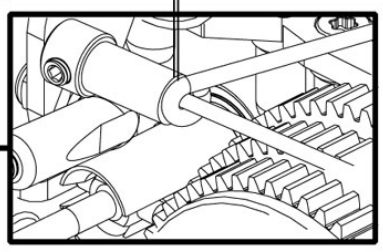

Schumacher

MENACE GTR

SAFETY RETURN SPRING INSTALLATION

1

N.B. Attach the safety return spring to the outer hole on the servo horn.

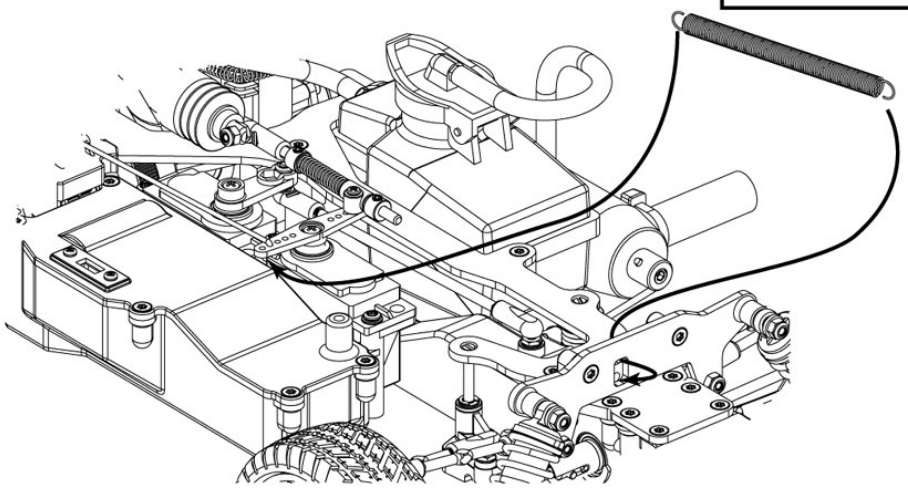

2

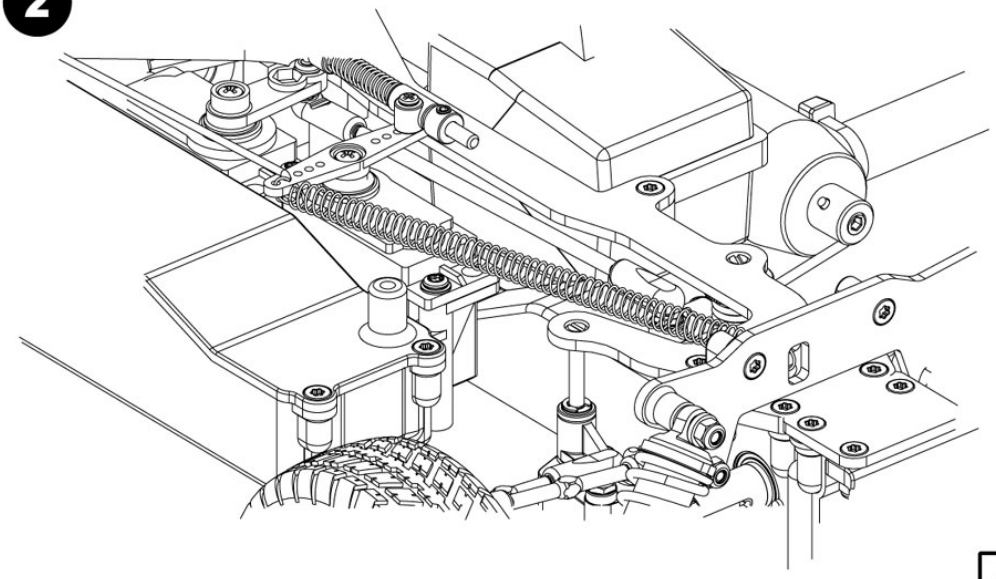

Schumacher

MENACE GTR

FITTING AIR FILTER

1

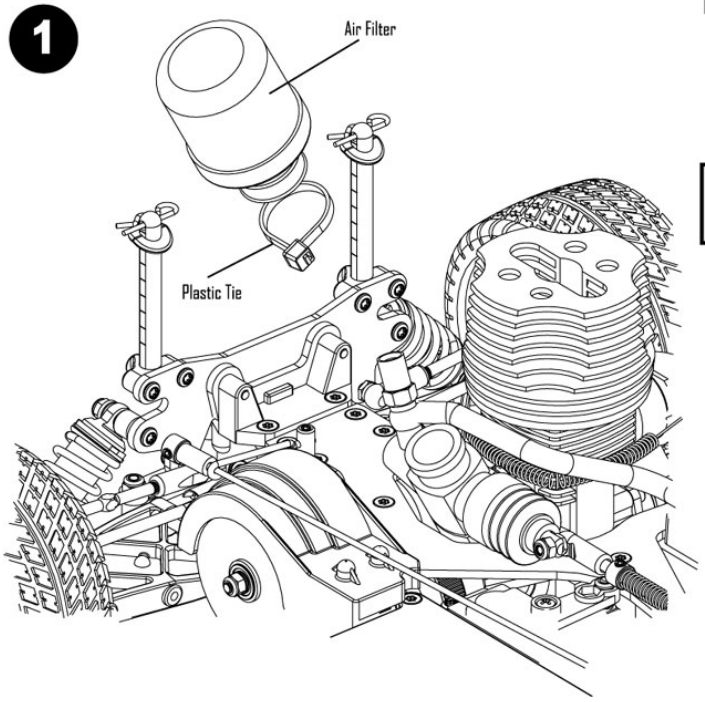

2

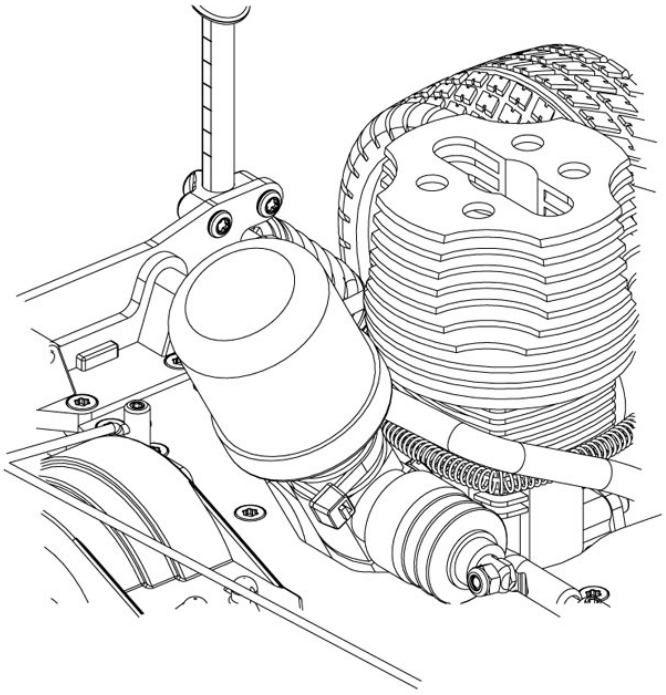

SET UP DRILL

After charging your drill, insert the "e-start" adaptor **(ball end out)** and tighten the chuck.
ENSURE THE DRILL ROTATES CLOCKWISE.

Set the torque setting to the lowest possible setting, that will turn the engine over.



STARTING THE ENGINE

FILL FUEL TANK

2

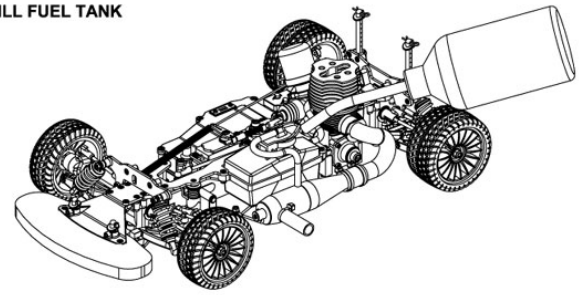

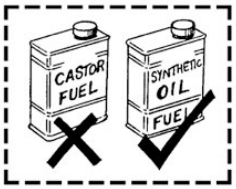

WE STRONGLY RECOMMEND DYNA-GLOW 10, 16 OR 25 or BLUE THUNDER 10, 16 FUEL or TORNADO 20 Fuels.

3 **PRIMING ENGINE**

TURN ON TRANSMITTER.
SWITCH ON RECEIVER.
ENSURE BATTERIES ARE FULLY CHARGED.

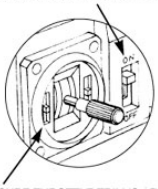

ENSURE THROTTLE TRIM IS AT NEUTRAL, CHECK THROTTLE, BRAKE & STEERING ACTION.

With the drill STATIONARY
INSERT ball end INTO "e" START.
Turn on drill and watch for the fuel to enter the carb. Then keep going for 3 seconds more.
The engine is now primed.



4 **STARTING ENGINE**

HOLD GLOW START ONTO PLUG

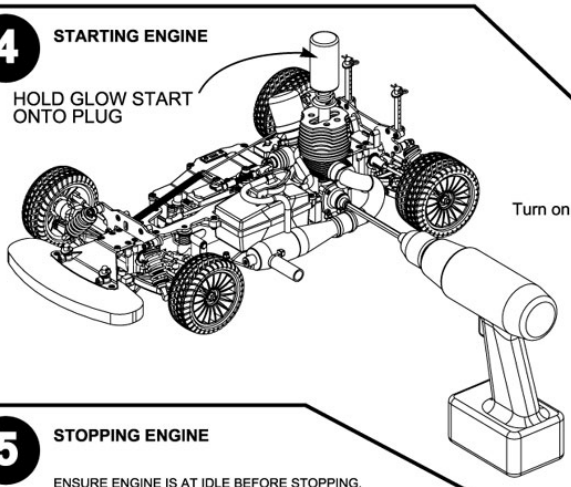

PLEASE NOTE:
1. Only insert the ball end of the driver.
2. NEVER insert the driver if the drill is spinning.

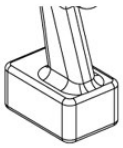

Turn on drill until the engines starts!

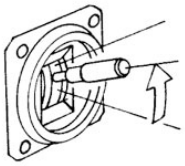

5 **STOPPING ENGINE**

ENSURE ENGINE IS AT IDLE BEFORE STOPPING.
Stop engine by blocking exhaust.

Pull out drill and gently rev the engine, then remove the glow clip.

WARNING

ENGINE AND TUNED PIPE WILL BE VERY HOT DO NOT TOUCH FOR SEVERAL MINUTES

ENGINE SETTINGS

Schumacher

MENACE GTR

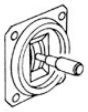

SETTING IDLE SPEED

TRANSMITTER - ZERO/NEUTRAL



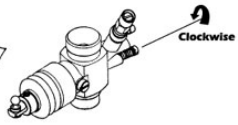

ENGINE STALLS = SCREW IN THROTTLE STOP SCREW TO INCREASE REVS

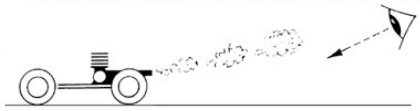

OK

CAR DOES NOT MOVE AND SOME SMOKE = OK

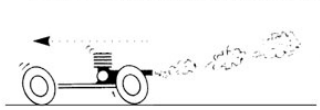

CAR EDGES FORWARD = UNSCREW THROTTLE STOP SCREW TO LOWER REVS

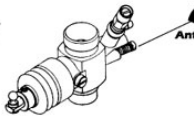

IDLE SPEED SETTING

0.25mm to 0.50mm Slide Open

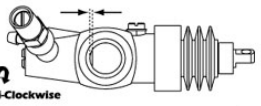

SET IDLE SPEED AS HIGH AS POSSIBLE WITHOUT CAR EDGING FORWARD

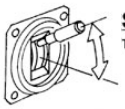

SETTING LOW SPEED MIXTURE

TRANSMITTER - STOP-GO (MAX ACCELERATION)

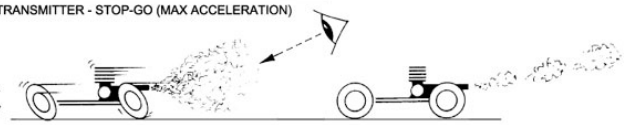

TOO MUCH SMOKE AND SLOW ACCELERATION = SCREW IN LOW SPEED MIXTURE SCREW (TOO RICH)

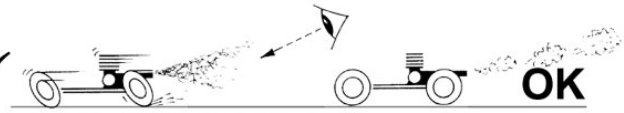

OK

SOME SMOKE AND GOOD ACCELERATION = OK

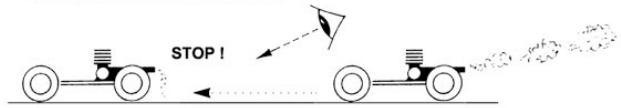

CAR EDGES FORWARD AND THEN STALLS = UNSCREW LOW SPEED MIXTURE SCREW (TOO LEAN)

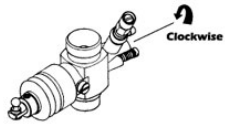

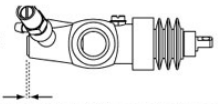

0.40mm in, to 0.40mm out from flush

LOW SPEED MIXTURE SETTING

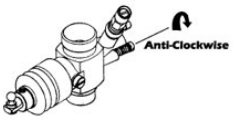

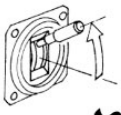

SETTING HIGH SPEED MIXTURE

TRANSMITTER - MAX FULL SPEED

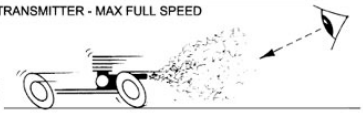

TOO MUCH SMOKE AND SLOW SPEED = SCREW IN HIGH SPEED MIXTURE SCREW (TOO RICH)



OK

SOME SMOKE AND GOOD SPEED = OK



TOO LITTLE SMOKE AND SLOW SPEED = UNSCREW HIGH SPEED MIXTURE SCREW (TOO LEAN)



HIGH SPEED MIXTURE SETTING

1½ Turns Open to 2½ Turns Open from fully closed.

WARNING: IF CAR BEGINS TO LOSE PERFORMANCE AFTER A FEW MINUTES IT IS PROBABLY **OVERHEATING** AND YOU **MUST STOP** AND UNSCREW HIGH SPEED MIXTURE SCREW 90°

N.B. The settings given are for a starting point only.
SMALL adjustments may be required depending on conditions.

DO NOT ALLOW THE NOISE TO ANNOY OTHERS
DO NOT OPERATE THE "CAR" ON THE PUBLIC HIGHWAY
DO NOT OPERATE THE "CAR" IN A CONFINED SPACE OR CROWDED AREA
DO NOT RUN ENGINE WITHOUT AIR FILTER - SERIOUS DAMAGE WILL RESULT
DO NOT ALLOW THE TRANSMITTER OR RECEIVER BATTERIES TO RUN FLAT

Schumacher MENACE GTR

TROUBLE SHOOTING

THE FOLLOWING INFORMATION WILL HELP SOLVE ANY PROBLEMS WHEN RUNNING AND MAINTAINING YOUR CAR

PROBLEM	CAUSE	REMEDY
ENGINE DOES NOT START	FUEL TANK EMPTY, ENGINE NOT PRIMED	FILL TANK AND REPRIME ENGINE
	FLAT GLOW BATTERY OR DEAD GLOW PLUG	RECHARGE BATTERY AND/OR REPLACE PLUG
	CLOGGED AIR FILTER	CLEAN OR REPLACE AIR FILTER
	OVER PRIMED, CYLINDER FLOODED WITH FUEL	REMOVE GLOW PLUG THEN TURN ENGINE OVER TO DISCHARGE FUEL
	INCORRECT CARBURETTOR ADJUSTMENT	CHECK SETTINGS
	INCORRECT LINKAGE ADJUSTMENT	RE ADJUST LINKS WITH SERVO IN NEUTRAL SEE MANUAL
	WORN ENGINE - PISTON LINER	REPLACE PISTON LINER
ENGINE STALLS	FUEL TANK EMPTY	FILL FUEL TANK
	CLOGGED AIR FILTER	CLEAN OR REPLACE AIR FILTER
	INCORRECT CARBURETTOR ADJUSTMENT	RE ADJUST CARBURETTOR SETTINGS
	ENGINE OVER HEATING	ALLOW ENGINE TO COOL DOWN AND OPEN HIGH SPEED MIXTURE SCREW 90°
POOR ENGINE RESPONSE	INCORRECT CARBURETTOR ADJUSTMENTS	RE ADJUST CARBURETTOR SETTINGS
	FUEL TANK PRESSURE PIPE LOOSE, DETACHED OR DAMAGED OR BLOCKED	REPLACE OR REFIT PRESSURE PIPE
	WORN ENGINE - PISTON LINER	REPLACE PISTON LINER
POOR CAR CONTROL	WEAK BATTERIES IN TRANSMITTER	RECHARGE OR REPLACE BATTERIES
	WEAK RECEIVER BATTERIES	RECHARGE OR REPLACE BATTERIES
	TRANSMITTER AERIAL NOT FULLY EXTENDED	EXTEND AERIAL
	POOR ADJUSTMENT OF LINKS	RE-ADJUST LINK TO INSTRUCTIONS

RUNNING ENGINE IN FROM NEW

TO ENSURE YOUR ENGINE HAS A LONG LIFE THE ENGINE NEEDS TO BE "RUN IN" BEFORE BEING "RACED". RUN THE CAR FOR 2 OR 3 TANK FULLS, AT A RICH CARB SETTING ON HALF THROTTLE, DO NOT USE FULL THROTTLE

WARNING:

THE LIMITED SLIP DIFFERENTIAL DESIGN CAN BE DAMAGED BY CONTINUOUSLY SPINNING ONE REAR WHEEL OR BY SPINNING THE CAR ROUND IN " DONUTS" FOR TOO LONG. THE DIFFERENTIAL WILL ALSO BE DAMAGED IF IT IS ALLOWED TO SLIP WHILE DRIVING THE CAR. IF ANY SLIP OCCURS, STOP AND ADJUST IT BEFORE YOU DAMAGE IT

IMPORTANT - REGULAR MAINTENANCE

CHECK DIFFERENTIAL ADJUSTMENT, CHECK ALL SCREWS ARE TIGHT, CHECK GEAR MESH ADJUSTMENT. OIL BEARINGS AND KEEP CAR CLEAN.

Schumacher

MENACE GTR

SHOCK ASSEMBLY
Parts required:

- (A) Outer Piston x 4
- (B) Inner Piston x 4
- (C) Spacer x 4
- (D) Bobbin x 4
- (E) Seal Housing x 4
- (F) "E" clip x 8

1

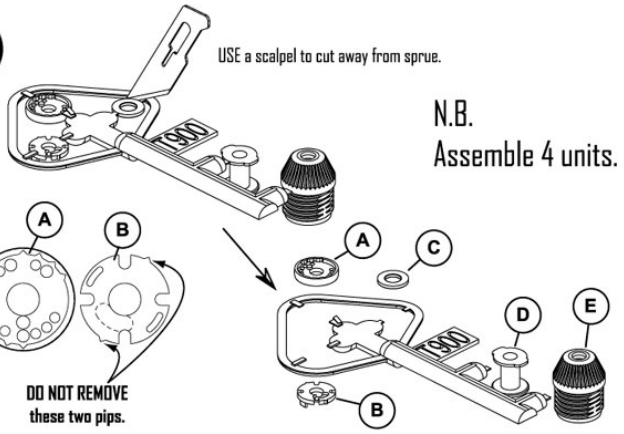

2

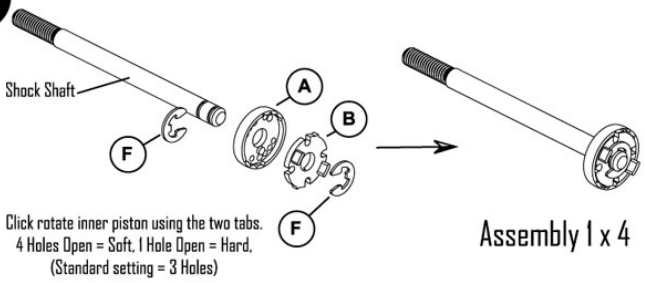

3

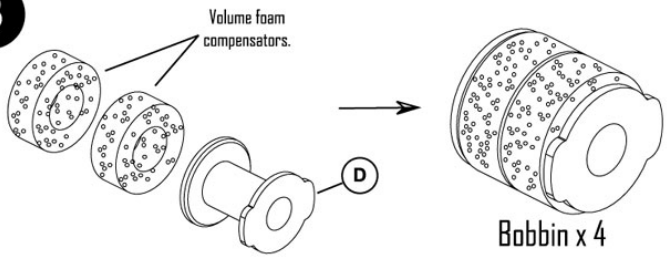

4

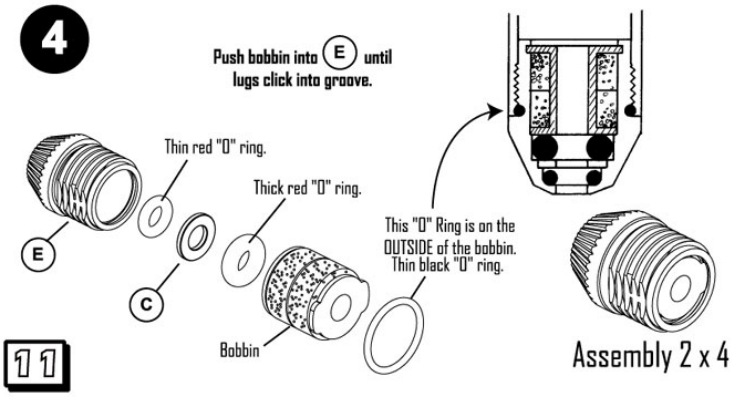

Schumacher

MENACE GTR

SHOCK ASSEMBLY
Parts required:

A



Ball Socket x 4

B



"O" Ring x 8

5

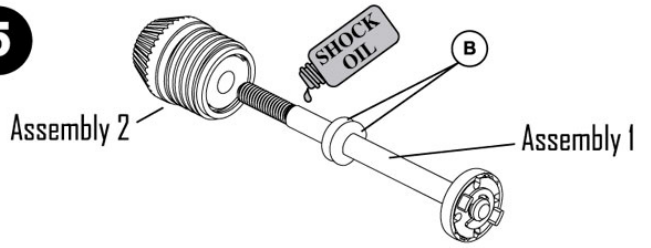

6

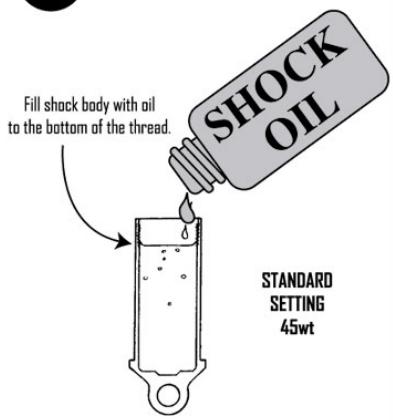

Make 4

7

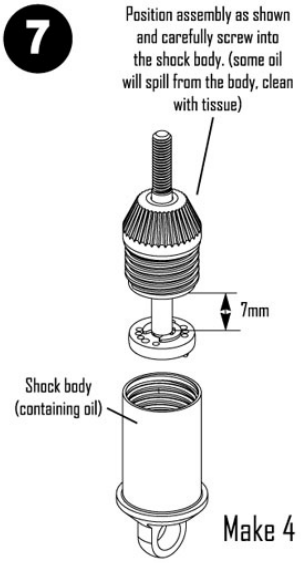

Make 4

8

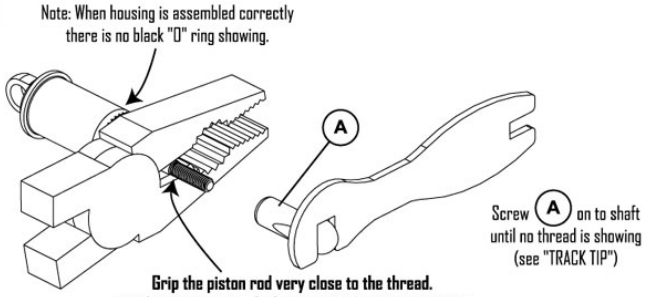

9

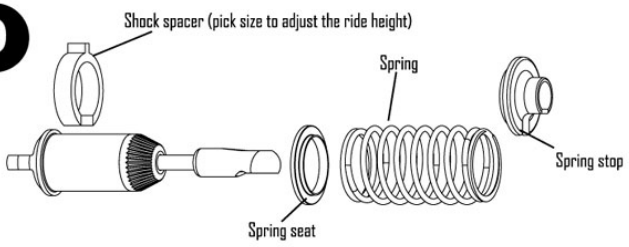

Schumacher

MENACE GTR

FRONT & REAR DIFFERENTIAL SERVICE

- A
- B — 5 x 9 x 3 Ball Race x 1
- C — Thrust Race Assembly x 1
- D — Thrust Washer (Smaller Hole) x 1
- E — Thrust Washer (Bigger Hole) x 1

Diff Disc Spring x 6

1

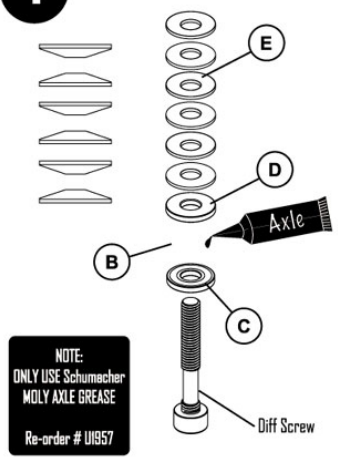

NOTE:
ONLY USE Schumacher
MOLY AXLE GREASE

Re-order # UI957

2

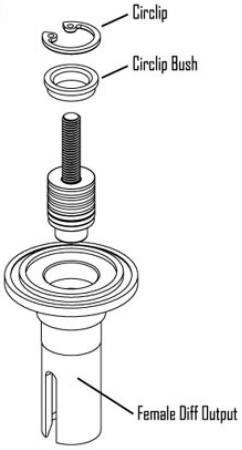

3

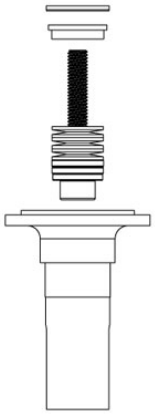

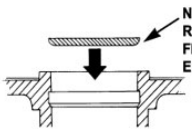



4

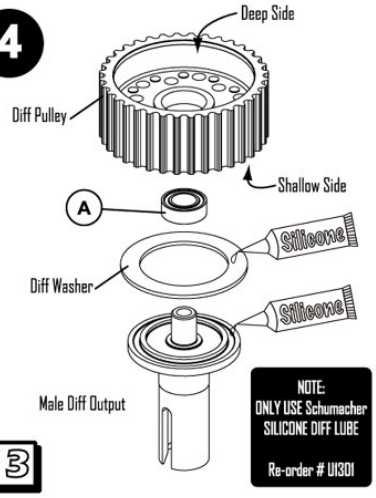

NOTE:
ONLY USE Schumacher
SILICONE DIFF LUBE

Re-order # UI301

5

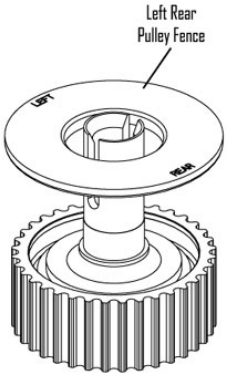

Schumacher

MENACE GTR

FRONT & REAR DIFFERENTIAL SERVICE

- (A) 2.5mm Dia Diff Ball x 12
- (B) Thin Sim x 1
- (C) 5 x 9 x 3 Ball Race x 1
- (D) M3 x 6 Grub Screw x 1

7

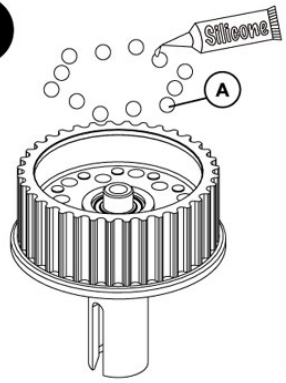

8

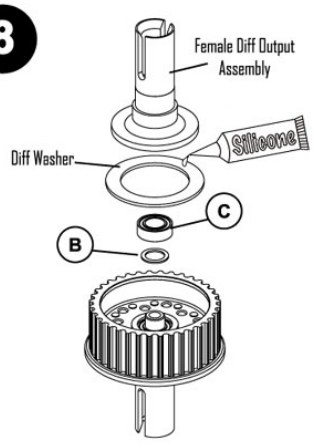

9

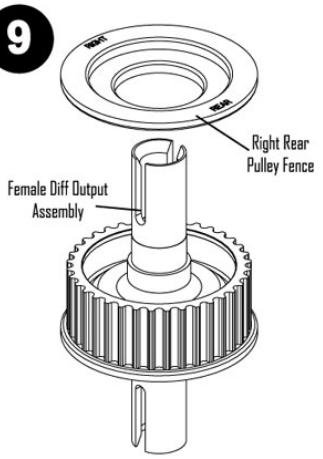

10

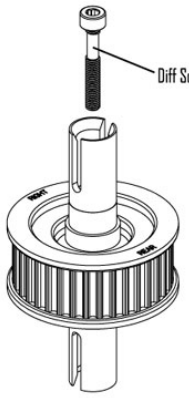

11

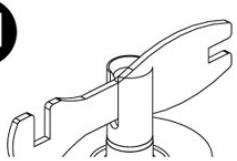

12



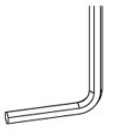

THEN UNDO ¼ TURN.

THEN LOCK THE SETTING WITH THE GRUB SCREW.



13

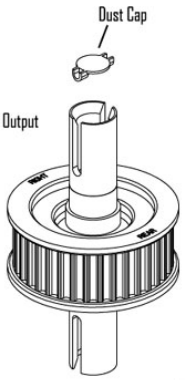

Schumacher

MENACE GTR

TRANSMISSION

A — M3 x 10mm Csk TORX Head x 4

B — M3 x 12mm Csk TORX Head x 8

1

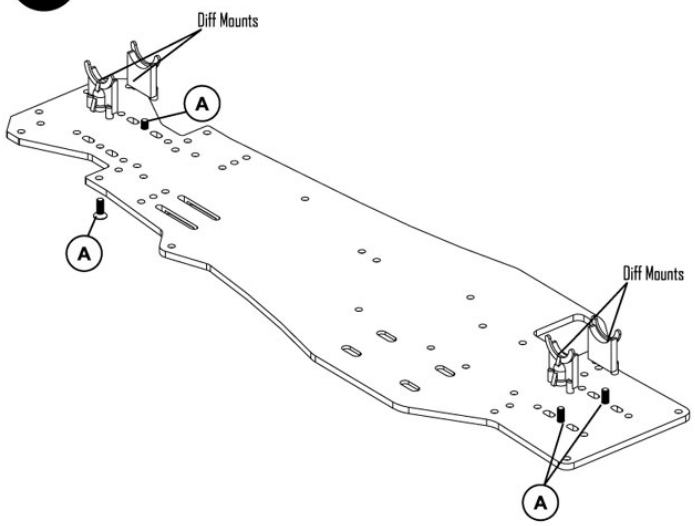

2

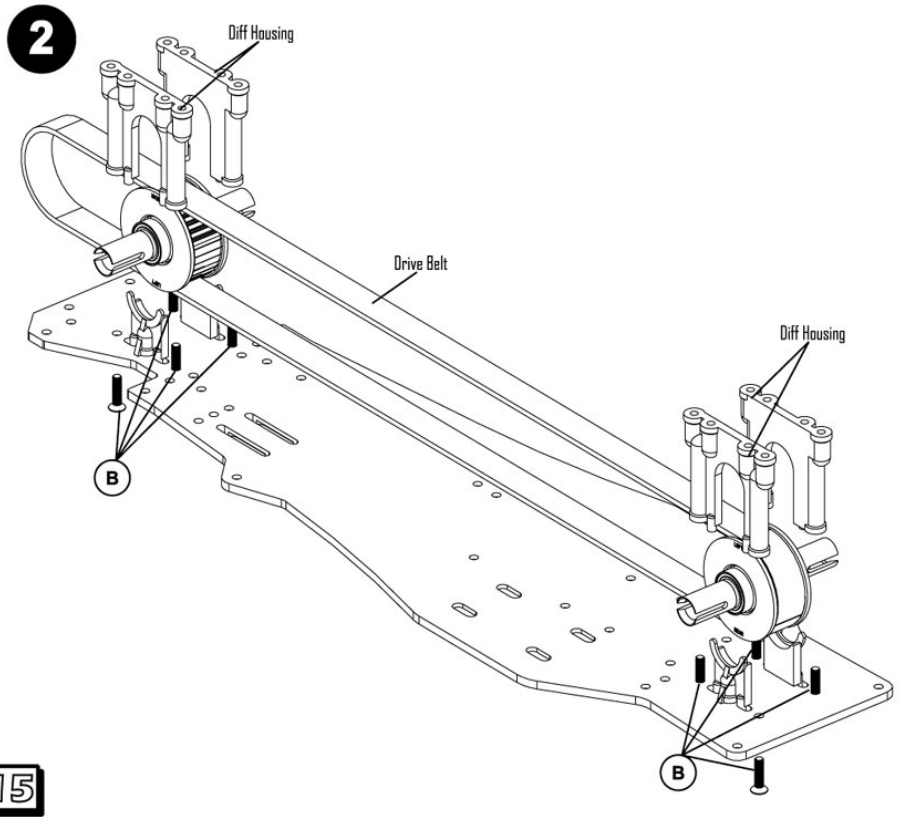

Schumacher

MENACE GTR

TRANSMISSION Cont.

A — 5 x 10 Ball Bearing x 2

B — 5 x 9 Flanged Ball Bearing x 4

C — M3 x 12mm Csk TORX Head x 4

3

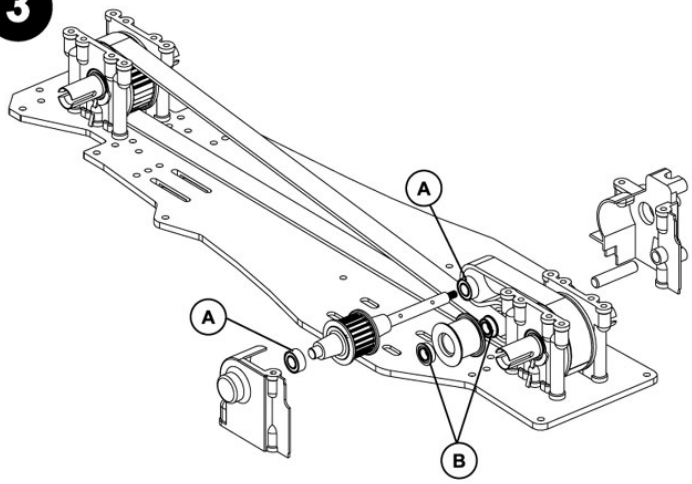

4

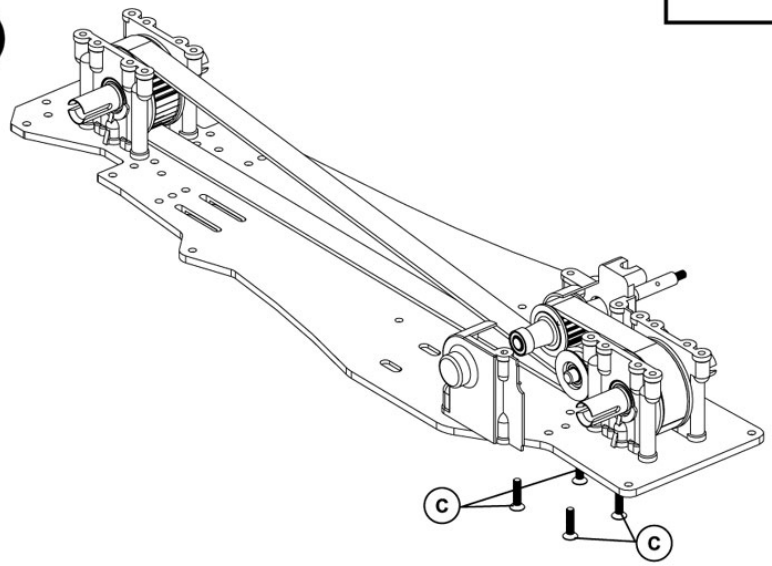

5

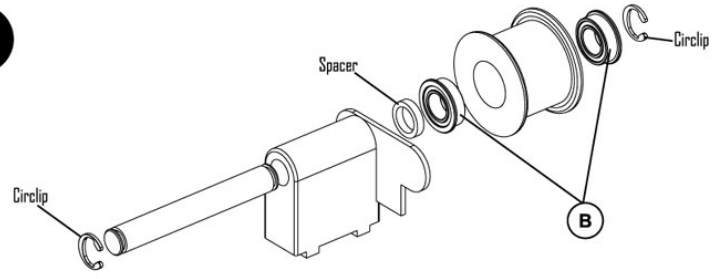

Schumacher

MENACE GTR

TRANSMISSION Cont.

A — M3 x 8mm Csk TORX Head x 6

B — M3 x 10mm Button Head x 2

C — M3 Washer x 1

D — M3 x 4mm Button Head x 1

6

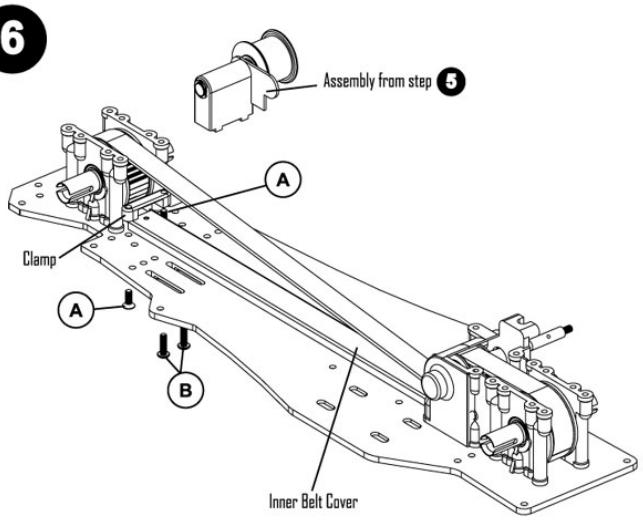

7

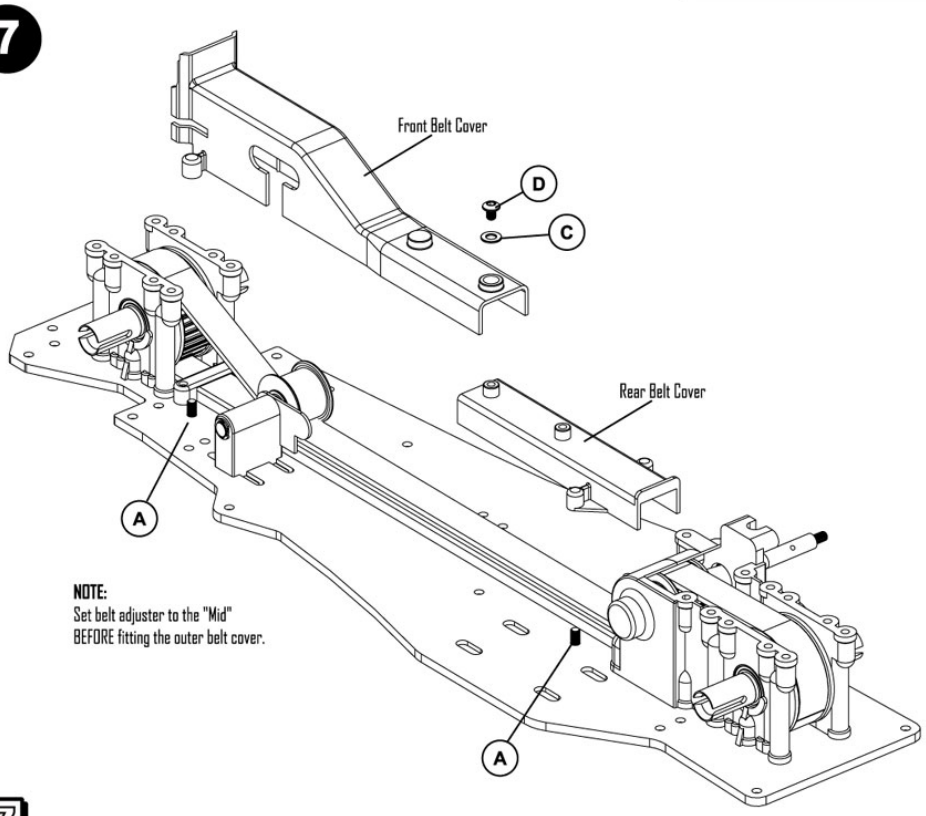

NOTE:
Set belt adjuster to the "Mid"
BEFORE fitting the outer belt cover.

Schumacher

MENACE GTR

TRANSMISSION Cont:

A — 1.5mm x 10mm Pin x 1

B — M3 x 10mm Pan TORX Head x 4

C — M3 x 3 Grub Screw

8

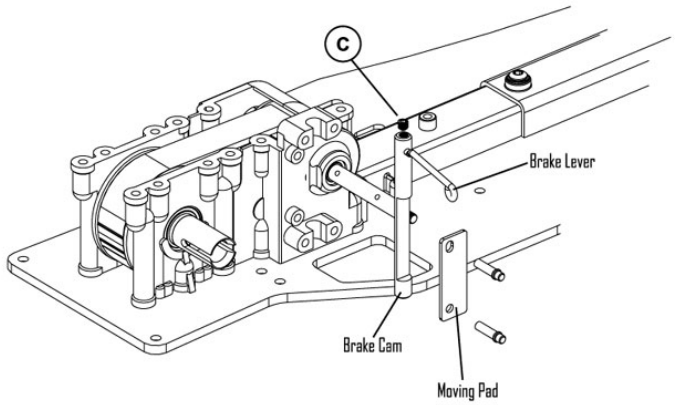

9

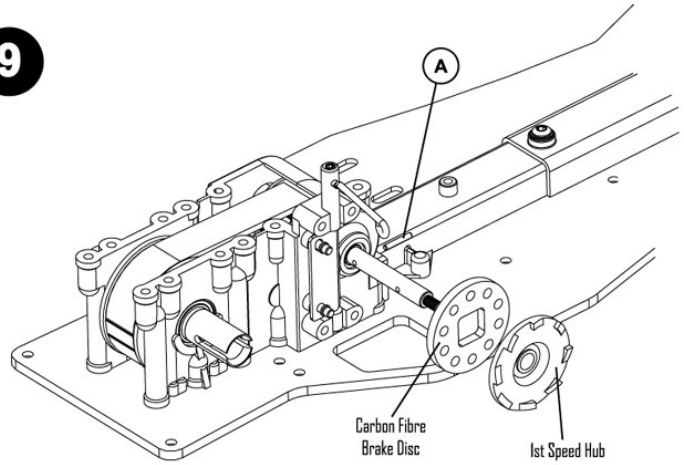

10

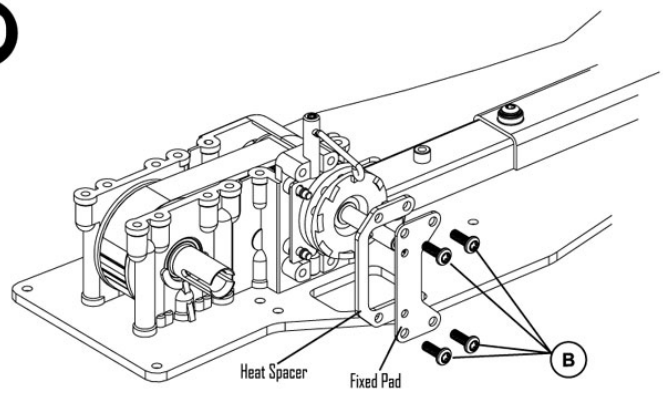

Schumacher

MENACE GTR

TRANSMISSION Cont.

- A — 5 x 9 Flanged Ball Bearing x 6
- B — M3 Steel Washer x 1
- C — M3 Nyloc Nut x 1
- D — 1.5mm x 13.8mm Pin x 1

11

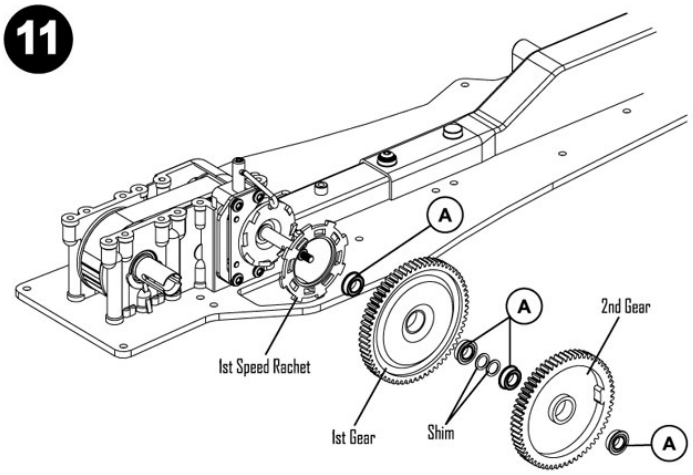

12

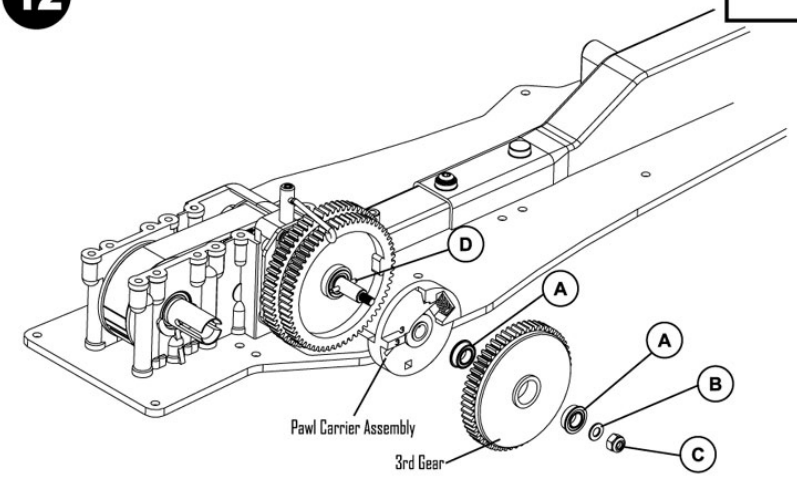

13

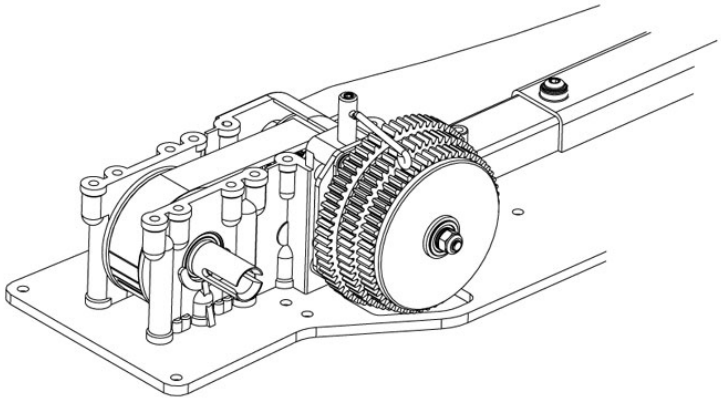

Schumacher

MENACE GTR

1

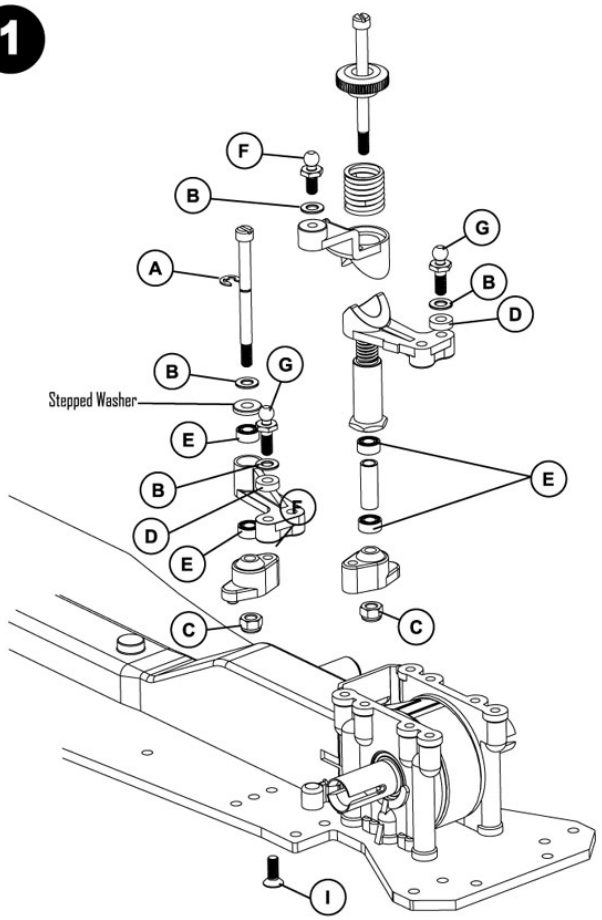

STEERING

- A — "E" Clip x 1
- B — M3 Steel Washer x 4
- C — M3 Nyloc Nut x 2
- D — 2mm Spacer x 2
- E — 1/8" x 1/4" Ball Race x 4
- F — Ball Stud Short M3 x 3
- G — Ball Stud Long M3 x 2
- H — M3 x 10mm Csk TORX Head x 4
- I — M3 x 8mm Csk TORX Head x 4

2

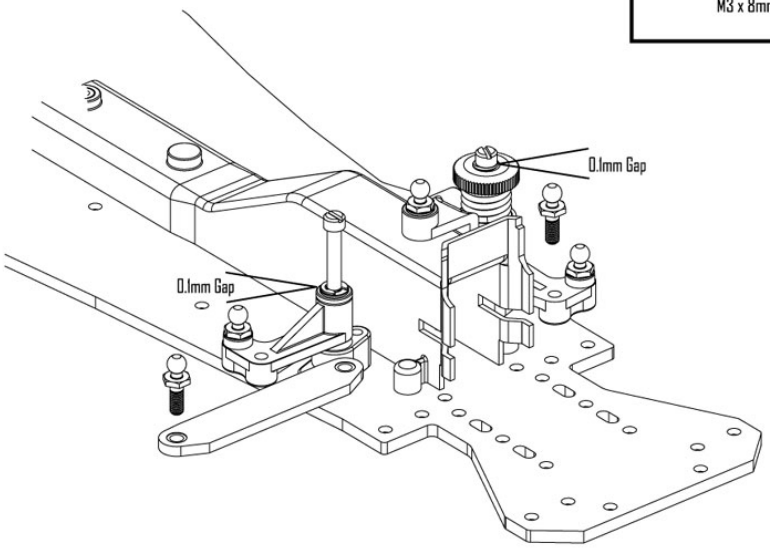

Schumacher

MENACE GTR

1

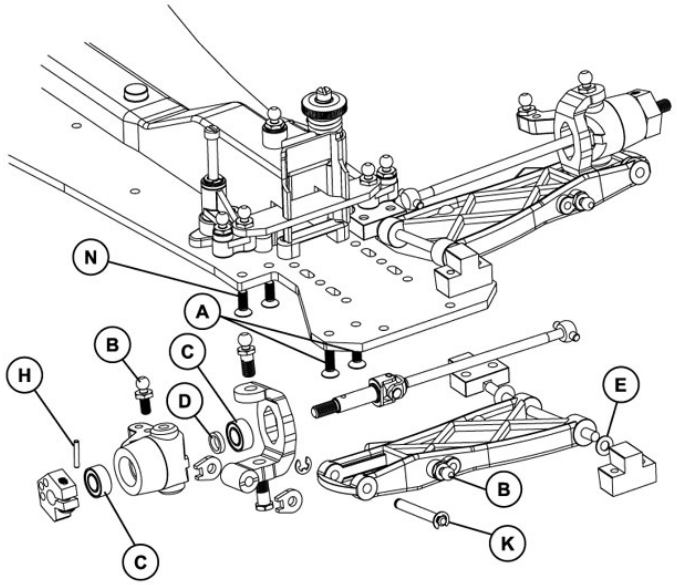

SUSPENSION

- A — M3 x 10mm Csk TORX Head x 4
- B — Ball Stud Short M3 x 6
- C — 5 x 10 Ball Race x 8
- D — THICK shim x 4
- E — M3 Steel Washer x 2
- F — Ball Stud Long M3 x 2
- G — M3 Nyloc Nut x 4
- H — 1.5mm x 10mm Pin x 4
- I — M3 x 16mm Csk TORX Head x 4
- J — M3 x 20mm Csk TORX Head x 2
- K — "E" Clip x 8
- L — M3 Nut x 4
- N — M3 x 8mm Csk TORX Head x 4

2

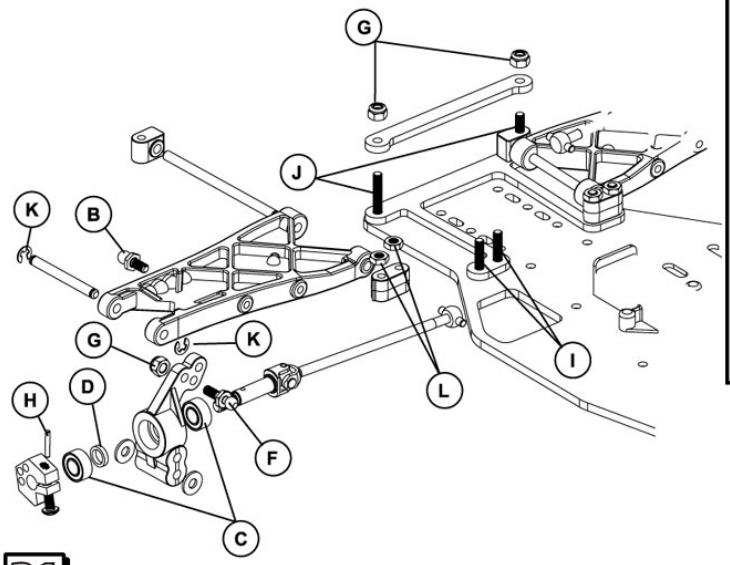

Schumacher

MENACE GTR

Thunder Tiger Pro 21 Engine Parts

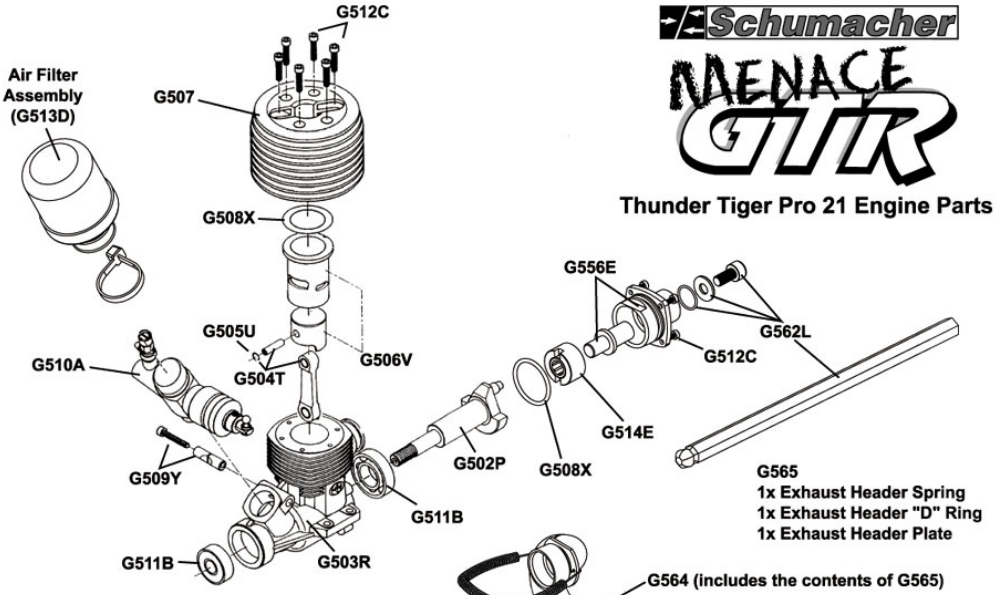

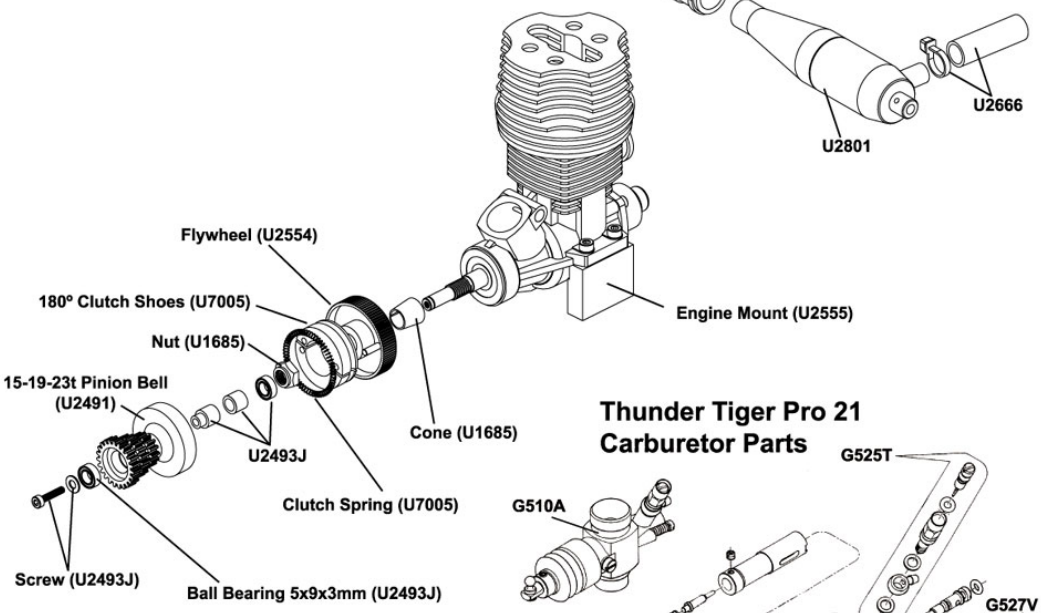

Thunder Tiger Pro 21 Carburetor Parts

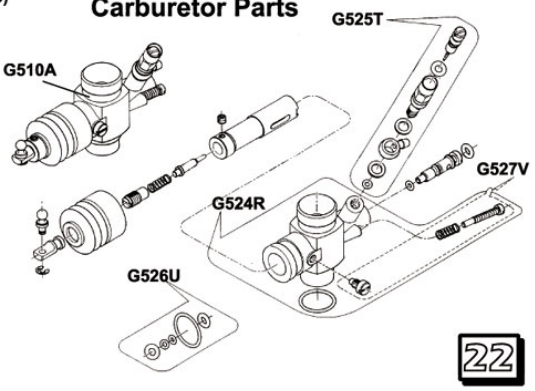

TRACKSETTINGS

Schumacher MENACE GTR

FRONT TOE-IN

The front toe-in is set by adjusting the steering trackrod turnbuckles. Toe-In = A less than B
Toe-Out = A greater than B
Toe-in will give a more stable car, but will give less sharp turn in. We recommend to start at about 0° each side.
Toe-out will give the opposite, less stability with sharper turn in to the corners.

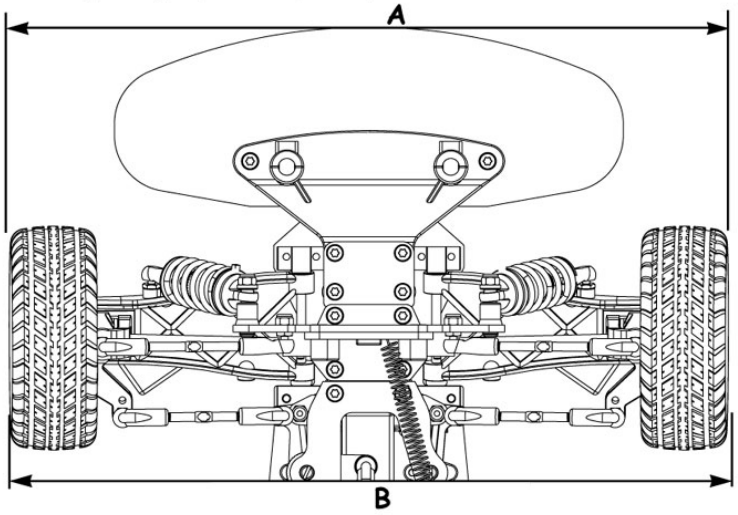

FRONT & REAR CAMBER

Car as standard will have 1.5° negative camber (the top of the wheels lean inward). Set the camber to 1.5° negative by adjusting the top turnbuckle.

Reducing the camber gives a more progressive slide, but may give less grip.

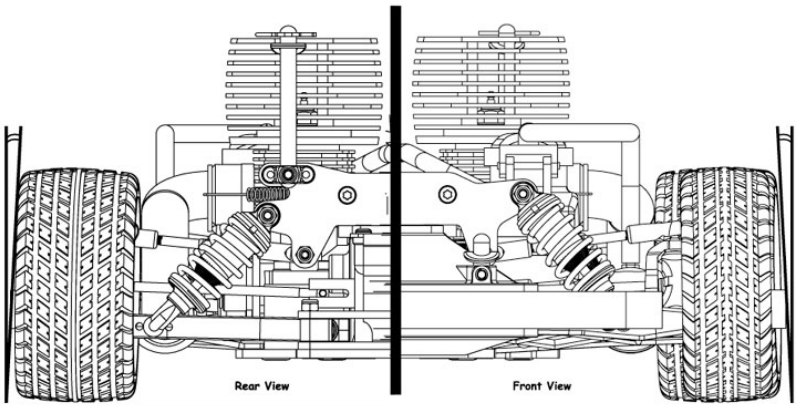

WARNING

Please read this.....

The following information is very important to the performance and reliability of your Schumacher Nitro Car. Please read it!

1. Read the instructions fully.

2. Use good quality fuel with synthetic oil such as Fantom, Dynaglow or Blue Thunder, with 10% to 25% nitro content. These are the only fuels we recommend. We do not recommend castor oil based fuels, as it leaves a "sticky residue" which can cause the "e" start one way bearing to slip. A higher nitro content fuel will give more power, but will make the engine run hotter.

3. NEVER run the engine without the air filter fitted.
If running in wet conditions, we recomend fitting a waterproof air filter.

4. Don't run the car at full throttle with the wheels off the ground, the engine WILL blow up in a matter of seconds.

5. Learn to use your power with respect. Very few surfaces can cope with full power. If you use full power everywhere you WILL break things!

6. ALWAYS drive your car safely, away from public roads, and be aware of any people or animals near you. MODEL CARS CAN BE DANGEROUS!

7. Always ensure the transmitter & receiver batteries are fully charged
before use.

8. Set the torque on your cordless drill to the lowest possible setting, that will turn the engine over.

9. Always ensure that all nuts and screws are tight.

10. Always ensure gear mesh adjustment is correct.

11. Run in a new engine by using a rich fuel mixture, to ensure plenty of lubrication, and use no more than half throttle for the first 2 or 3 tanks of fuel.

12. Running tyres with a larger diameter of those supplied with the kit will over-gear the car. This will cause excessive loads and thus un-due wear and tear.

13. Superglue the tyres to the wheels.

GUARANTEE:
All parts are guaranteed against defect in manufacture. Conditions of use of this product are out of our control and therefore we cannot guarantee parts against failure in use. This is an ultra high performance car, if used without due respect failure could occur. If you have any problems with this product your first point of contact should be the place of purchase.

Schumacher

MENACE GTR

>>>>>>>> NITRO - ON ROAD

K048 Menace GTR - 1/8 Street Racer, no Radio
K049 Menace GTR - 1/8 Street Racer - RTR

>>>>>>>> KIT OPTIONS

G988 R/C Deal - Nitro

>>>>>>>> CHASSIS PARTS

U119 Aerial Tube - Pack 4
U2457 Bumper & Body Mounts - Mission
U2480 Body Posts & R Clips (pk 4)
U2540 Radio Box - Fusion
U2677 Dirt Cover, Fr+Rr Diffs-Menace/Fusion
U2678 Dirt Covers, belts - Menace
U2679 Dirt Cover, gears - Menace
U2802 Foam Bumper - GTR
U2803 Instruction Manual - GTR
U2804 CNC Alloy Chassis - GTR
U2807 Top Deck - GTR

>>>>>>>> BODYSHELLS & DECALS

FR81 Frewer GTR 1/8th scale, clear
FR81P Frewer GTR 1/8th Pre Painted
FR82 Frewer 911 GT1, clear
U2670 Decal Sheet - Menace pk 3

>>>>>>>> SUSPENSION

U1248 Ball Bearing Set - Steering Post (2prs)
U1429 Turnbuckle Adjuster - 53mm (pr)
U1440 Pivot Pin; grooved 25mm x 1/8" (pr)
U1445 Steering Posts & Washer - 2000
U1446 Servo Saver Metal Parts - 2000 Series
U1481 Front Steering Post & Pivot Blocks
U1704 "Ball Grippa" Sockets (pk 8)
U2563 Steering Lever & Front Strap - Fusion
U2661 Pivot Pin, front inboard 10 degree (pr)
U2662 Pivot Pin; plain 53mm x 1/8" (pr)
U2663 Steering Link, 104mm
U2664 Steering Yoke Pivot Set - 2 pairs
U2667 Servo Saver Spring - Soft & Hard 2 pcs
U2686 Front Wishbone - Menace (pr)
U2687 Rear Wishbone - Menace (pr)
U2688 Rear Hub Carrier - Menace (pr)
U2689 Steering Yoke - Menace (pr)
U2690 Upper Suspension Mount - Menace
U2692 Front Hub Carrier - Menace (pr)
U2800 Alloy Front Pivot Block - GTR (pr)
U2805 Front Shock Bkt & Straps etc - GTR
U2806 Rear Shock Bkt & Straps etc - GTR
U750 "Ball Grippa" Short Stud Ball Joint(8pr)
U797 Turnbuckle Adjuster-35mm (pr)
U798 Turnbuckle Adjuster-45mm (pr)
U851 "Ball Grippa" Long Stud Ball Joint(8pr)

>>>>>>>> SHOCK ABSORBERS

U1202 Piston Rod - Long Shock (pr)
U1310 Shock Mouldings-Vari Click Piston (pr)
U1557 Ultra-Short Shock Rod (pr)
U1558 Purple Ultra-Short Shock Body (each)
U1559 Purple Ultra-Short Shock Absorbers (pr)
U1818 Purple Alloy Shock Seal Housing (pr)
U1921 Spring Tuning Set - SST Touring (4 prs)
U1923 Grey Shock Springs-SST; rate 10 (pr)
U1924 Blue Shock Springs-SST; rate 15 (pr)
U1925 Red Shock Springs-SST; rate 20 (pr)
U1926 Yellow Shock Springs-SST; rate 25 (pr)
U2024 Purple Ultra Short Shock Bodies - pk4
U2143 One Piece Shock Pistons - 4 sets of 3
U2292 Purple Alloy Threaded U/Sh Shock Body
U2293 Alloy Threaded Shock Collar
U2297 Threaded Shock Bodies & Collar-2prs
U2660 Alloy Shock Body, Long Purple (pr)
U2668 Shock Spring - R6 (pr)
U2778 Purple Alloy Shocks, Front - Menace (pr)
U2779 Purple Alloy Shocks, Rear - Menace (pr)
U613 Spring Stop & Spacer Mouldings (pr)
U835 Vari Shock Seal Pack (pr)

>>>>>>>> SHOCK OIL

G010 Pure Silicone Shock Oil - 10w
G015 Pure Silicone Shock Oil - 15w
G020 Pure Silicone Shock Oil - 20w
G025 Pure Silicone Shock Oil - 25w
G030 Pure Silicone Shock Oil - 30w
G035 Pure Silicone Shock Oil - 35w
G040 Pure Silicone Shock Oil - 40w
G045 Pure Silicone Shock Oil - 45w
G050 Pure Silicone Shock Oil - 50w
G055 Pure Silicone Shock Oil - 55w
G060 Pure Silicone Shock Oil - 60w
G070 Pure Silicone Shock Oil - 70w
G080 Pure Silicone Shock Oil - 80w
G100 Pure Silicone Shock Oil - 100w
G120 Pure Silicone Shock il - 120w

>>>>>>>> TRANSMISSION

U1301 Silicone Diff Lube - Pot
U1439 Ball Bearing - 5 x 9 x 3 Non Fl. (pr)
U1635 Disc Brake Cam - Nitro 10/2000
U1957 Moly Axle Grease - Pot
U2408 Diff Washers - TT (pair)
U2449 Diff & Layshaft Mount Set - Mission
U2490 Moulding Set - 3 Speed
U2492 Spring, Shim & Pin Set-3 Spd (5&7k rpm)
U2495 Ball Bearing - 5 x 9 x 3 Flanged (pr)
U2542 Diff Balls, 2.5mm Chrome Steel (pk 12)
U2546 Layshaft Assembly - Fusion
U2547 Front & Rear Idler Shaft + Mount - Fusion
U2548 Idler Rollers - Fusion (pk2)
U2549 Layshaft Mounts, pair - Fusion
U2565 Diff Pulley & Fences - Fusion
U2588 C/F Brake Disc Repair Set
U2629 Pro-Diff Rebuild Kit
U2658 Steel Diff Output, male - Menace
U2659 Steel Diff Output, female - Menace
U2675 Belt - Menace
U2682 Wheel Hex - Menace (pr)
U2684 Spring,Shim & Pin Set - 3 Spd (5k&8.5k)
U2698 Ball Bearing - 5 x 10 x 4 Sealed (pr)
U2699 Ball Bearing - 10 x 15 x 4 Sealed (pr)
U730 Thrust Bearing

>>>>>>>> NITRO POWER PARTS

G502 Crankshaft - 21XT (AA0265)
G503 Crankcase - 21XT (AN0318)
G504 ConRod;Pin,C/clips-21XT,AN0349;50;51
G505 Circlip - 21XT (AA0351)
G506 Piston & Liner - 21XT (AN0549)
G507 Cylinder Head - 21XTR (AA0354P)
G508 Gasket set - 21XT (PN0061)
G509 Carb Retaining Bolt - 21XT (AN0356)
G510 Carb Complete Assembly - 21XT (9245)
G511 Bearings - 21XT (PN0166)
G512 Screw Set - 21XT (PN0060)
G513 Air Filter Set - 21XT (9268)
G514 One Way Clutch Set - 21XT (AN0364)
G524 Carb Body - 21XT (PN1046)
G525 Needle Valve Assembly - 21XT (PN1047)
G526 "O" Ring Set - 21XT (PN1051)
G527 Throttle Stop Screw Set - 21XT (PN1052)
G556 E-Start Assembly - 21XT & Big 6
G561 Cordless Drill - E-Start (UK 240v Charger)
G562 Hex Drive & Screw - E-Start
G563 Nitro 21 E-Start Engine - Complete
G565 O Ring, Spring and Plate - Header Pipe
G567 Air Filter - Fusion 21
G569 Fuel Tank 125cc - Menace
G570 Exhaust Header Pipe - Menace
U1118 Competition Glo Plug
U1119 Fuel Pipe - 1/2 metre
U1685 Crank Nut; Washer & Cone-21/XR15
U2491 15-19-23t Pinion Bell - 3 Speed
U2493 Service Kit, Pinion - 3 Speed
U2554 Flywheel - 21
U2555 Alloy Engine Mounts - Fusion (pair)
U2556 Chassis Buttons & Engine Mount Screws
U2562 Carb & Brake Links - Fusion/Menace
U2627 Competition Glow Plug - Card 12 pcs
U2666 Fixing Kit, tuned pipe - Menace
U2801 CNC Alloy Tuned Pipe - GTR
U2814 Air Filter, waterproof - 1/8th
U7005 180 Deg Clutch Shoes & Spring

Schumacher

MENACE GTR



>>>>>>>> SPEED SECRET - OPTION PARTS

G200	ZX1 - Microlube
H1010	Body Clips - Flourescent Yellow (pk10)
H1011	Body Clips - Flourescent Green (pk10)
H1012	Body Clips - Flourescent Red (pk10)
H1013	Body Clips - Metallic Red (pk10)
H1014	Body Clips - Metallic Blue (pk10)
H1015	Body Clips - Metallic Purple (pk10)
S5008	Schumacher BANNER
U1954	Pro - Thrust Bearing
U2135	M4 Nyloc Wheel Nut - Purple Alloy (pk4)
U2165	Alloy Block+ Flex Post;vert-Body Mount
U2187	M3 Nyloc Nut - Purple Alloy (pk8)
U2459	Tungsten Carbide Diff Balls 2.5mm(pk12)
U2462	Alloy Diff Mount - Mission
U2541	Pro-Diff, assembled - Fusion/Menace
U2553	21-25-29t Speed Pinion Bell - 3 Speed
U2648	Alloy Yoke - Menace (pr)
U2649	Alloy Front Wishbones - Menace (pr)
U2650	Alloy Rear Wishbones - Menace (pr)
U2651	Alloy Susp Mount,Fr/Rr - Menace (ea)
U2652	Alloy Front Hub Carrier - Menace (pr)
U2653	Alloy Rear Hub Carrier - Menace (pr)
U2776	Pivots, Alloy Front Hub Carrier
U2780	Alloy Ratchet & Brake Hub - Menace (pr)
U2781	Titanium Shock Mount Post - Set 4
U2810	M4 Nyloc Wheel Nut - Red Alloy (pk4)
U2811	M4 Nyloc Wheel Nut - Blue Alloy (pk4)
U2812	M4 Nyloc Wheel Nut - Black Alloy (pk4)
U2813	M4 Nyloc Wheel Nut - Gold Alloy (pk4)
U2815	C/F Front Shock Bkt & Straps etc - GTR
U2816	C/F Rear Shock Bkt & Straps etc - GTR
U2817	C/F Top Deck - GTR

>>>>>>>> TEAM CLOTHING

G314L	New "Team" Cap - Large & XL
G314M	New "Team" Cap - Small & Med
G318L	"T" Shirt - Dark grey - Large
G318M	"T" Shirt - Dark grey - Medium
G318S	"T" Shirt - Dark grey - Small
G318X	"T" Shirt - Dark grey - XLarge
G318Z	"T" Shirt - Dark grey - XXLarge
G319L	Polo Shirt - Black/Grey - Large
G319M	Polo Shirt - Black/Grey - Medium
G319S	Polo Shirt - Black/Grey - Small
G319X	Polo Shirt - Black/Grey - Xlarge
G319Z	Polo Shirt - Black/Grey - XX large
G320L	Sweat Shirt - Light grey - Large
G320M	Sweat Shirt - Light grey - Medium
G320S	Sweat Shirt - Light grey - Small
G320X	Sweat Shirt - Light grey - XLarge
G320Z	Sweat Shirt - Light grey - XX Large
G321L	Ski Jacket, Red/Black Embroidered-Lg
G321M	Ski Jacket, Red/Blk Embroidered-Med
G321XL	Ski Jacket, Red/Black Embroidered-XL

>>>>>>>> ELECTRONICS

G718	GP Alkaline AA Pencell, Pack 4
G719	GP Alkaline "D" Cell
G726	PowerRacing 1000NiMh-6.0v Rx FlatPk
G727	PowerRacing 1000NiMh - 6.0v Rx Hump
G832	Radio Control 27Mhz; 2 Stick + 2 Servos
G837	Mini Temp Gun - 420F 230C
G845	Glowstart & Charger UK 240v
H1023	Glow Start - "D" Cell Power

>>>>>>>> SPEED PACKS

U1540	SPEED PACK - Short M3 Pan Hd
U1548	SPEED PACK - M3 Washers
U1551	SPEED PACK - "E" Clips (pk2x8)
U1552	SPEED PACK - "R" Clips (pk 10)
U1606	SPEED PACK - Servo Tape
U1633	SPEED PACK - Needle Rollers (pk)
U1771	SPEED PACK - Tywraps (pk8)
U2128	SPEED PACK - Grub-Set Screws M3 M4
U2589	SPEED PACK - Torx M3 x 8 Csk
U2590	SPEED PACK - Torx M3 x 10 Csk
U2591	SPEED PACK - Torx M3 x 12 Csk
U2638	SPEED PACK - Torx M3x16mm Csk Hd
U2639	SPEED PACK - Torx M3x20mm Csk Hd
U2640	SPEED PACK - Torx M3x6mm Pan Hd
U2641	SPEED PACK - Torx M3x8mm Pan Hd
U2642	SPEED PACK - Torx M3x10mm Pan Hd
U2643	SPEED PACK - Torx M3x12mm Pan Hd
U2644	SPEED PACK - Torx M3x16mm Pan Hd
U2645	SPEED PACK - Torx M3x20mm Pan Hd
U2685	SPEED PACK - Torx M3 x 6 Csk

>>>>>>>> TITANIUM

U1573	Titanium Turnbuckle, purple - 53mm (pr)
U1576	Titanium Pivot Pin, purple - 25mm (pr)
U1577	Titanium Pivot Pin, purple - 29mm (pr)
U1905	Titanium Turnbuckle, purple - 35mm (pr)
U1906	Titanium Pivot Pin, purple - 53mm (pr)
U2566	Titanium Turnbuckle - 45mm (pr)

>>>>>>>> TOOLS

H1009	Lexan Scissors, curved
H1016	Fuel Bottle - 250cc
H1017	Fuel Bottle - 500cc
H1025	4 Way Glow Plug Wrench
HW002	Wiha Precision Hex Driver - 1.5mm
HW003	Wiha Precision Hex Driver - 2.0mm
HW004	Wiha Precision Hex Driver - 2.5mm
HW006	Wiha Precision Nut Driver - M3
HW007	Wiha Precision Nut Driver - M4
HW008	Wiha Torx Driver - T10
PYS1010	Alloy Grip Wrench Set, 1.5,2.0,2.5,3.0mm.
PYS1020	Alloy Grip Wrench Set, .05,1/16,5/64,3/32"
U2789	Schumacher Hex Driver - 1.5mm
U2790	Schumacher Hex Driver - 2.0mm
U2791	Schumacher Hex Driver - 2.5mm
U2793	Schumacher Hex Driver - 0.050"
U2794	Schumacher Driver - T10 TORX
U2795	Schumacher M3 Nut Driver
U2796	Schumacher M4 Nut Driver

>>>>>>>> 2.2" ON-ROAD TYRES

U6613	Road & Track - RT1 - Front - Green
U6614	Road & Track - RT1 - Rear - Green
U6709	Road & Track - RT1 - Front - B30
U6710	Road & Track - RT1 - Rear - B30

>>>>>>>> WHEELS & INSERTS - 2" & 2.2"

U1458	Rear Wheel; Smooth-2.2" - CAT/Fbl
U1516	Front Wheel; Smooth - 2.2" - CAT
U1614	Front Wheels; White 3 Spoke CAT
U1615	Rear Wheels; White 3 Spoke - CAT/Fbl
U2808	Chrome Front Wheel - GTR
U2809	Chrome Rear Wheel - GTR
U6652	Foam Tyre Insert; Hard - Front - CAT
U6653	Foam Tyre Insert; Hard - Rear - CAT

U6709 (Fr)
U6710 (Rr)

B30 Compound Pro TYRES.

Front and rear super grip tyres. When you need that "little bit more".



U1516 (Fr)
U1458 (Rr)

White Dish Wheels.

The most aerodynamic wheel available. Light and strong. A must for the serious racer.



U1614 (Fr)
U1615 (Rr)

White 3 Spoke Wheels.

Give your GTR the "open wheel" look!



U2816

Carbon Fibre Rear Shock Mount & Strap.

Lightweight & Super stiff.



U2815

Carbon Fibre Front Shock Mount & Strap.

Lightweight & Super stiff.



U2553

High Speed Pinion Bell 21-25-29 tooth.

Make your GTR even quicker!



U2780

Alloy Ratchet & Brake Hub.

Alloy version of standard plastic version. Offers better durability.



U2817

Carbon Fibre Top Deck & Straps.

Lightweight & Super stiff.



U1818

Alloy Shock Seal Housing.
Purple CNC machined housing. Offers strength and a super smooth action.



U2135

Purple Alloy M4 Nyloc Wheel Nuts.

Lightweight flanged wheel nuts in funky purple.



U2653

Alloy Rear Hub.
CNC machined, purple alloy. Offers a precise bearing fit and greater strength than the standard unit.



U2648

Purple Alloy Yoke.

CNC Machined, offers more strength and precision.



U2651

Alloy Suspension Mount.
CNC machined purple alloy mount. Stronger than the standard unit.



U2649(Fr)
U2650(Rr)

Alloy Wishbones.
CNC machined, purple alloy wishbones. Offering extra strength & durability. Available as front and rear pairs.



U2462

Purple Alloy Diff Mounts (pr).

CNC Machined, offers accurate diff location. And added strength.



U2652

Alloy Front Hubs (pr).
CNC Machined, purple alloy. Offers a precise bearing fit and greater strength than the standard unit.



U2459

Tungsten Carbide Diff Balls.

Super strong 2.5mm balls with excellent life and smoothness.



U2781

Titanium Shock Mount Post. (4)

Purple Titanium, lightweight and strong.



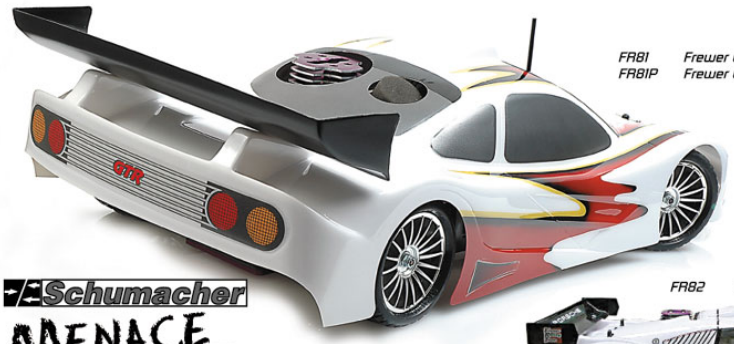

FR81 Frewer GTR Bodyshell. Clear
FR81P Frewer GTR Bodyshell. Painted

Schumacher

MENACE GTR

FR82 Frewer 911 GTI Bodyshell. Clear



Nitro Accessories



H1016 ~ 250cc Fuel Bottle
H1017 ~ 500cc Fuel Bottle
Both bottles feature a blue alloy pipe and include a stopper.

G837 ~ Mini Temp Gun
Ideal for measuring tyre, track and head temperature.





HW001 Wiha Precision Hex Driver - 1.3mm
HW002 Wiha Precision Hex Driver - 1.5mm
HW003 Wiha Precision Hex Driver - 2.0mm
HW004 Wiha Precision Hex Driver - 2.5mm
HW005 Wiha Precision Pozi Screw Driver
HW006 Wiha Precision Nut Driver - M3
HW007 Wiha Precision Nut Driver - M4
HW008Wiha Precision TORX Driver T10



U1118 ~ Fireball Glow Plug.



MC1 ~ Mega Cargo Carrier - Monster Truck (H-755mm x W-595mm x D-350mm)
MC2 ~ Mega Cargo Carrier - 1/8th Rally X (H-600mm x W-595mm x D-350mm)
MC3 ~ Mega Cargo Carrier - 1/10th Touring (H-600mm x W-595mm x D-350mm)
All carriers include three boxes with plastic handles, quad wheels and kick stand!



H1018 ~ 5 Way Glow Plug Spanner
Chrome Plated Plug Spanner 7mm, 8mm, 10mm, 12mm and 17mm across flats.

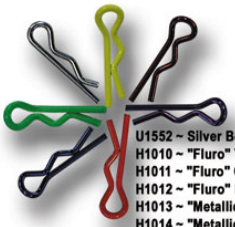

U1552 ~ Silver Body Clips
H1010 ~ "Fluro" Yellow Body Clips
H1011 ~ "Fluro" Green Body Clips
H1012 ~ "Fluro" Red Body Clips
H1013 ~ "Metallic" Red Body Clips
H1014 ~ "Metallic" Blue Body Clips
H1015 ~ "Metallic" Purple Body Clips
All body clips come in packs of ten.



H1009 ~ Curved Scissors
Designed for cutting out polycarbonate bodies.

H1023 ~ "D" Cell Glow Starter
Easy to use. Requires a "D" cell battery.



G020 ~ 20 weight (thin)
G025 ~ 25 weight
G030 ~ 30 weight
G035 ~ 35 weight
G040 ~ 40 weight
G045 ~ 45 weight
G050 ~ 50 weight
G055 ~ 55 weight
G060 ~ 60 weight
G070 ~ 70 weight
G080 ~ 80 weight
G100 ~ 100 weight
G120 ~ 120 weight (thick)
The best silicone shock oil you can buy!





H1025 ~ 4 Way Glow Plug Spanner
Chrome Plated Plug Spanner 7mm, 8mm, 10mm, and 12mm across flats.



G726 ~ 1000mah 6 volt RX Pack (5x1 Flat)
G727 ~ 1000mah 6 volt RX Pack (3x2 Hump)
Complete with plug and lead.

Schumacher
Distributed By:
SCHUMACHER RACING PRODUCTS Ltd.
71 - 73 Tenter Road ~ Moulton Park
Northampton ~ NN3 6AX ~ U.K.
Phone: 01604 790770 ~ Fax: 01604 790209
www.racing-cars.com