Instruction Manual v1.0

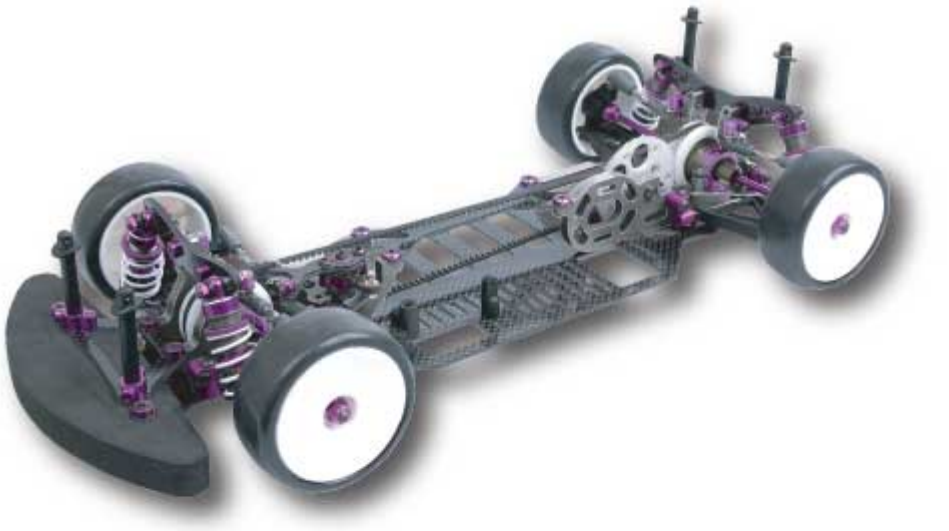

Schumacher Racing
71-73 Schumacher Racing
Moulton Park
Northampton

www.racing-cars.com

Schumacher USA Inc
6302 Benjamin Road
Suite 404
Tampa
Florida 33634
U.S.A

S1141

ADDITIONAL ITEMS REQUIRED (NOT SUPPLIED)



RADIO GEAR

Silicone shock oil

G020 ~ 20 weight (thin)
G025 ~ 25 weight
G030 ~ 30 weight
G035 ~ 35 weight
G040 ~ 40 weight
G045 ~ 45 weight
G050 ~ 50 weight
G055 ~ 55 weight
G060 ~ 60 weight
G070 ~ 70 weight
G080 ~ 80 weight
G100 ~ 100 weight
G120 ~ 120 weight (thick)





Mains & 12volt "AA" & "AAA" Charger G849

GP "AA" Pencell 2700 NiMh (pk4) G721



GP "AA" Alkaline Batteries G718 (Pack 4)



G856
PC6 Charger Ni-cd+Ni-MH

HW010 Wiha Precision Circlip Pliers



Curved Body Scissors H1009
Designed for cutting out polycarbonate bodies.



Scalpel



5.5A/F Sanner

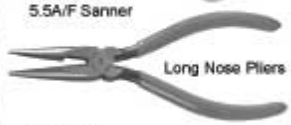

Long Nose Pliers



Hand File



U2789 Hex Driver - 1.5mm
U2790 Hex Driver - 2.00mm
U2791 Hex Driver - 2.5mm
U2795 M3 Nut Driver
U2796 M4 Nut Driver
U2818 Body Reamer



G747 IB 4200 Team 6pk
G751 IB 4200 Team 5pk



C4450
20g CS Cyno (Super Glue)
Thin, ideal for tyres.

MOTOR AND PINIONS



Z100 Keyence Rapida Pro ESC
Z200 Keyence eXstraight ESC



BODYSHELL PAINT



BODYSHELL



TOURING CAR TYRES
SEE CENTRE PAGES

IMPORTANT SAFETY NOTES

- This product is not suitable for children under the age of 14, without the direct supervision of an adult.
- Select an area for assembly that is away from the reach of small children. The parts in this kit are small and can be swallowed by children causing choking and possible internal injuries.
- Exercise care when using hand tools and sharp instruments during assembly.
- Carefully read all manufacturers warnings and cautions for any parts used in the construction and use of your m3.

In line with our policy of continuous development the exact details of the kit may vary.

IMPORTANT

Please read the entire manual before starting the assembly of your new MI-3.
Before you start Building your car checkout the setup Sheets at the end of the manual or online at www.racing-cars.com to ensure car is built to suit your driving style and track conditions

mi3

Rear Diff Assembly

1

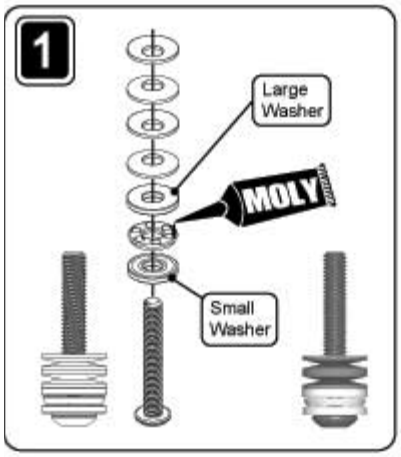

2

The Female output and the Thrust Race Assembly has been Pre-Assembled for you.

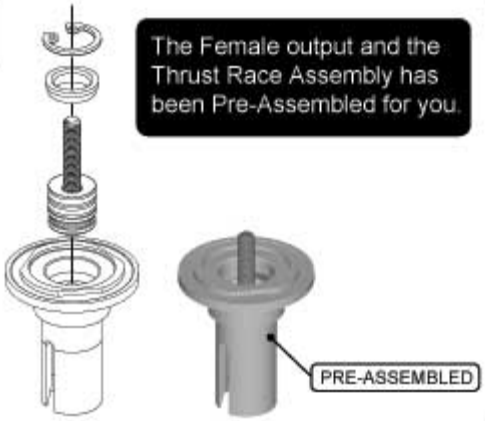

3

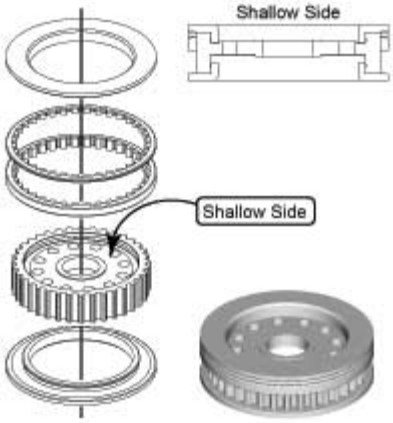

4

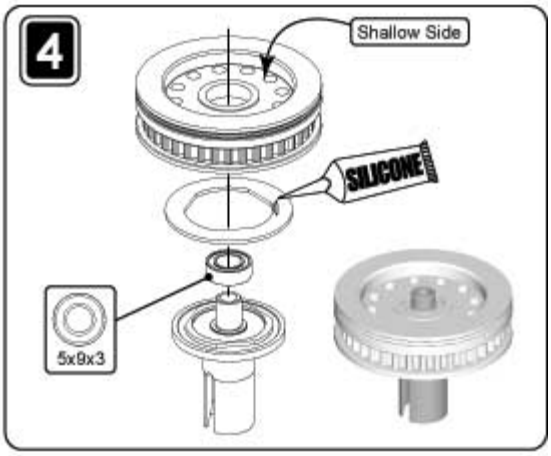

5



Schumacher

www.racing-cars.com

Diff Assembly cont..

6



7



8

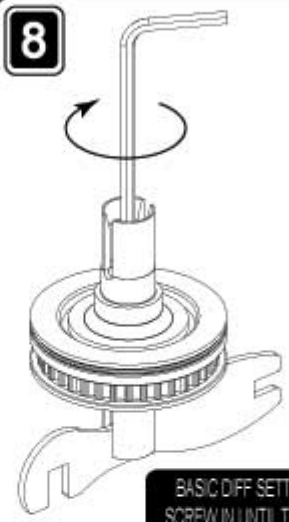

BASIC DIFF SETTING
SCREW IN UNTIL TIGHT
(ALL DISC SPRINGS FLAT)
THEN UNDO ¼ TURN

9

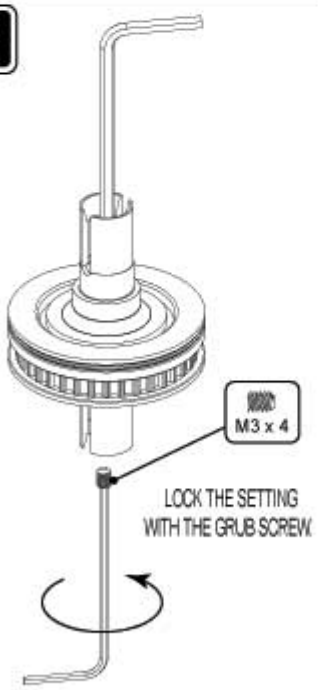

10



Final Assembly



www.racing-cars.com

Spool Assembly

1

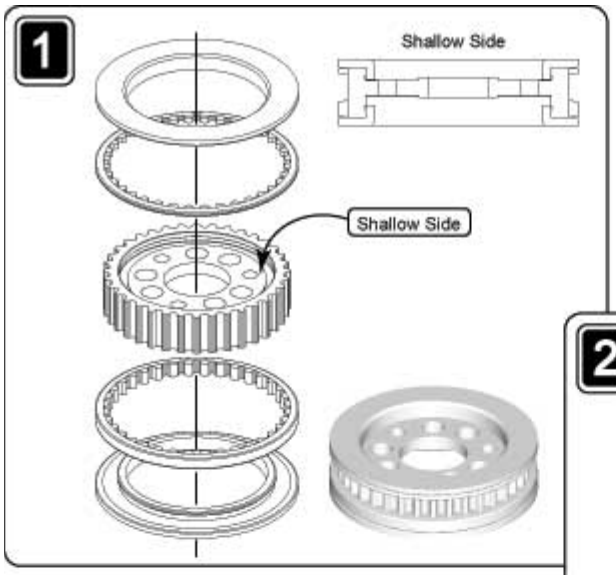

2

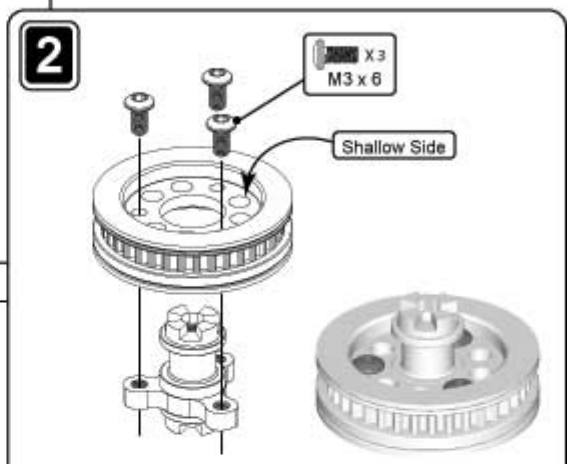

3

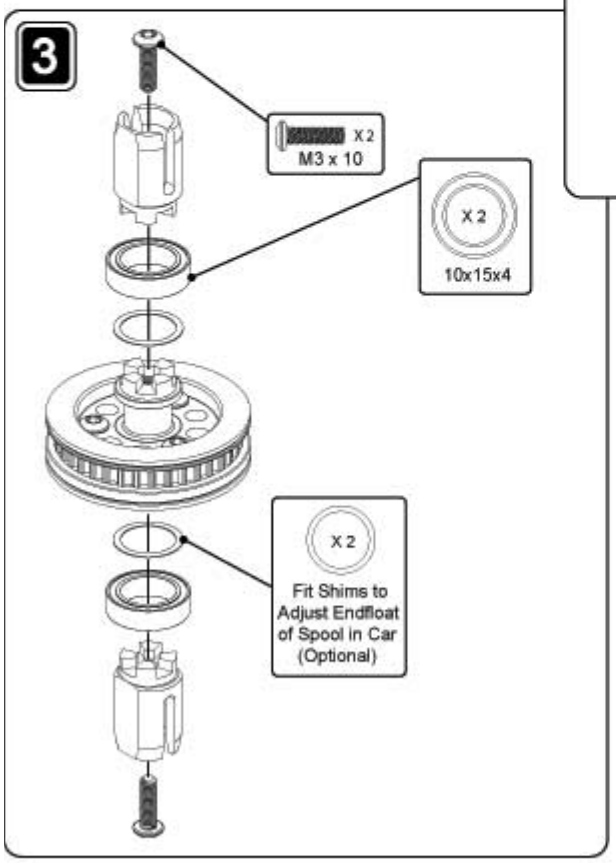

Final Assembly



Schumacher

www.racing-cars.com

Shock Assembly

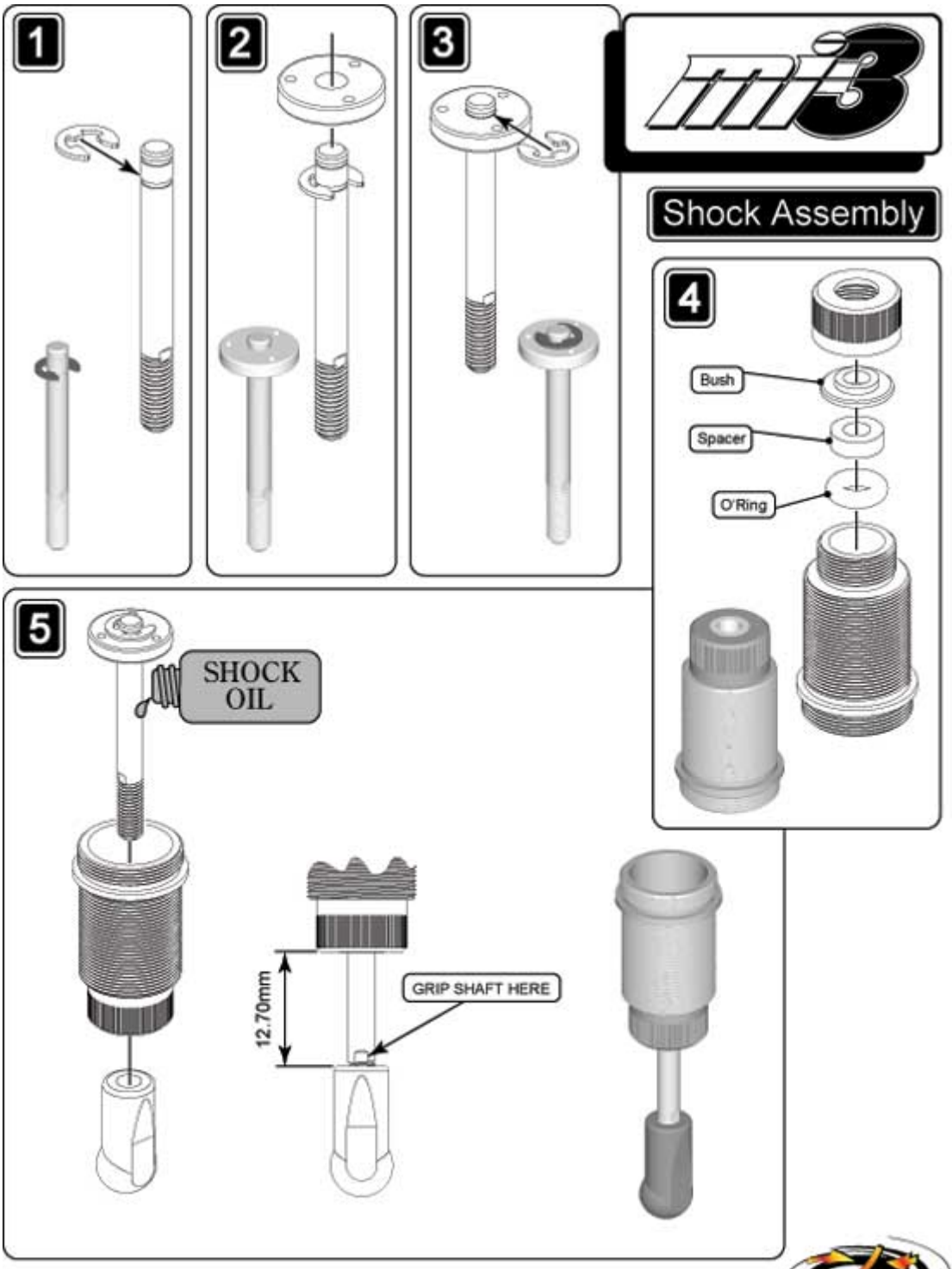

www.racing-cars.com

Shock Assembly cont..

6

SHOCK OIL

Fill Slowly With Shock Oil until Domed. Move Piston Up and Down Slowly and Allow all Air Bubbles to Rise and dissapear.

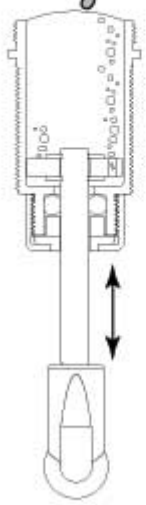

7

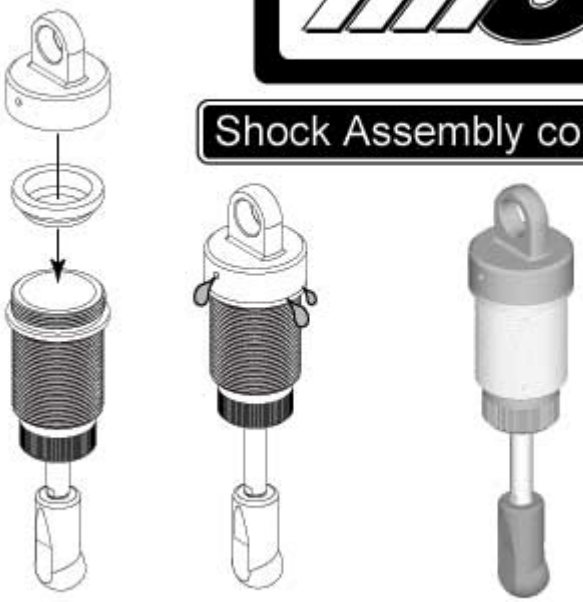

8



9

Lubricate the Threads with a SMALL amount of shock oil

Final Assembly



www.racing-cars.com

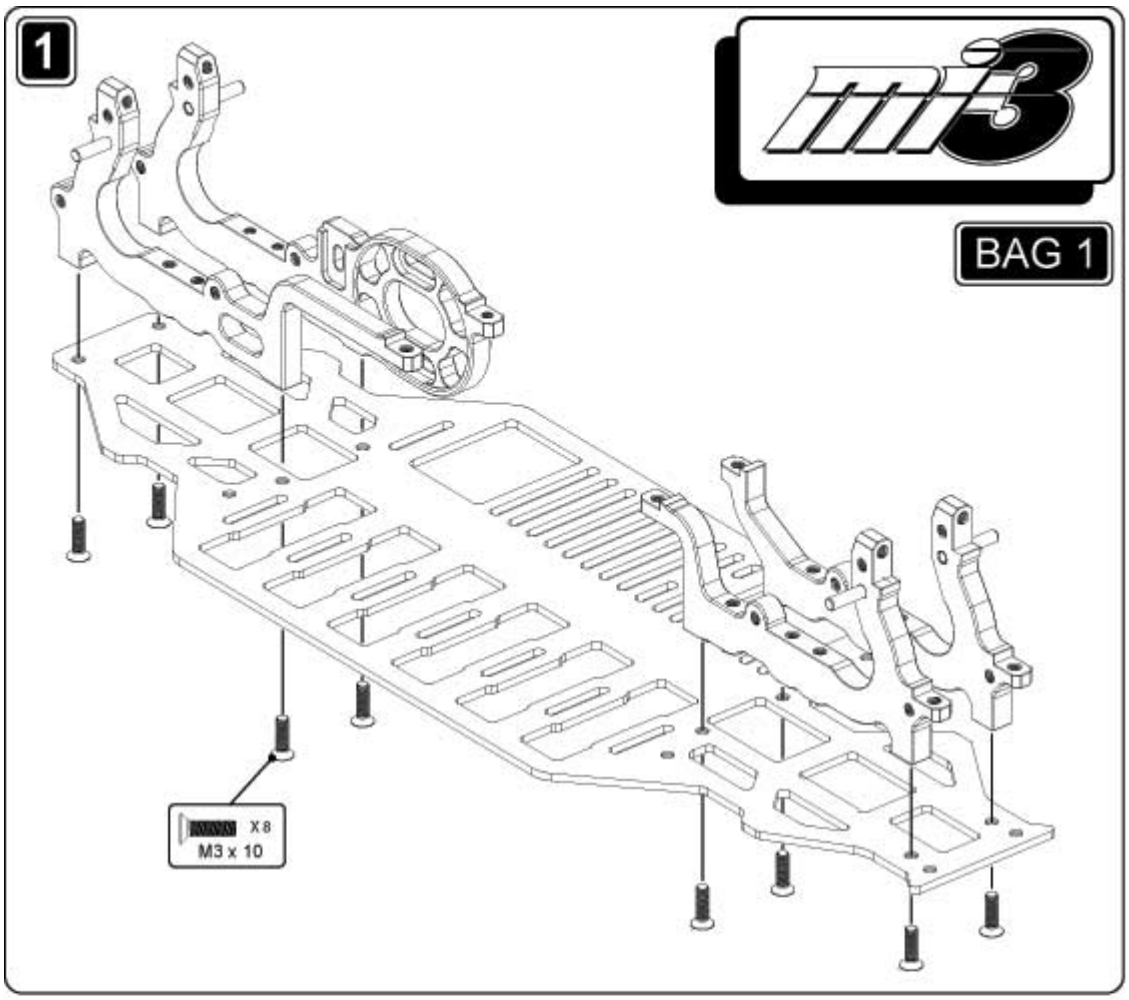

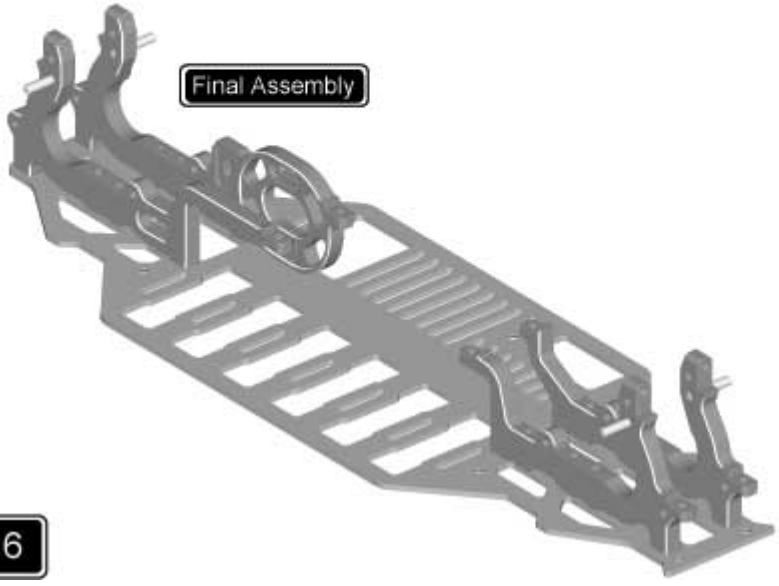

www.racing-cars.com

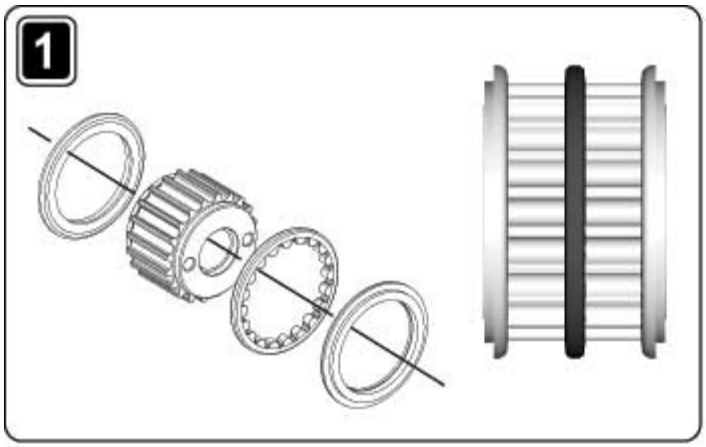

BAG 2

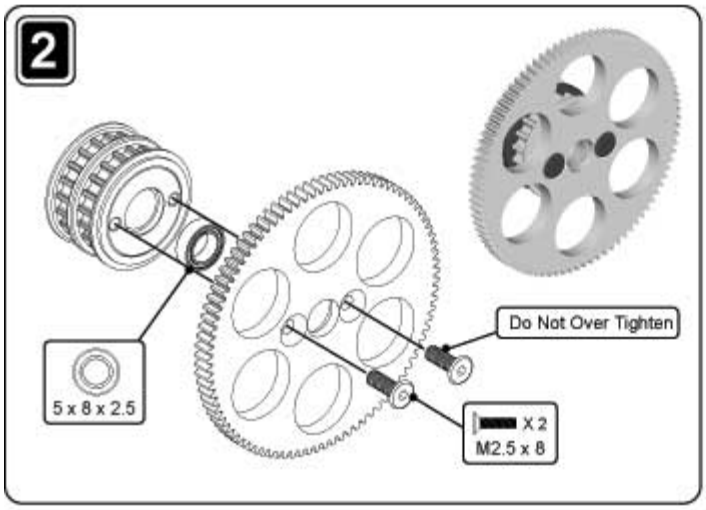

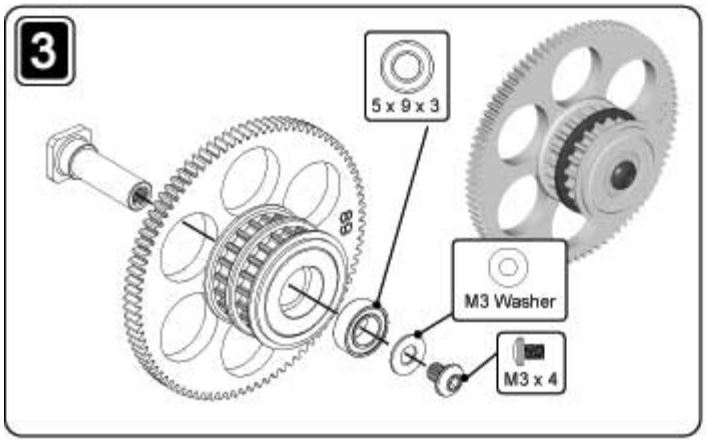



BAG 2 cont..

4

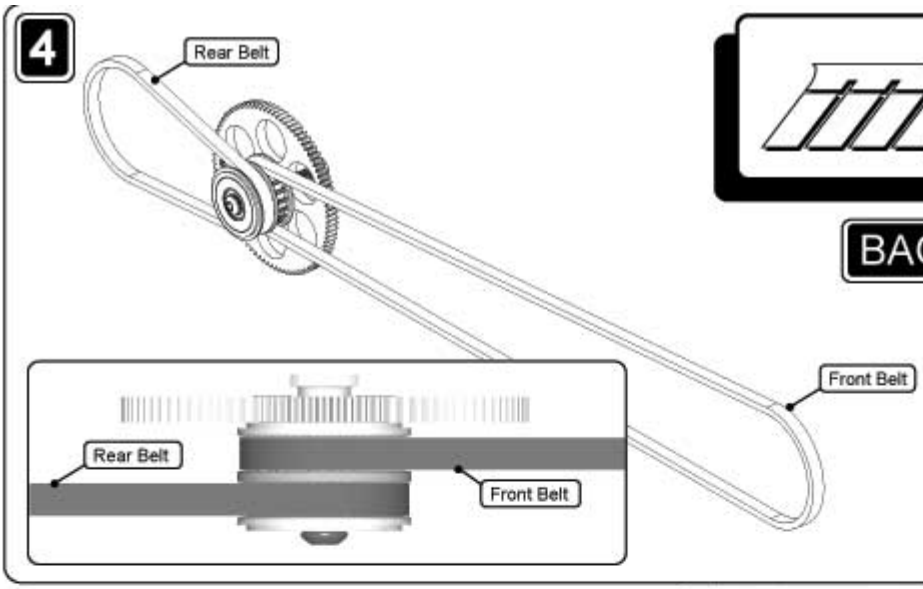

5

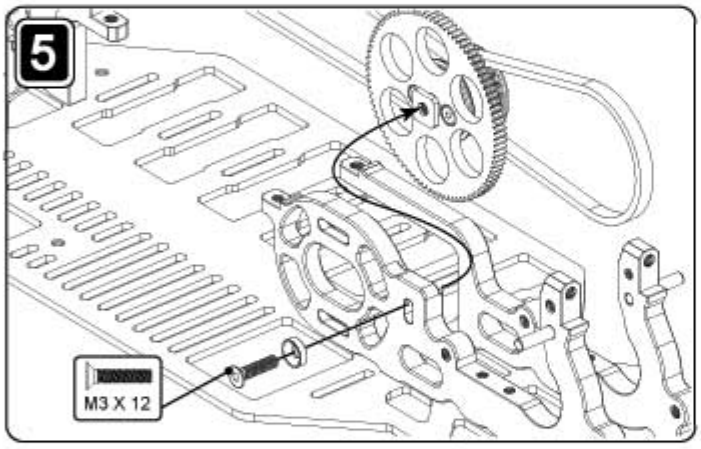

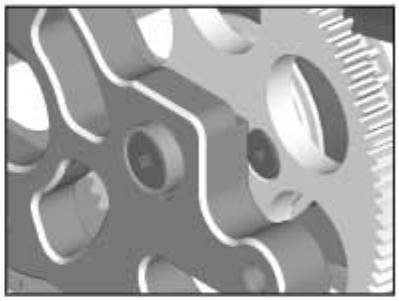

SPUR GEAR HEIGHT

The height of the spur gear may be adjusted depending on the size of gear you are using, it should be set so that the gear is just above the bottom of the chassis.

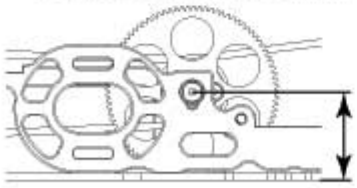

Final Assembly

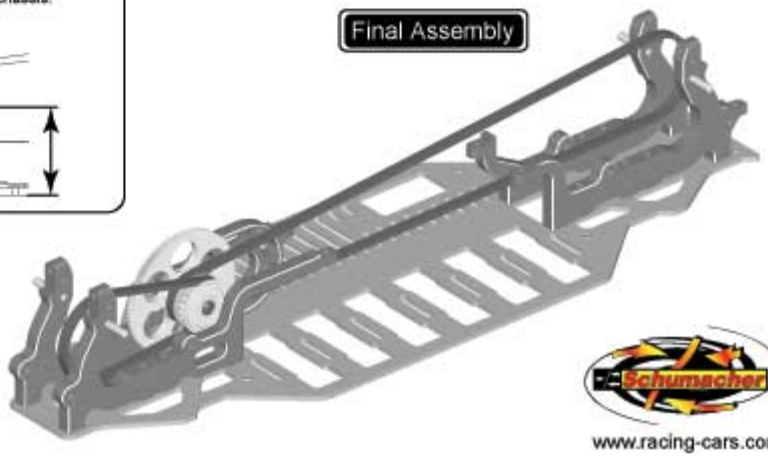

www.racing-cars.com

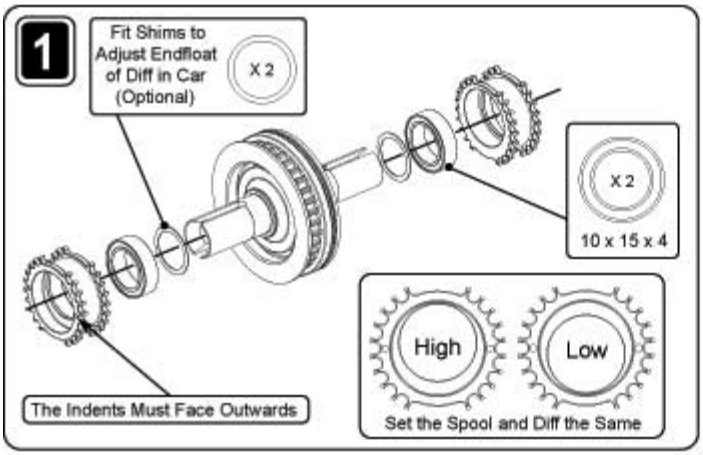



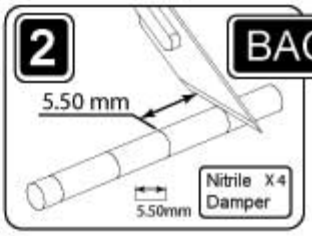

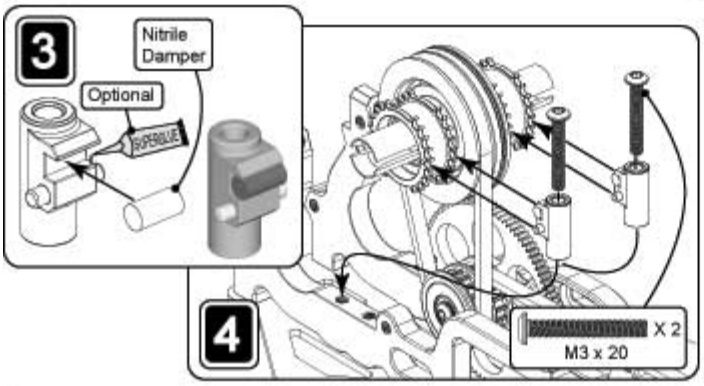

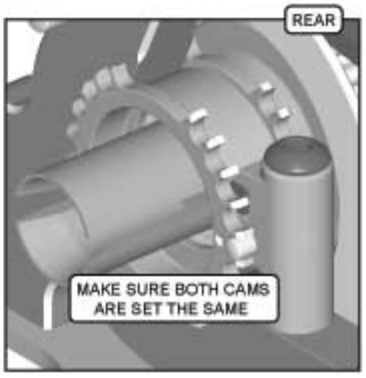

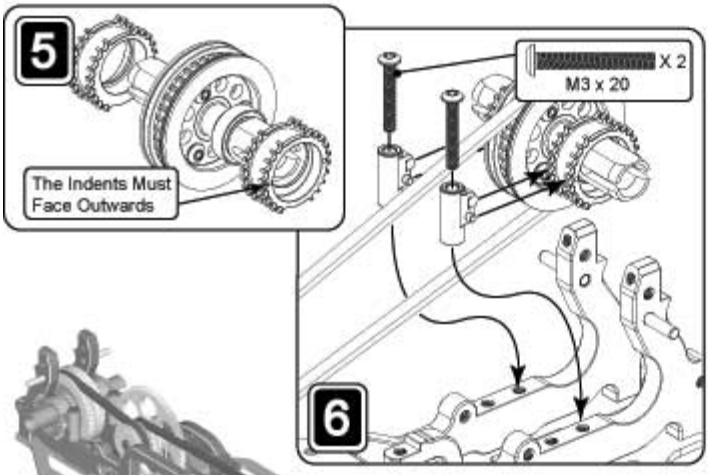

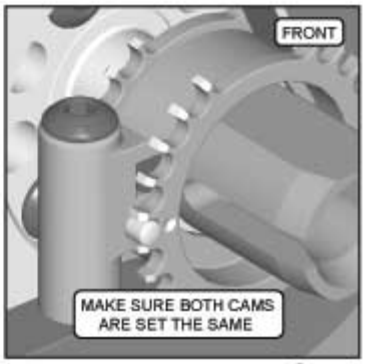

Final Assembly

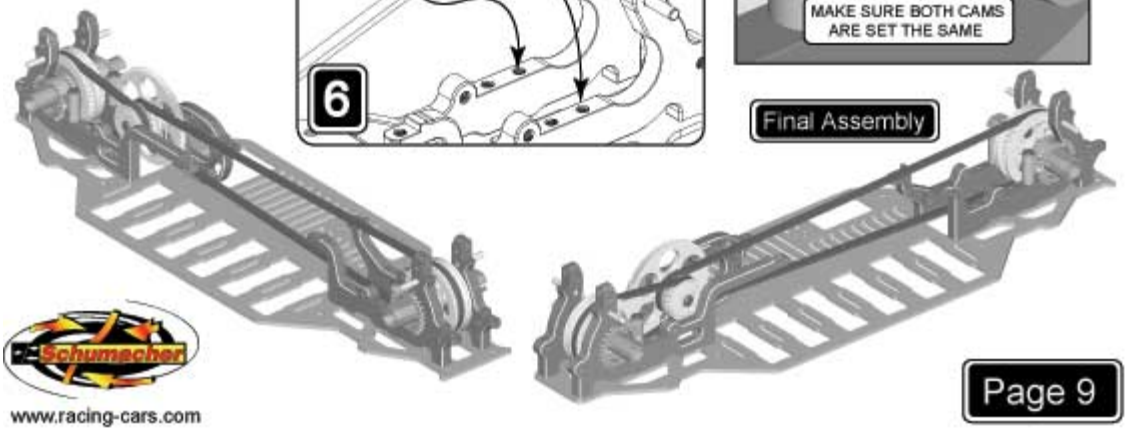

www.racing-cars.com

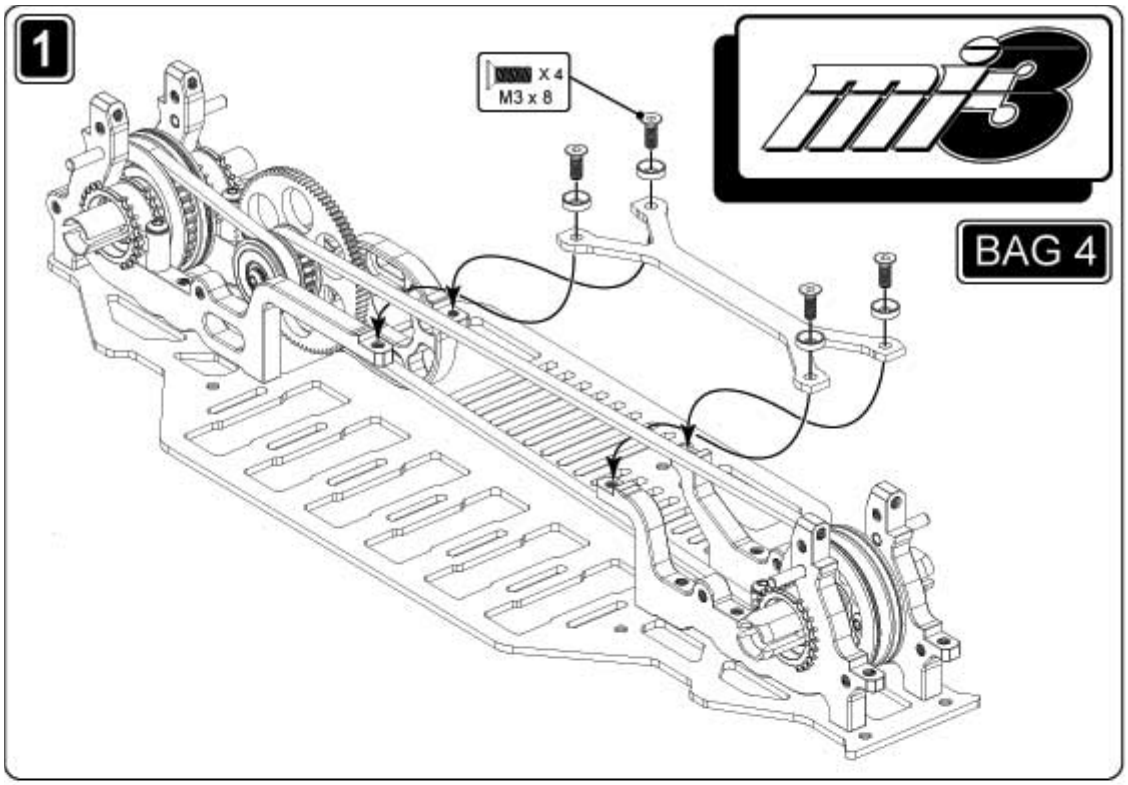

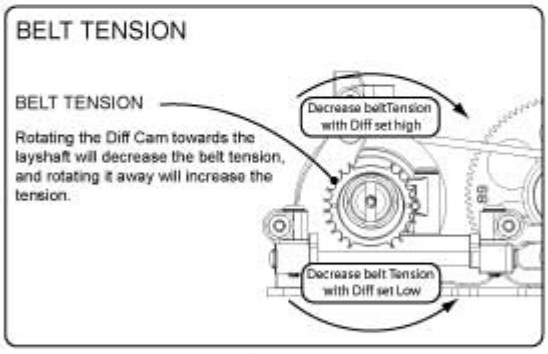

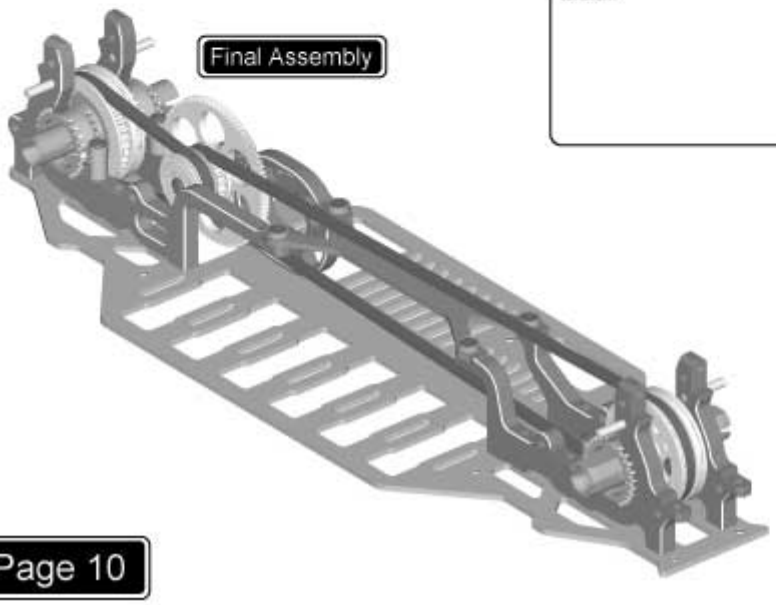

www.racing-cars.com

Rear Suspension Right hand Side

BAG 5

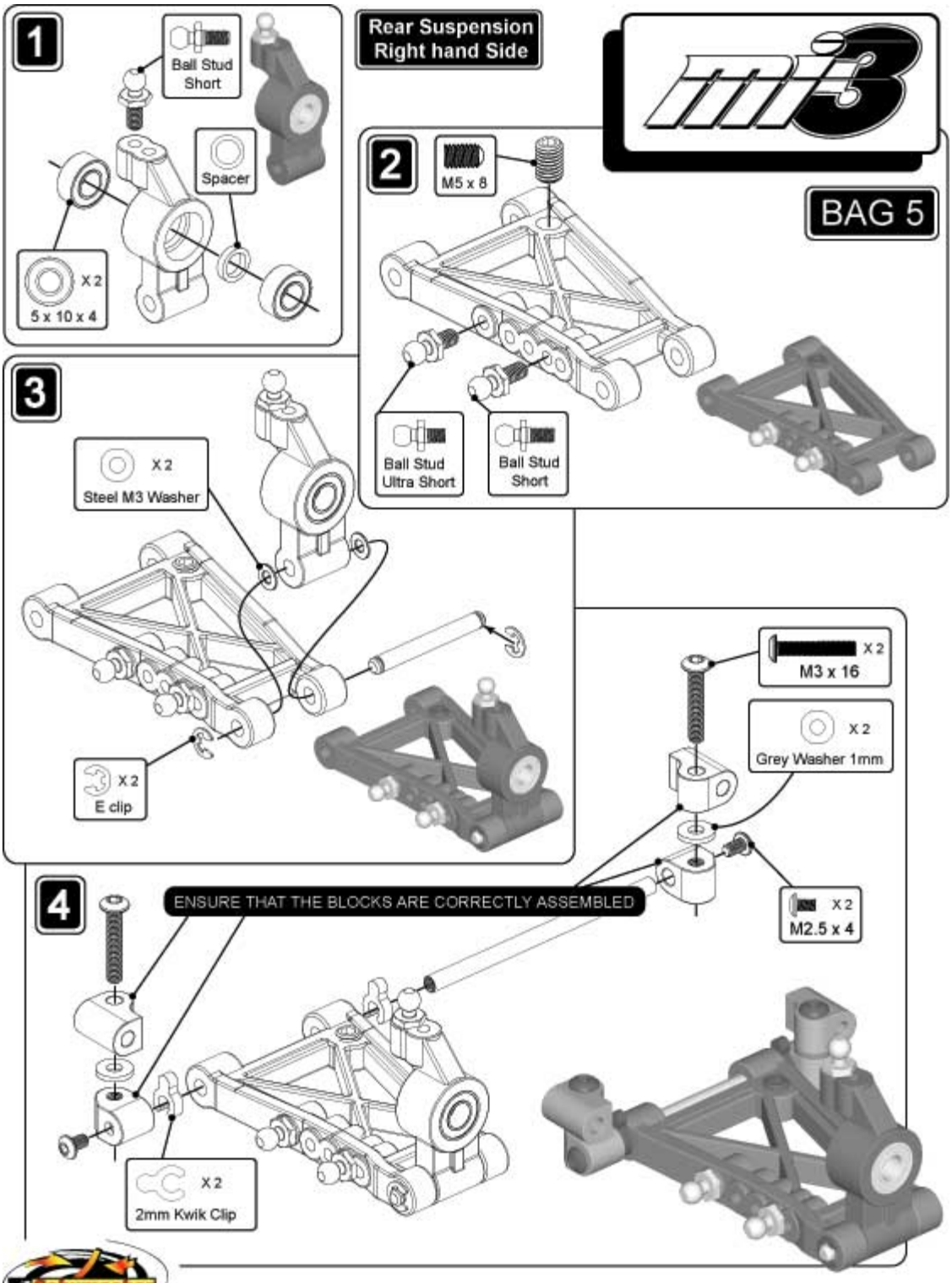

Rear Suspension Left hand Side

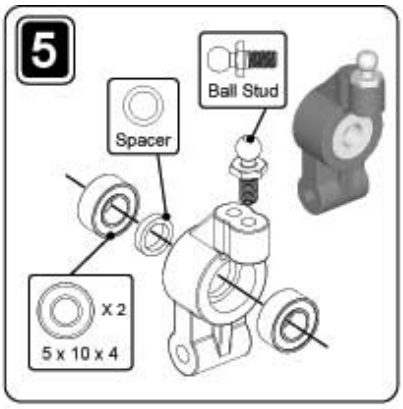

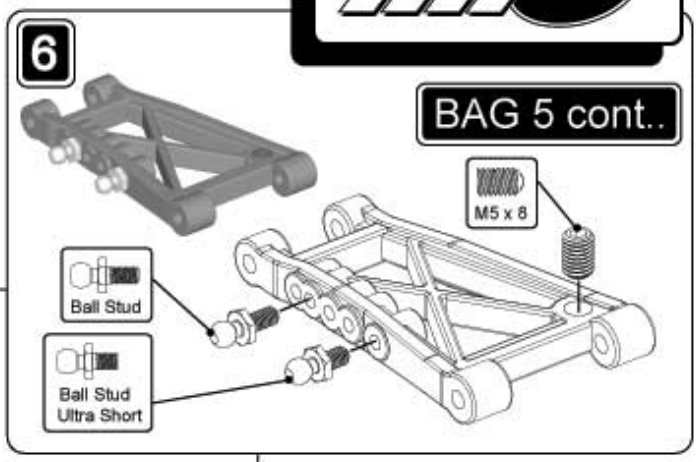

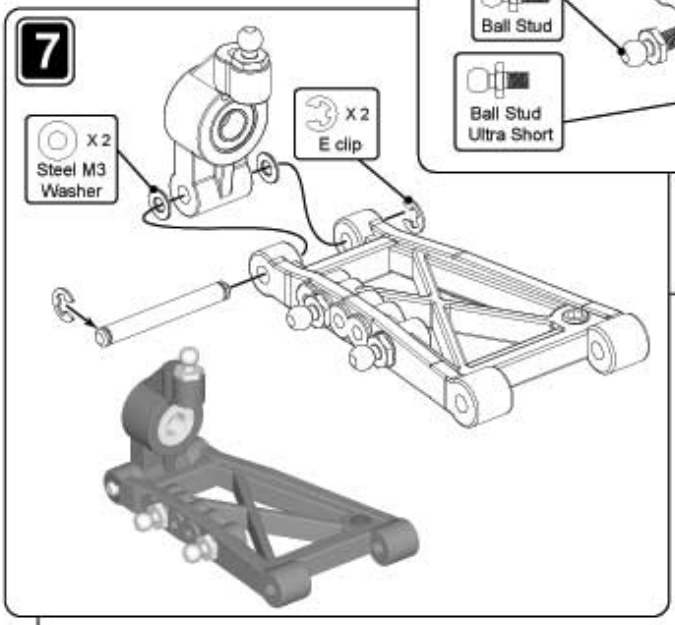

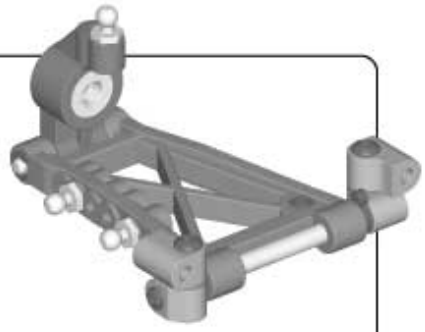

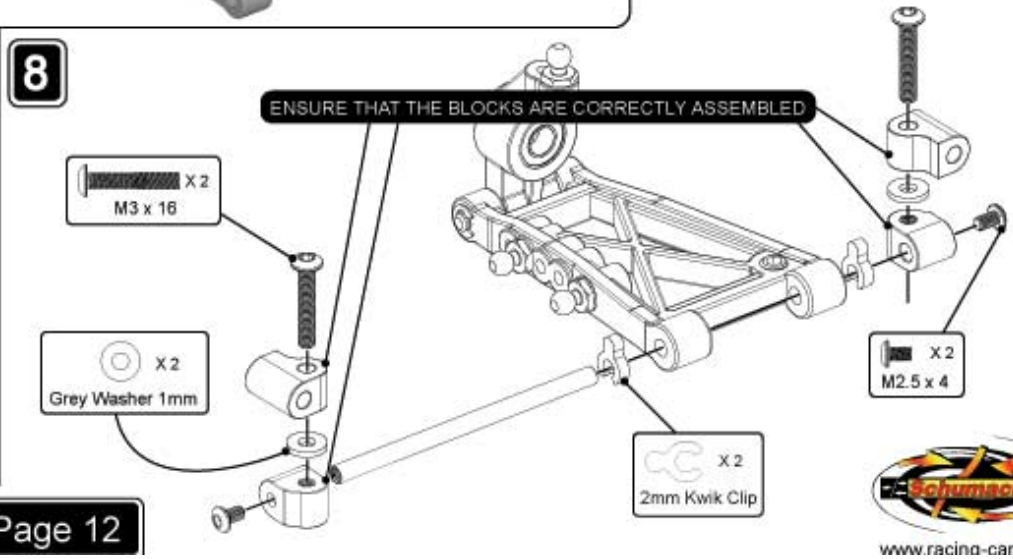

www.racing-cars.com

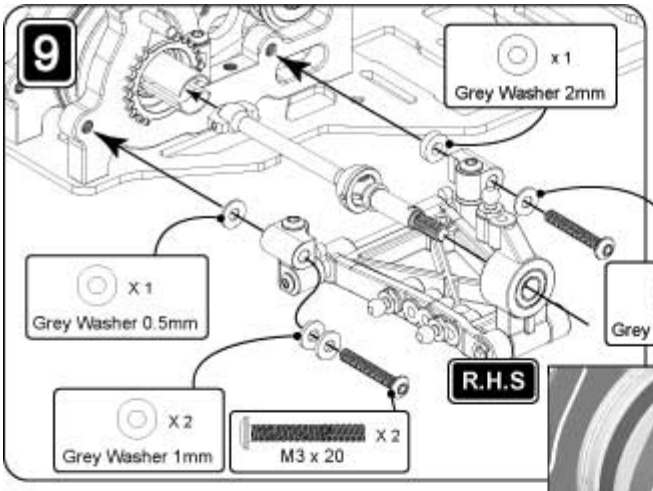

BAG 5 cont..

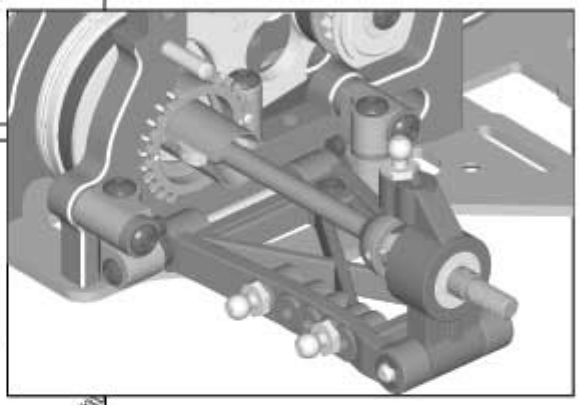

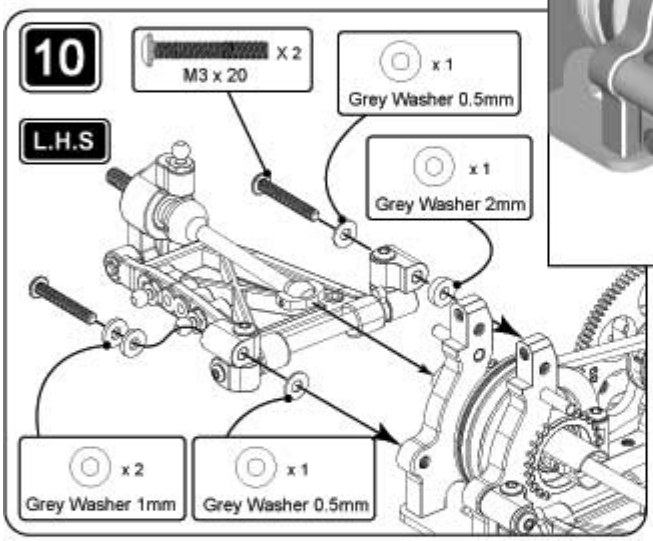

Final Assembly

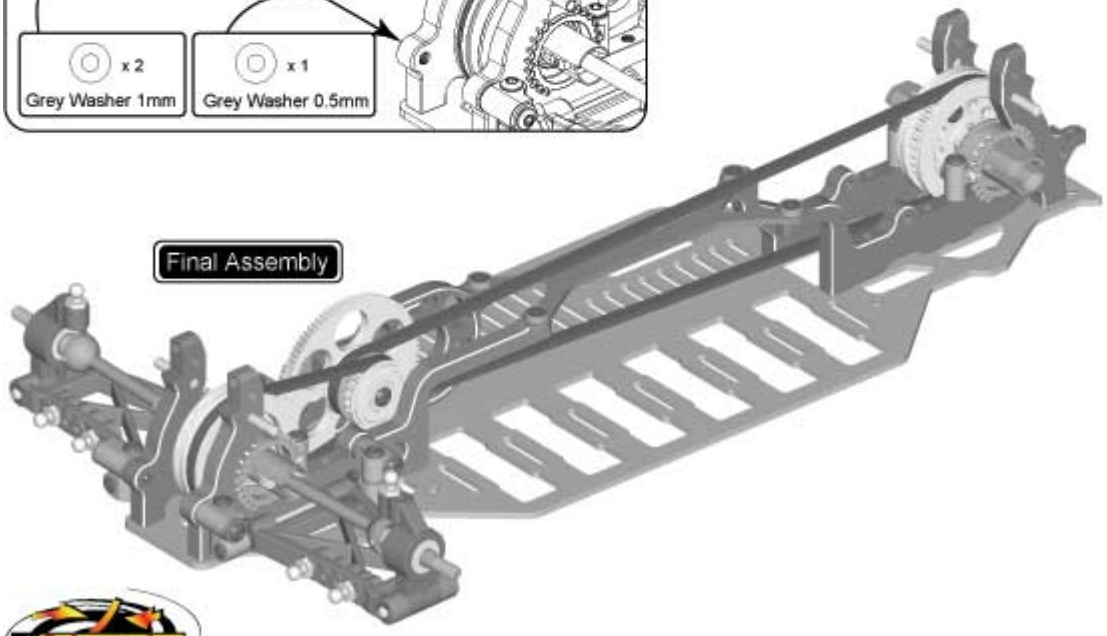

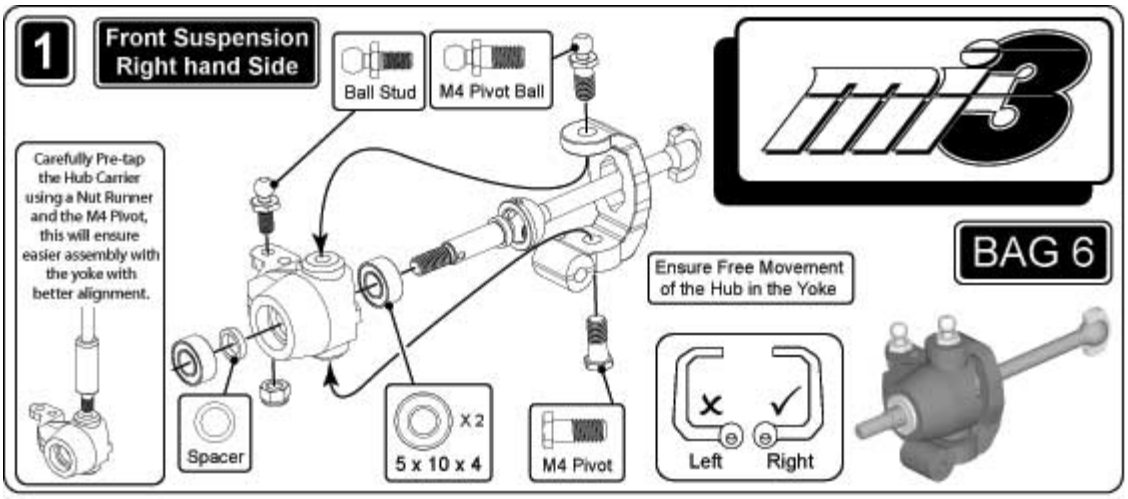

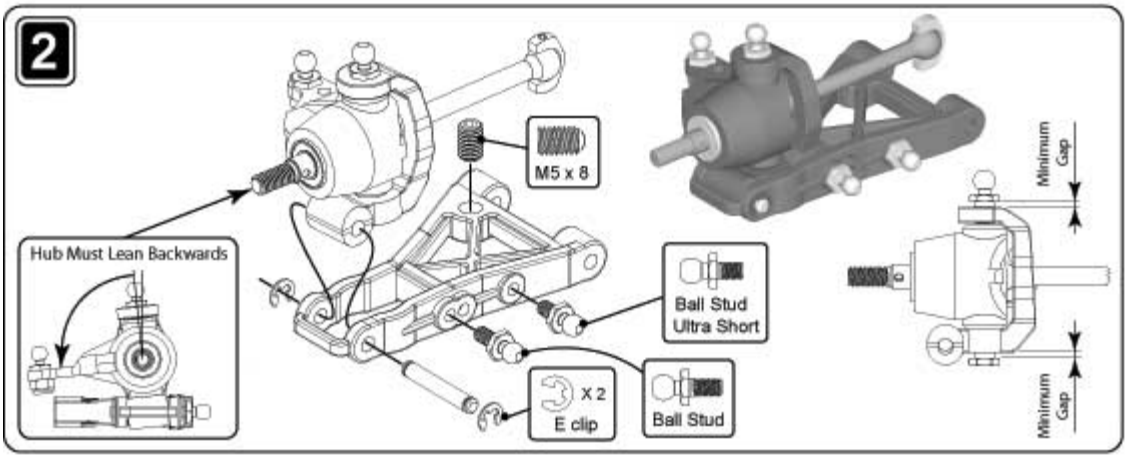

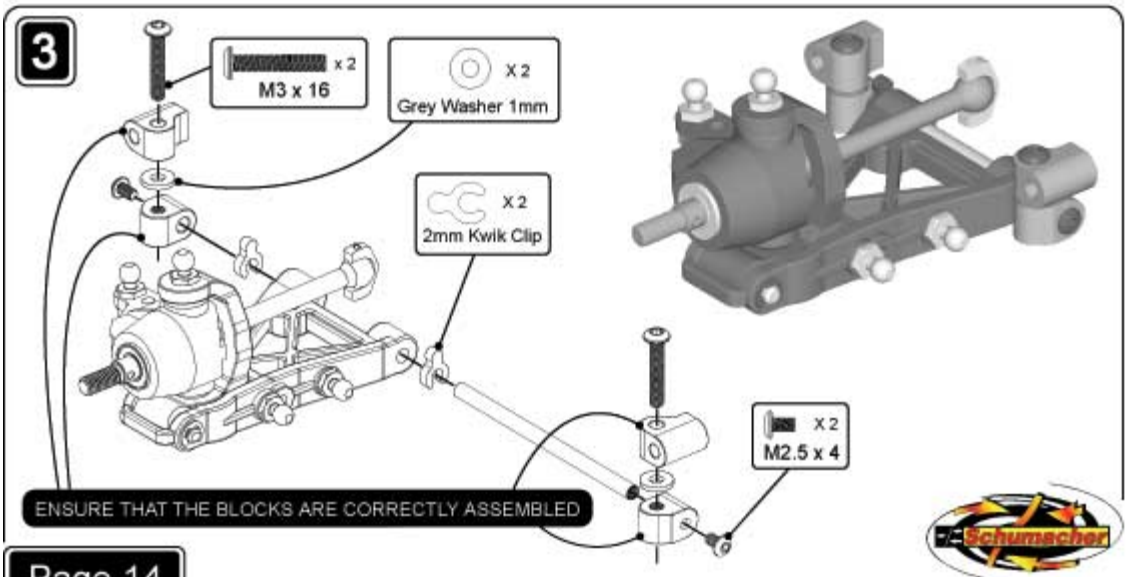

www.racing-cars.com

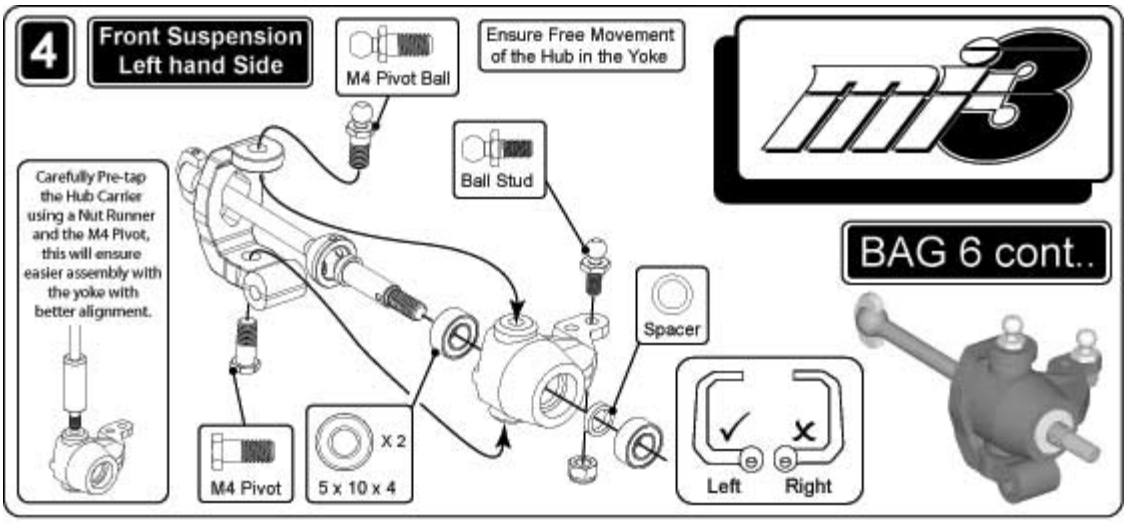
4
Front Suspension
Left hand Side
M4 Pivot Ball
Ensure Free Movement of the Hub in the Yoke
Ball Stud
Carefully Pre-tap the Hub Carrier using a Nut Runner and the M4 Pivot, this will ensure easier assembly with the yoke with better alignment.
Spacer
M4 Pivot
X 2
5 x 10 x 4
Left
Right
BAG 6 cont..

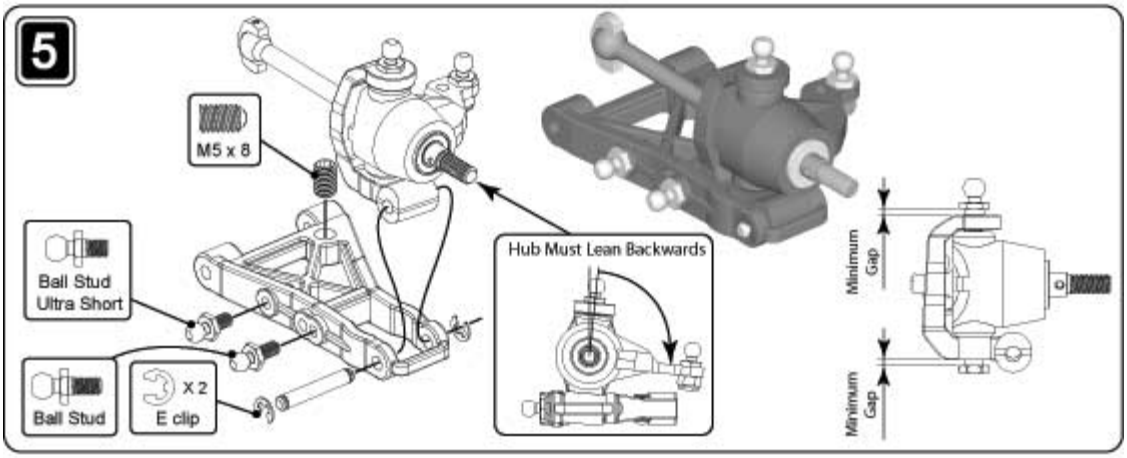
5
M5 x 8
Ball Stud Ultra Short
Ball Stud
X 2
E clip
Hub Must Lean Backwards
Minimum Gap
Minimum Gap

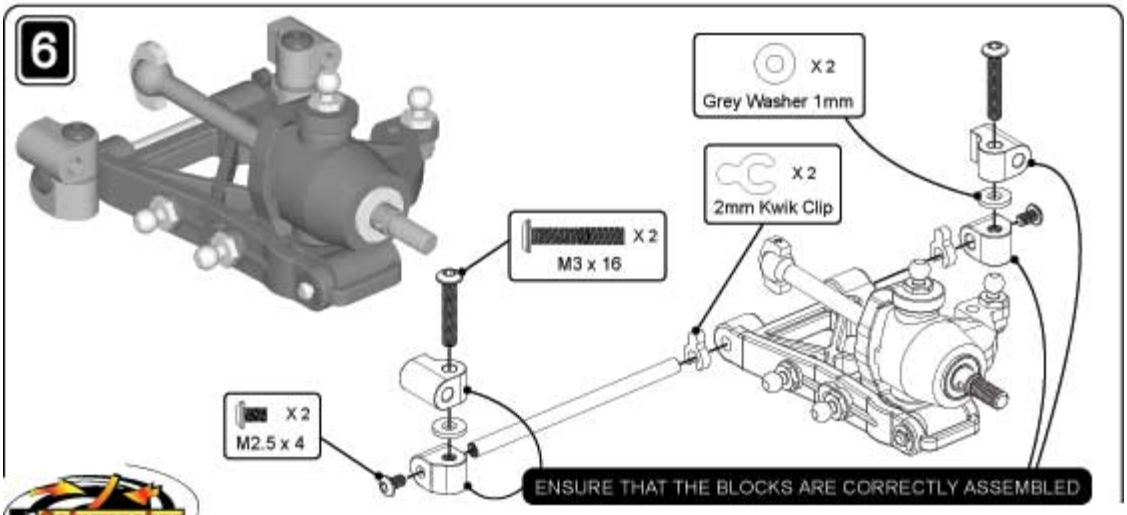
6
X 2
Grey Washer 1mm
X 2
2mm Kwik Clip
X 2
M3 x 16
X 2
M2.5 x 4
ENSURE THAT THE BLOCKS ARE CORRECTLY ASSEMBLED

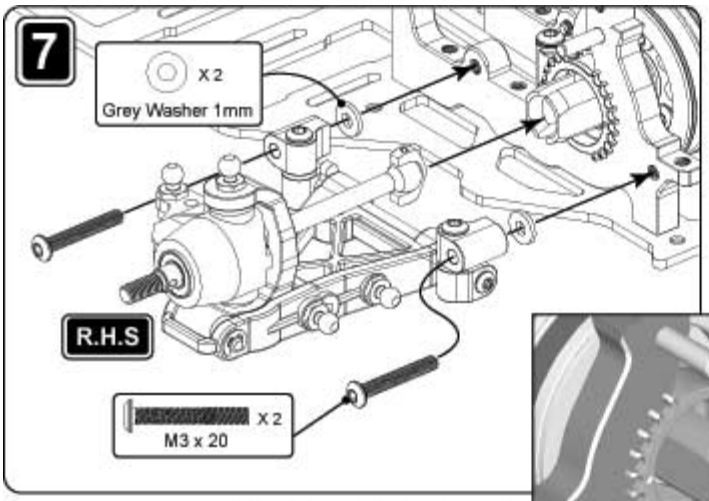

m3

BAG 6 cont...

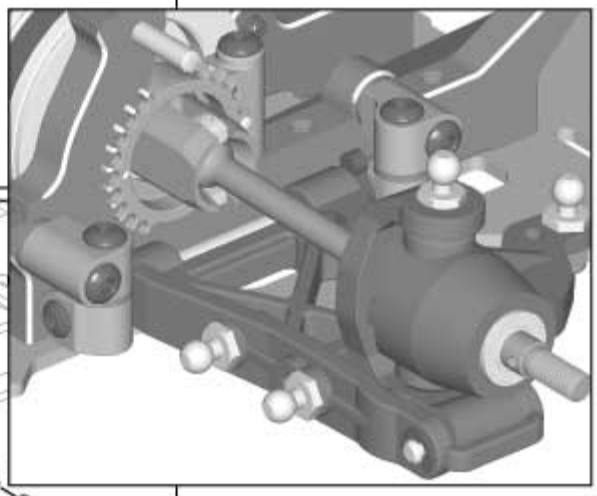

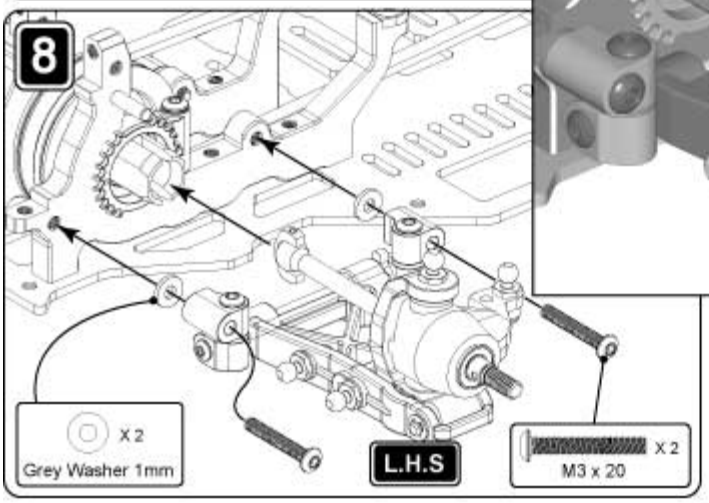

Final Assembly

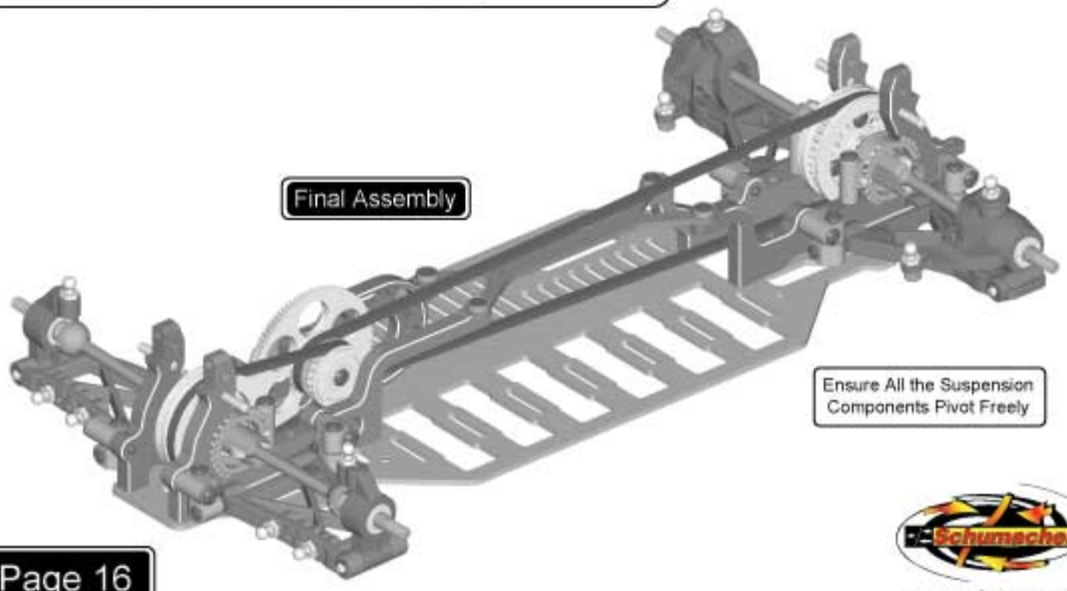

Ensure All the Suspension Components Pivot Freely

Schumacher

www.racing-cars.com

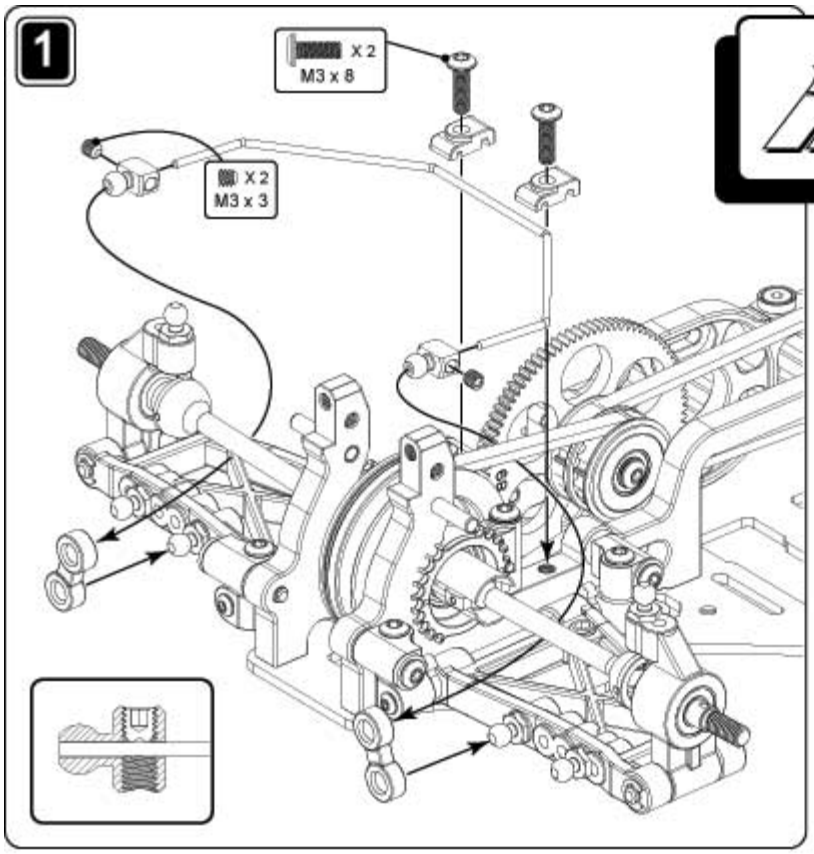

Bag 7



Rear Roll Bar
Full Size

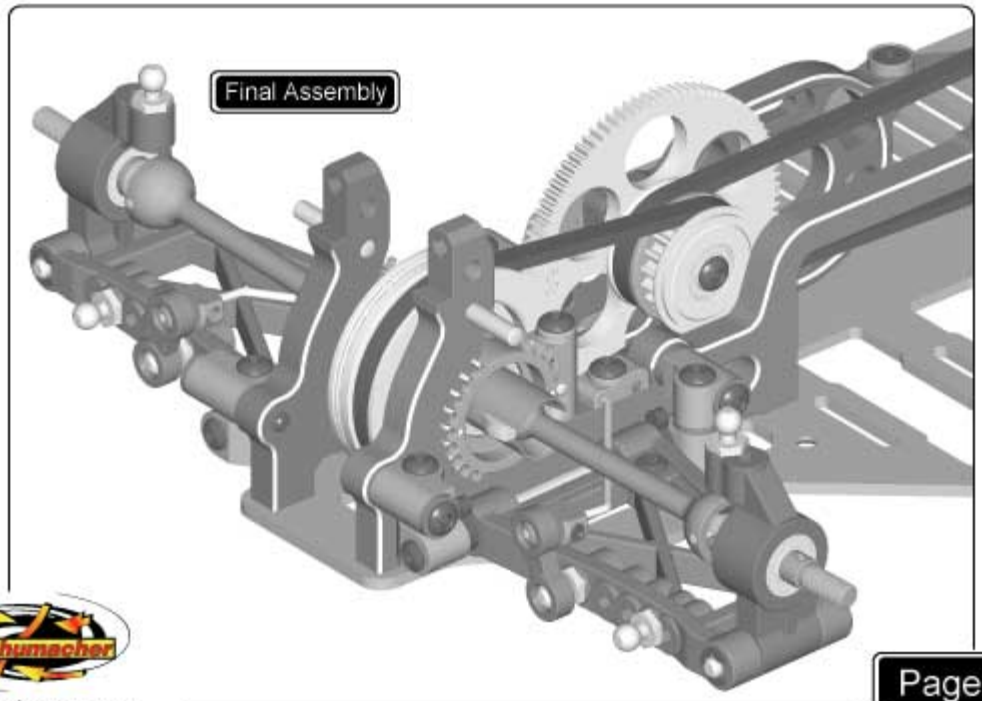

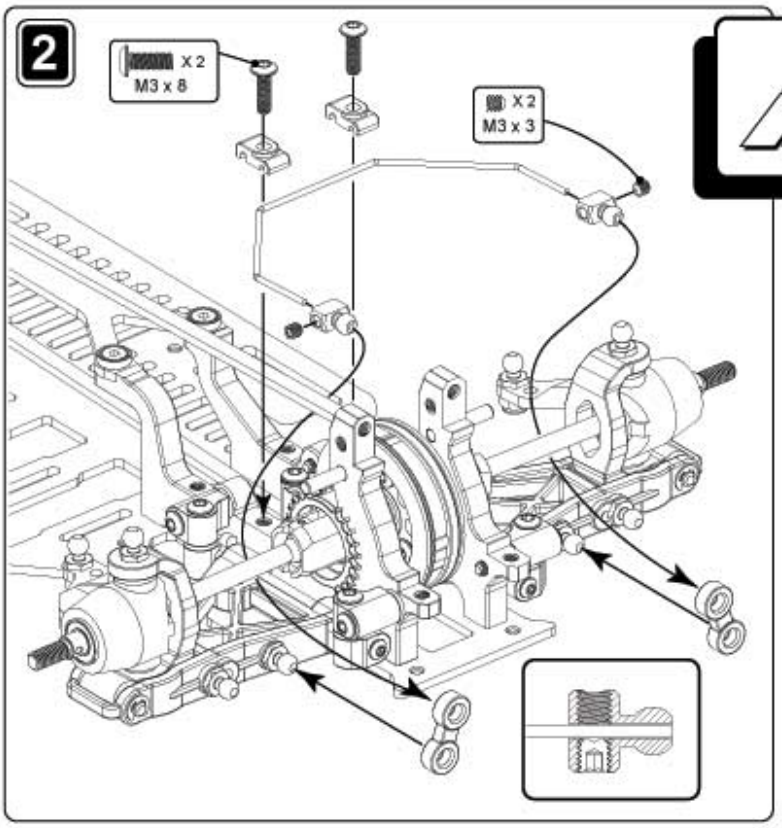

m3

Bag 7 cont...

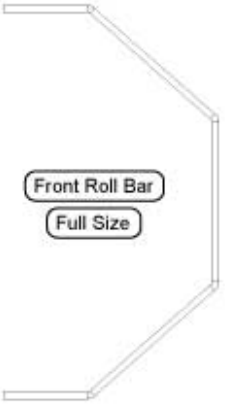

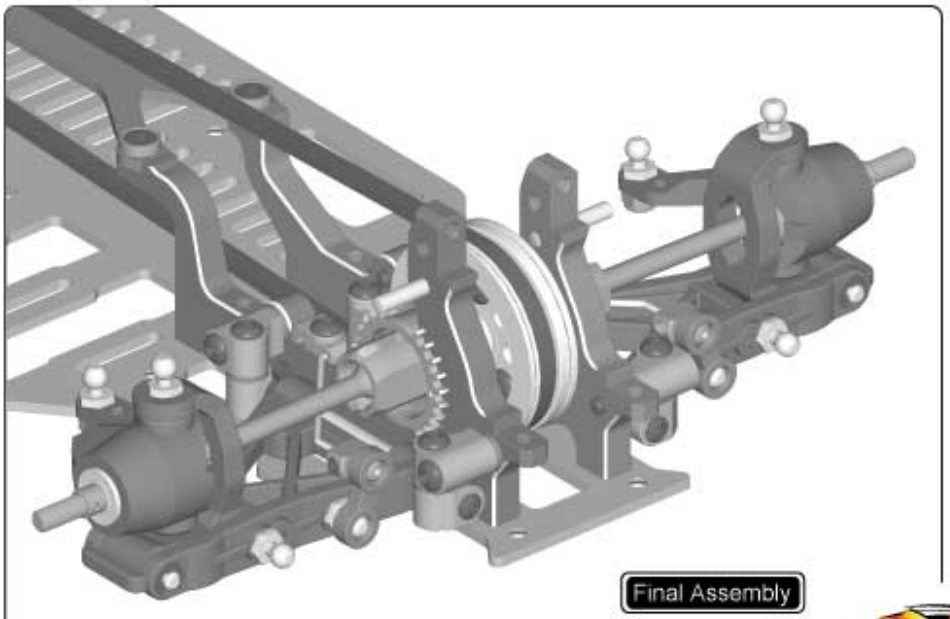

Final Assembly

Schumacher
www.racing-cars.com

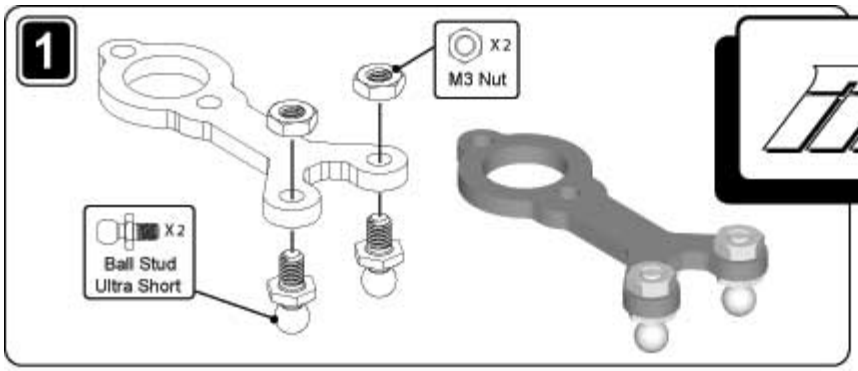
1
X 2
M3 Nut
X 2
Ball Stud
Ultra Short

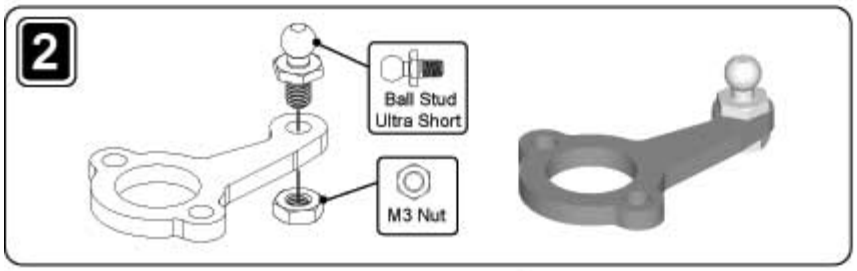
2
Ball Stud
Ultra Short
M3 Nut

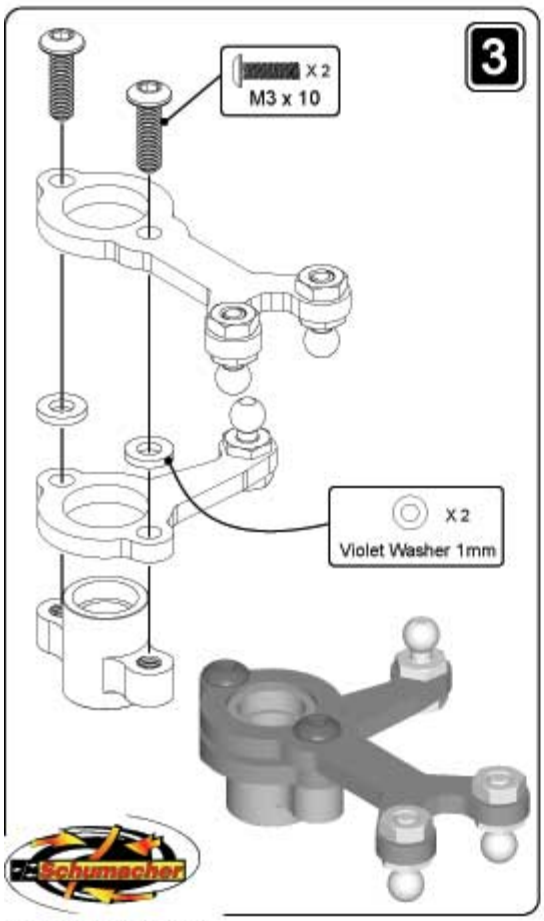
3
X 2
M3 x 10
X 2
Violet Washer 1mm

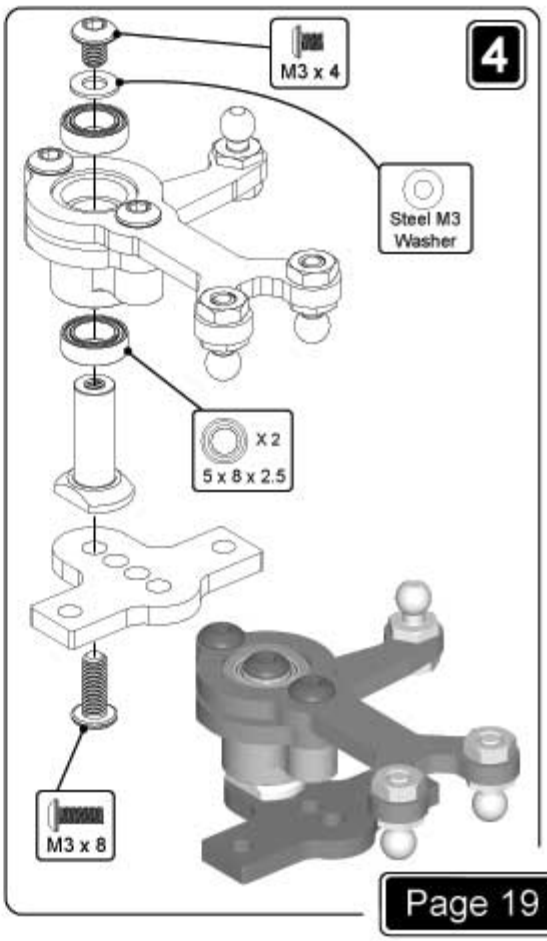
4
M3 x 4
Steel M3
Washer
X 2
5 x 8 x 2.5
M3 x 8

5

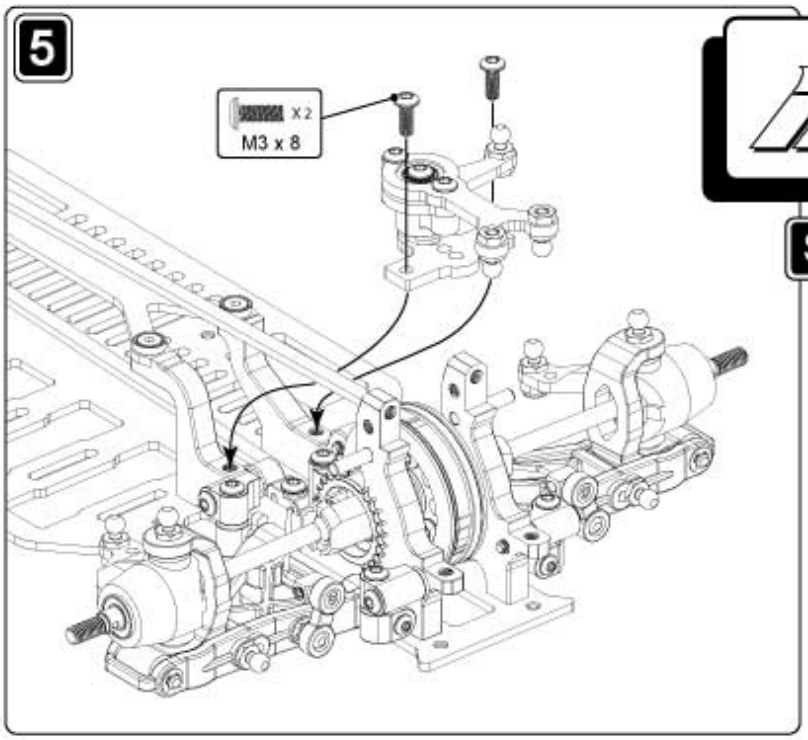

Steering cont...

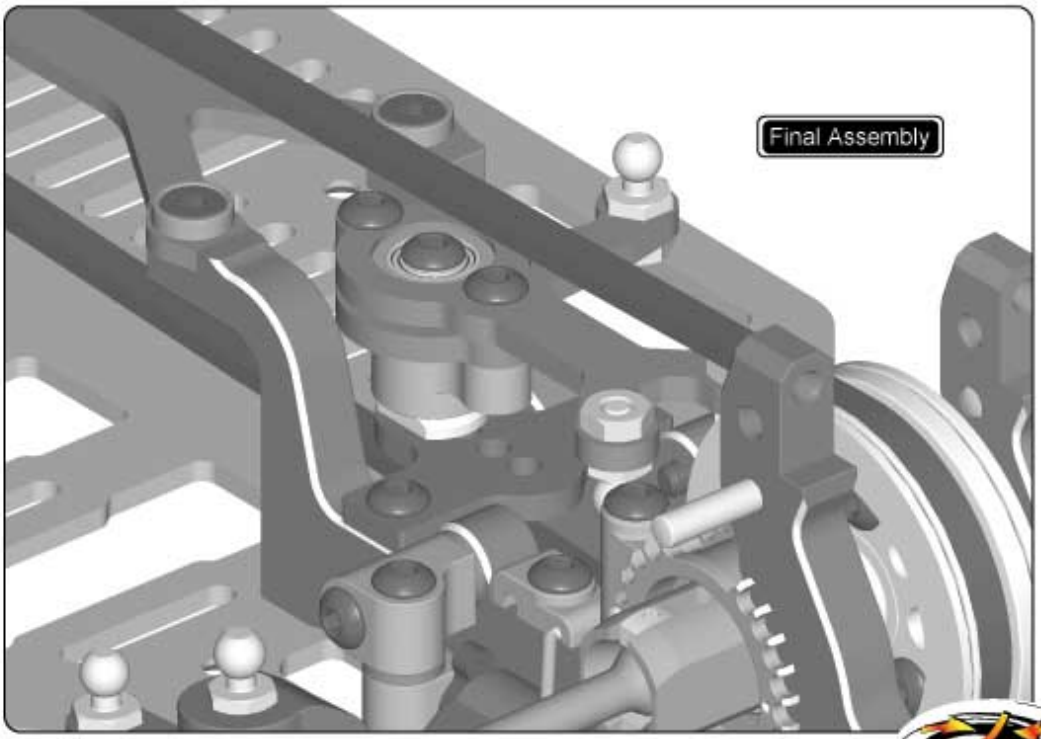

www.racing-cars.com

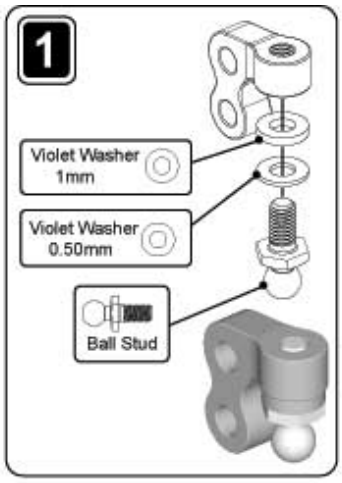
1
Violet Washer
1mm
Violet Washer
0.50mm
Ball Stud

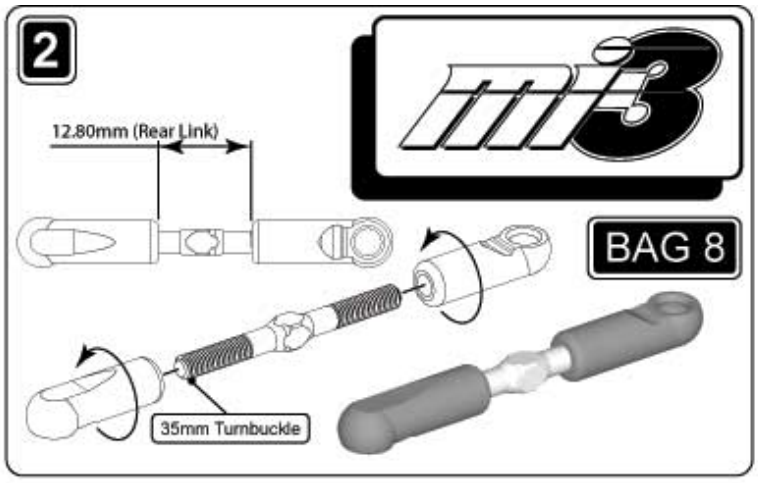
2
12.80mm (Rear Link)
BAG 8
35mm Turnbuckle

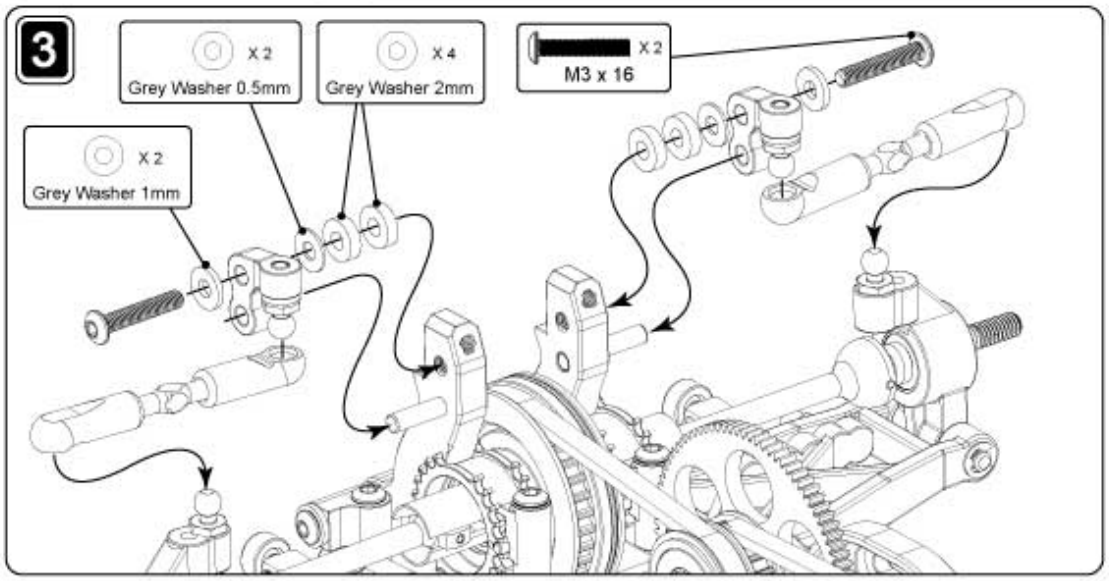
3
X 2
Grey Washer 0.5mm
X 4
Grey Washer 2mm
X 2
M3 x 16
X 2
Grey Washer 1mm

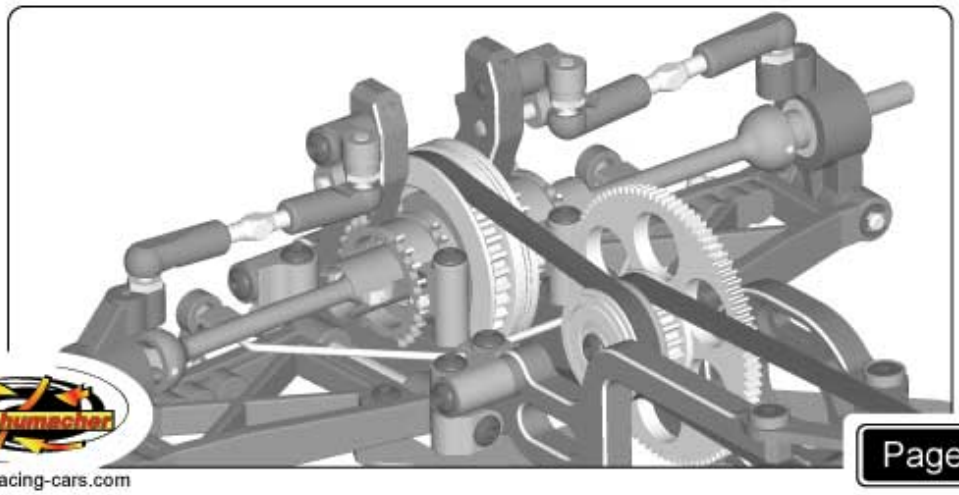

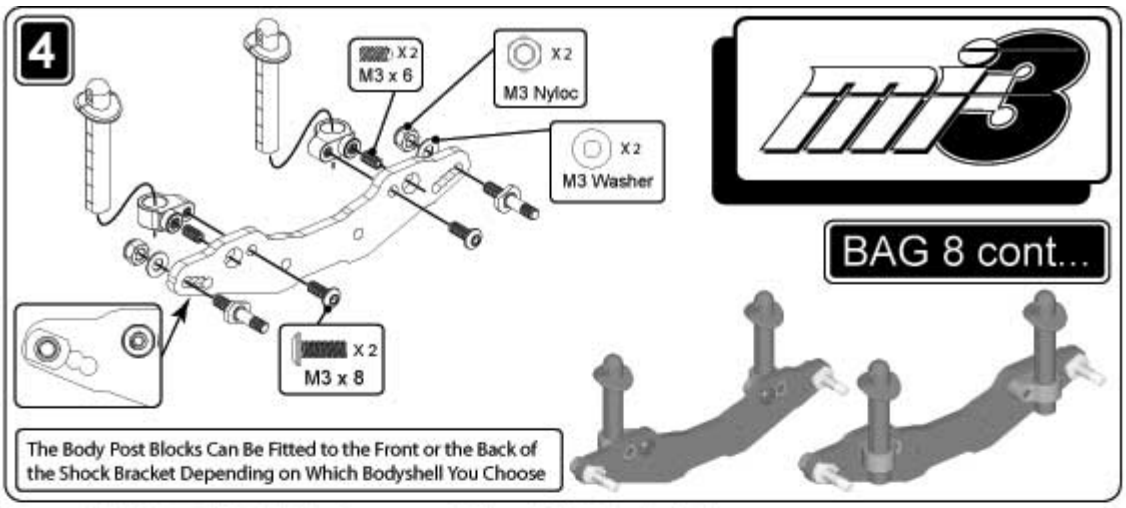

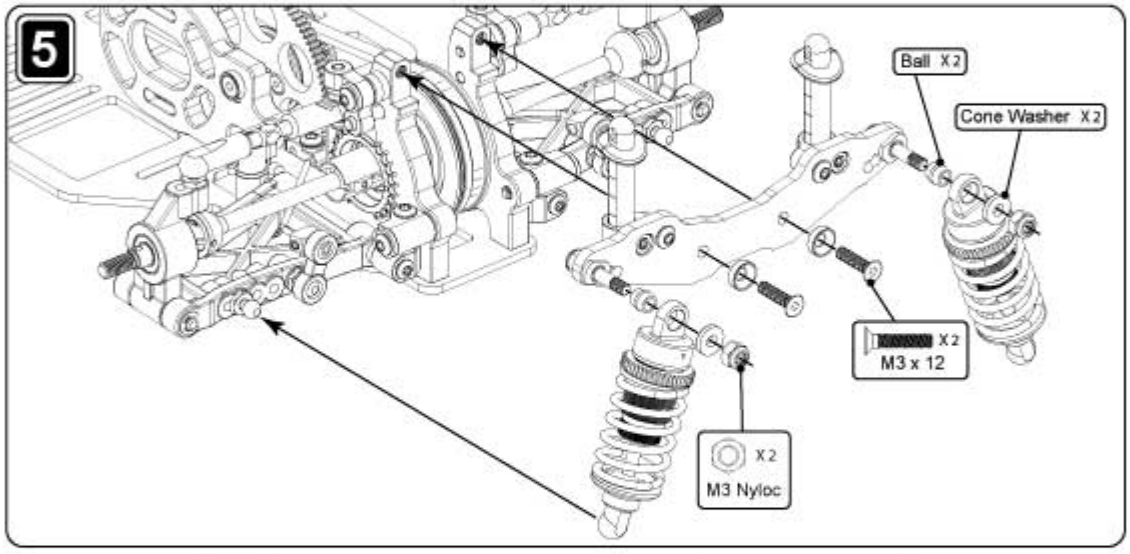

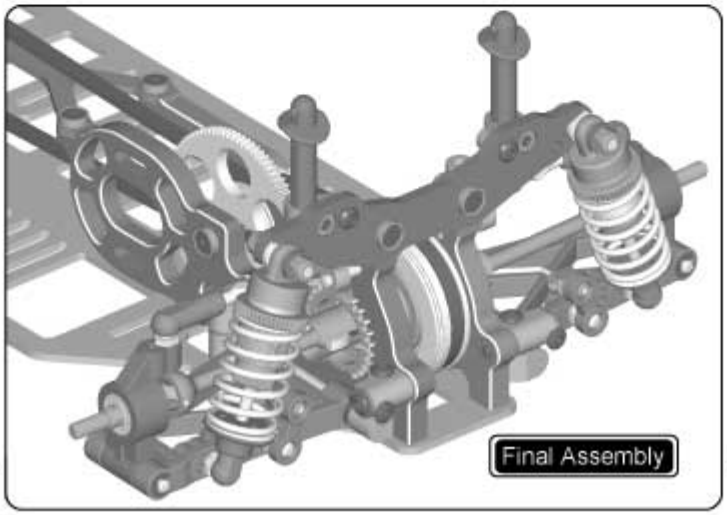

www.racing-cars.com

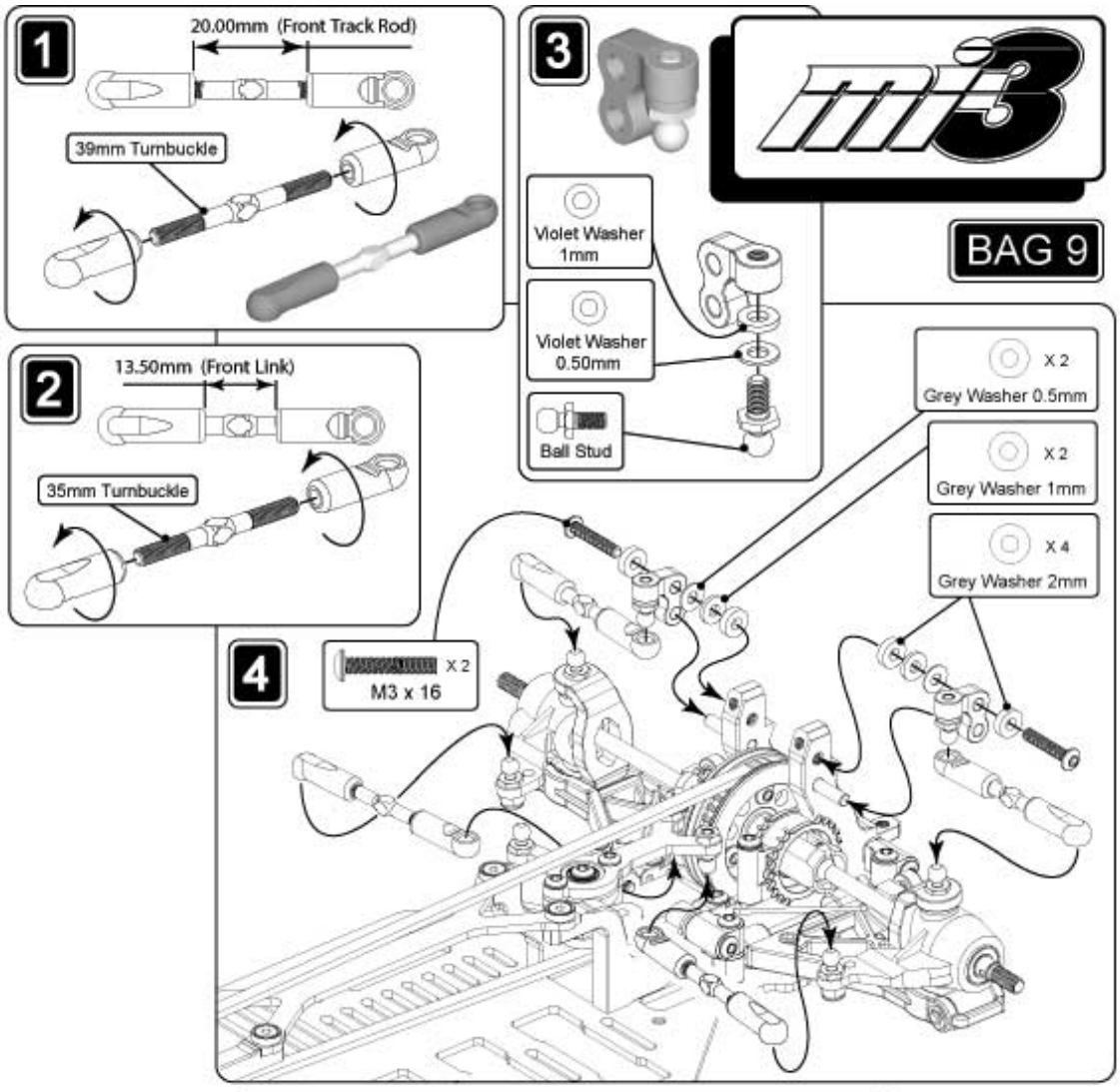
1
20.00mm (Front Track Rod)
39mm Turnbuckle
2
13.50mm (Front Link)
35mm Turnbuckle
3
Violet Washer 1mm
Violet Washer 0.50mm
Ball Stud
BAG 9
X 2
Grey Washer 0.5mm
X 2
Grey Washer 1mm
X 4
Grey Washer 2mm
4
X 2
M3 x 16

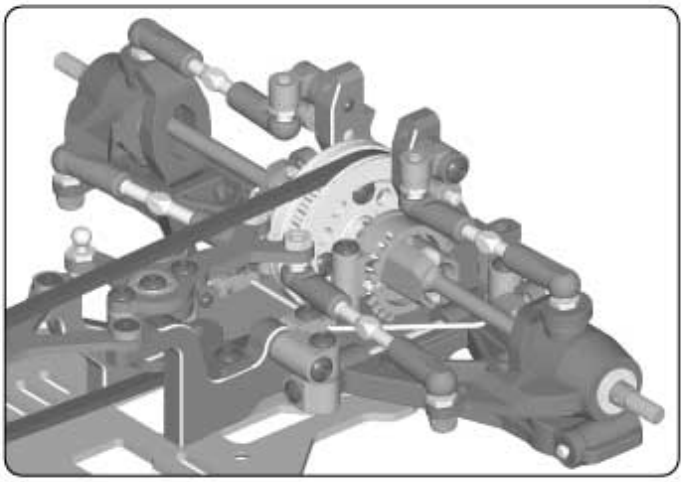

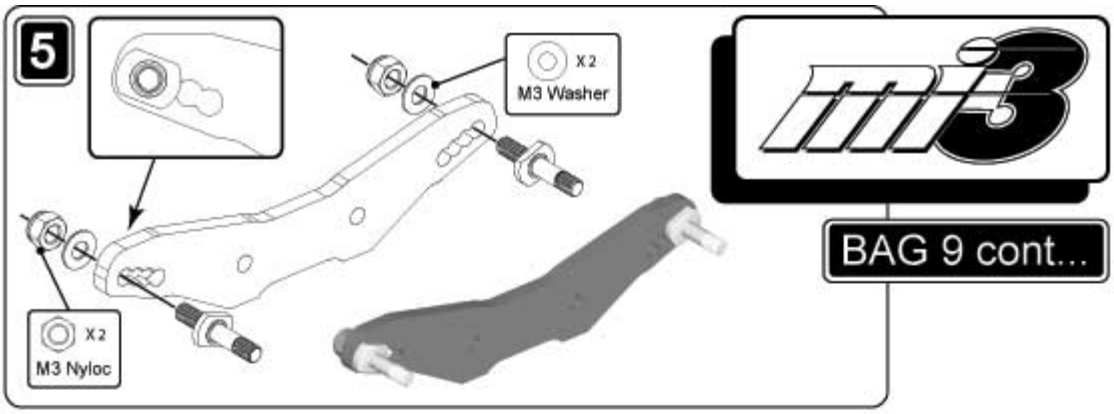

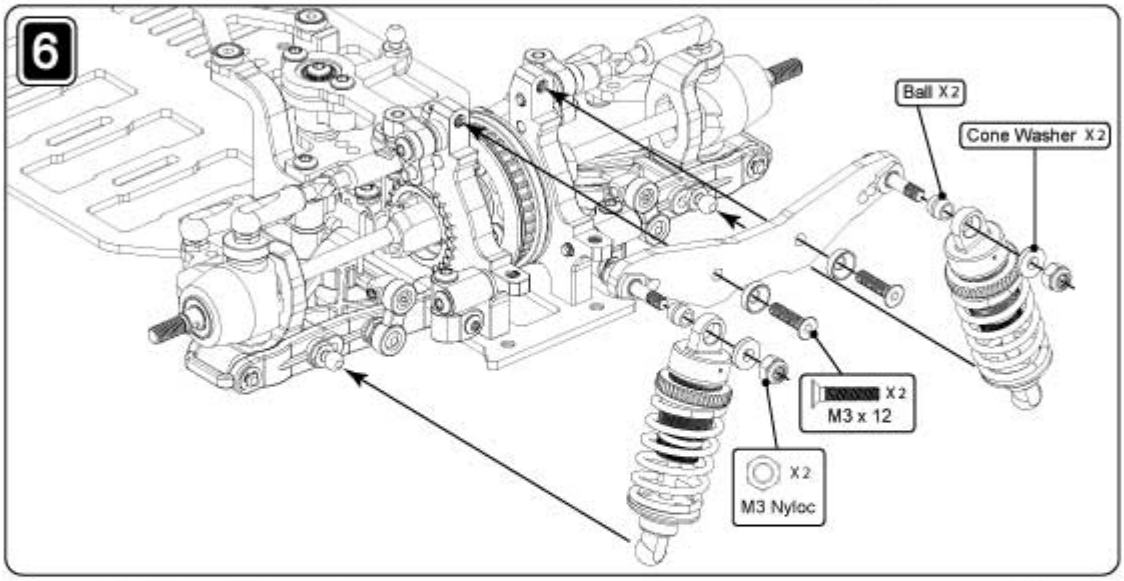

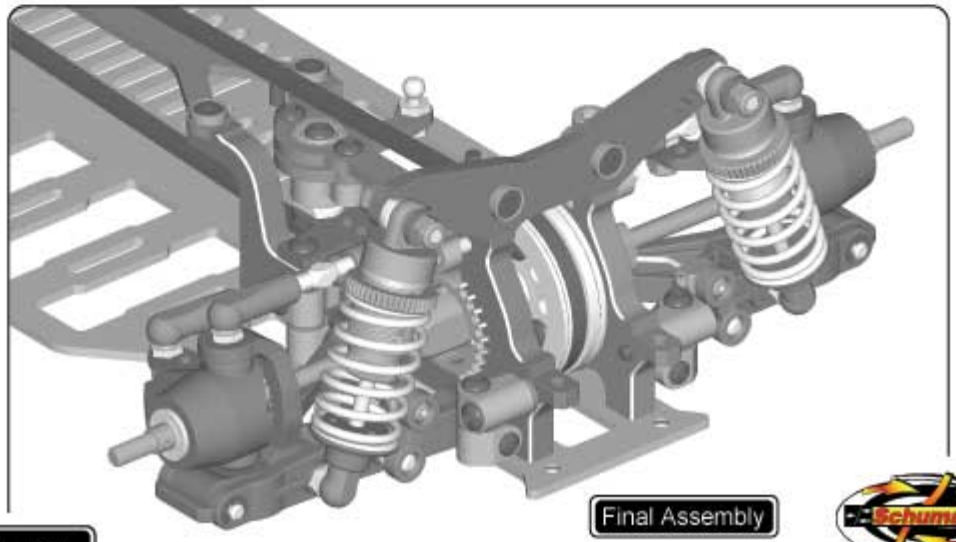

www.racing-cars.com

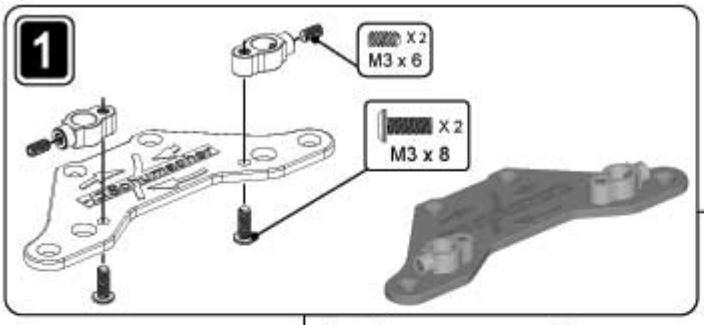



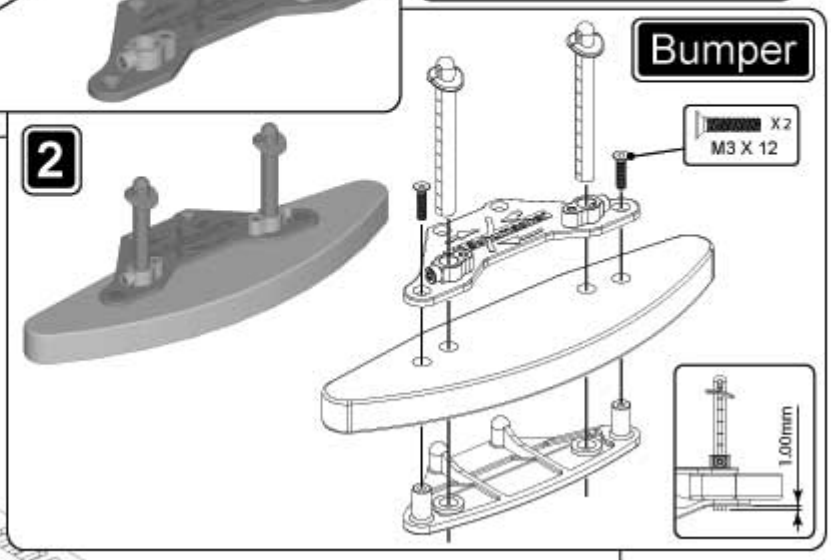

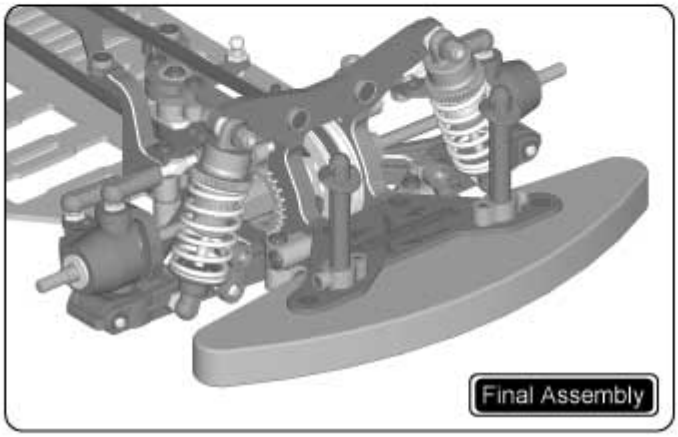



www.racing-cars.com

Radio Installation

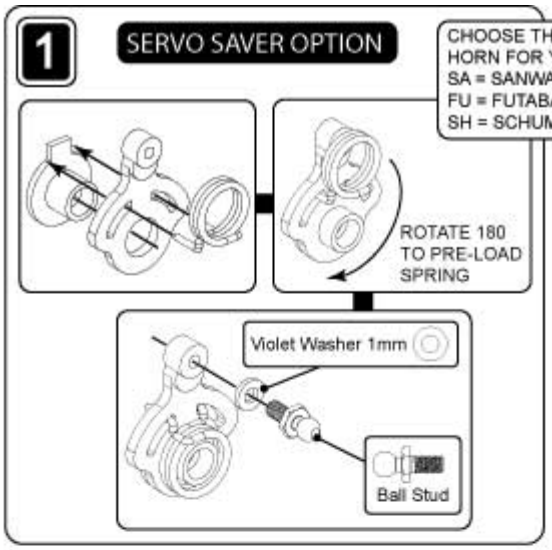

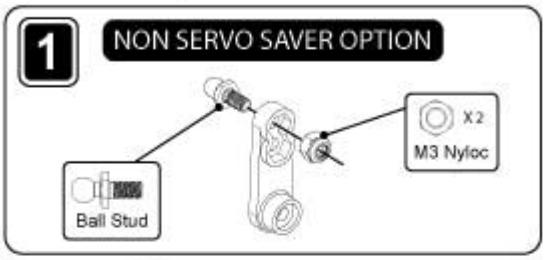

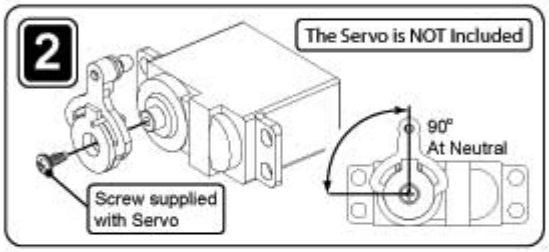

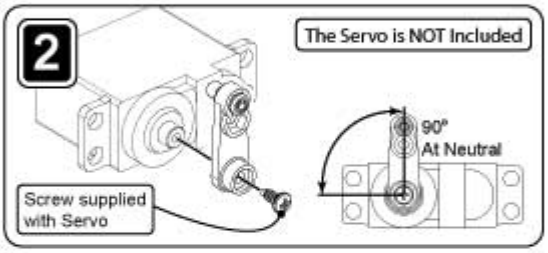

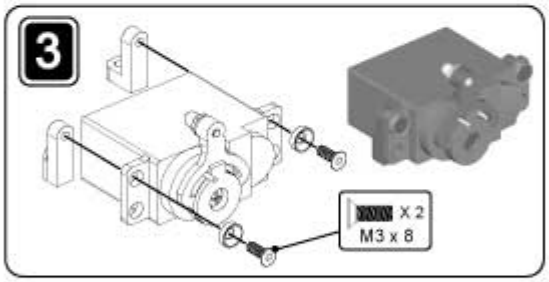

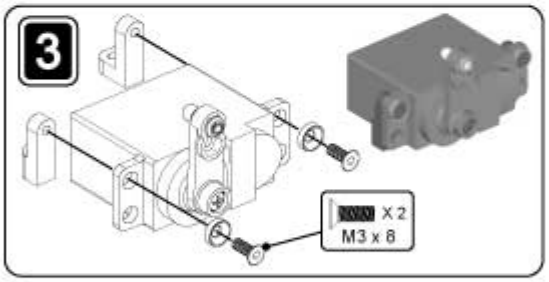

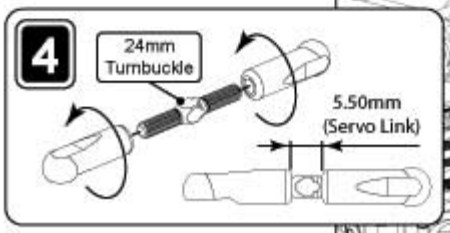

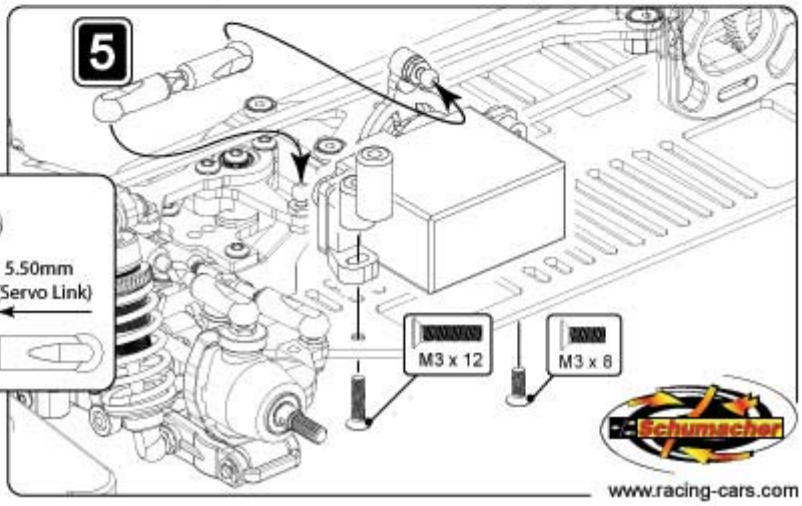

www.racing-cars.com

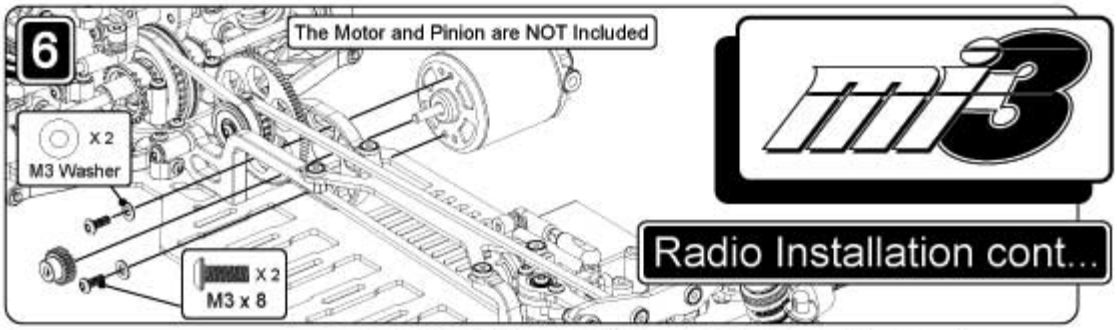

Radio Installation cont...

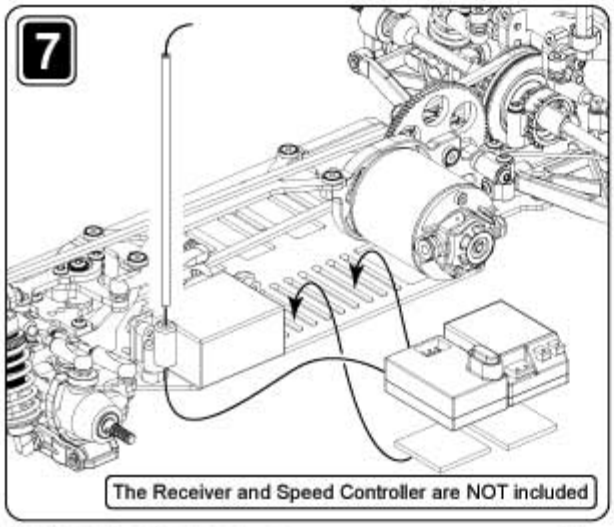

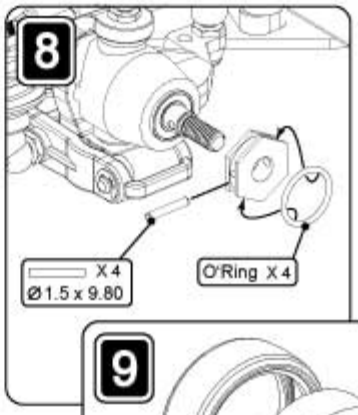

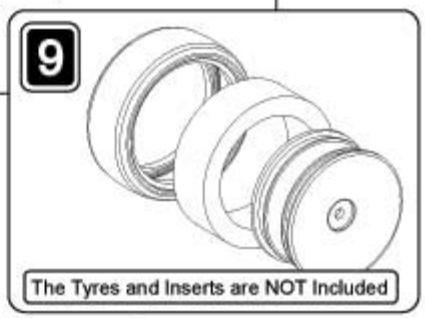



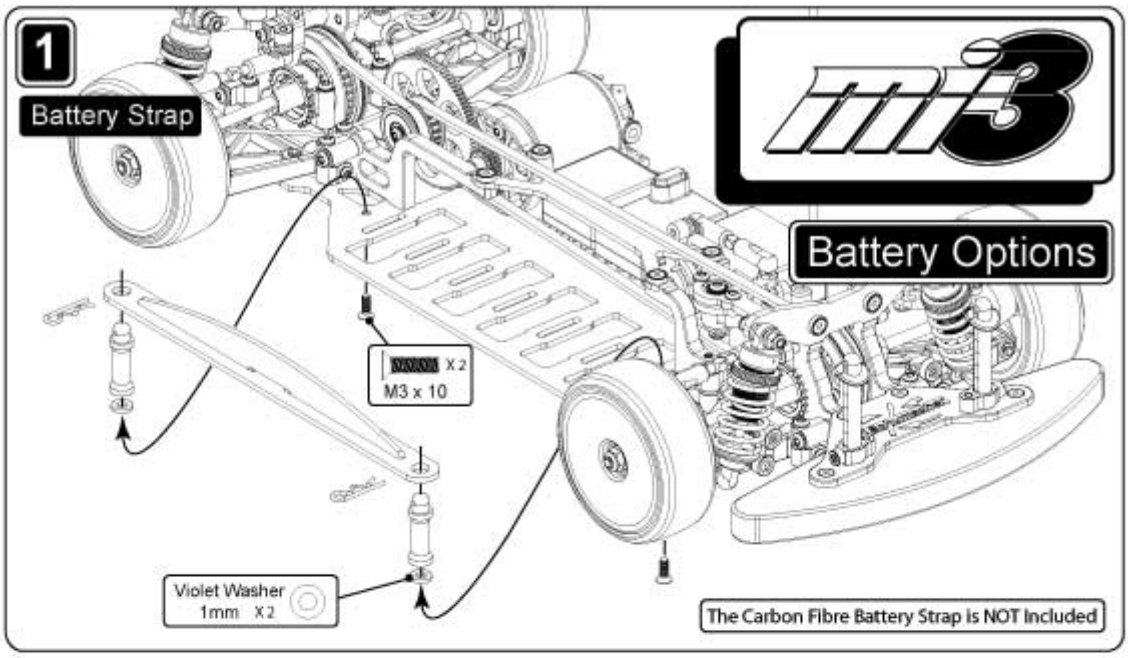

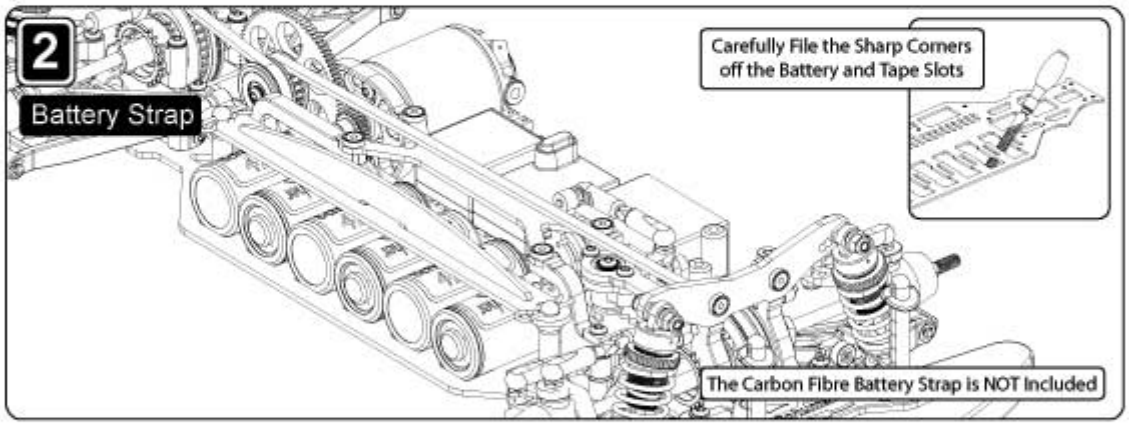

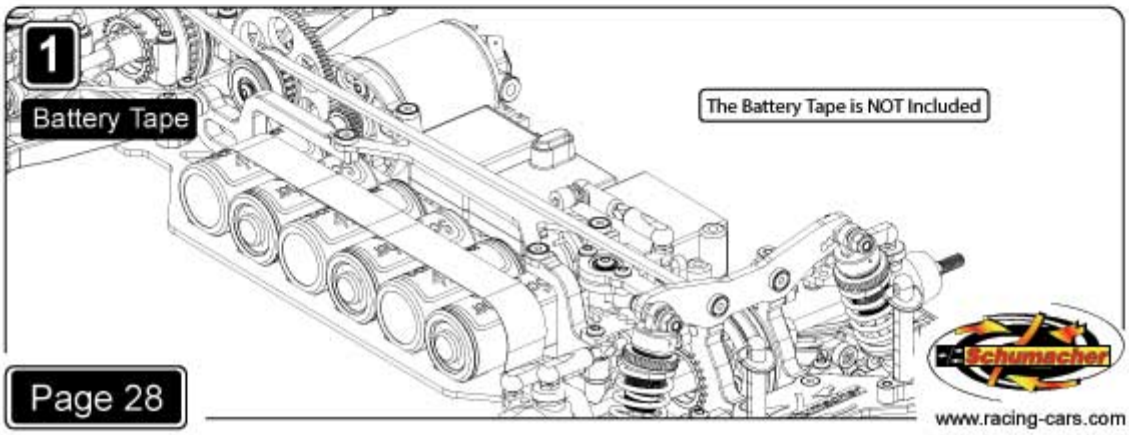

Schumacher
www.racing-cars.com

SPRINGS

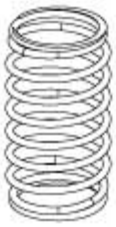

The spring rate controls the suspension stiffness. Spring adjusters only change the ride height. They DO NOT alter the suspension stiffness. On slippery or bumpy tracks use soft to medium rate springs, on flat or high grip tracks run medium to hard rate springs.

STEERING

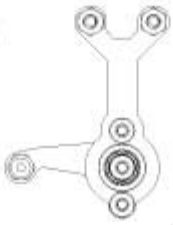

With the Ball centres Closer together you will get a more aggressive steering response, and further apart will give a less aggresive steering response.
The options are available when you purchase,
U3134 Steering Set

Track Settings

FRONT CASTOR

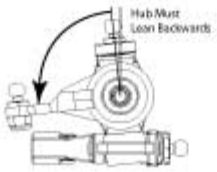

The front castor can be altered by changing the yoke. The car comes with 4° castor as standard. Less castor will give a quicker steering response, but could lead to power on understeer. More castor will give the opposite, slightly slower turn in, but more power on steering.

SHOCK BRACKETS (Shock Mounting)

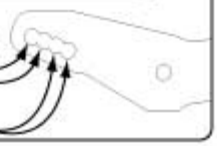

Vertical shock absorbers make the car react sharply to driver inputs.

A laydown shock offers a softer feel to the driver.

RIDE HEIGHT

In general always run the car as low as possible, without the chassis grounding out, as it rolls into corners.

A good starting point with rubber tyres is 5.5mm at the front and 6.0mm at the rear.

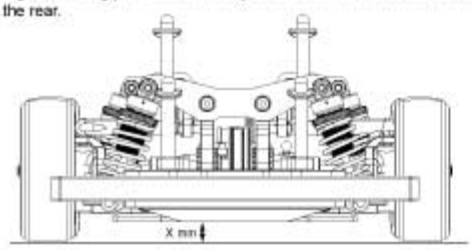

FRONT & REAR CAMBER

With maximum negative camber the car will have high levels of grip, but there may be the possibility of sudden breakaway in corners. Reducing the camber gives a more progressive slide, but may give less grip.

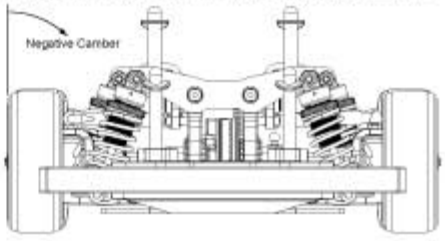

FRONT TOE-IN (Out-board)

The front toe-in is set by adjusting the steering trackrod turnbuckles.

Toe-In = A less than B
Toe-Out = A greater than B

Toe-in will give a more stable car, but will give less sharp turn in.
Toe-out will give the opposite, less stability with sharper turn in to the corners.
We recommend to start at about 0° or 1° toe-out.

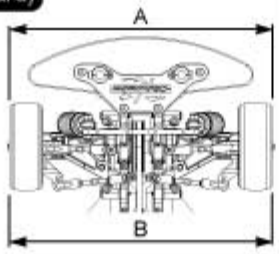

FRONT AND REAR TRACK WIDTH

TRACK WIDTH ADJUSTMENT
(In-board)

The track width of the car may be altered by adding or removing equal thickness grey suspension washers between the Screw blocks and the transmission housings.
When changing the track width ensure the driveshaft are fully engaged in the Diff outputs.
And the width does not exceed 190mm

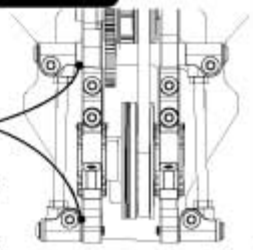

FRONT AND REAR WHEELBASE

WHEELBASE ADJUSTMENT
(In-board)

The wheelbase may be adjusted by moving the Qwik klips to either the front or the back of the wishbones.
This alters the front to rear weight Balance of the car.

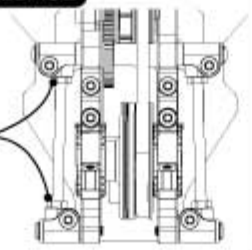

FRONT AND REAR INBOARD TOE-IN

TOE IN
(In-board)

The toe-in is set by adding or removing the grey suspension washers between the Screw blocks and the transmission housings, at the front or rear of the wishbones.
Each 0.50mm washer will change the Toe in by Approx 0.60°

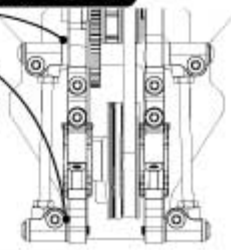

BATTERY OPTIONS

5 Cell (With Strap or Tape)

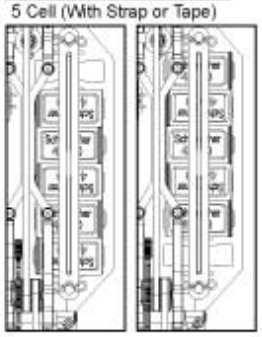

BATTERY OPTIONS

4 Cell (With Strap or Tape)

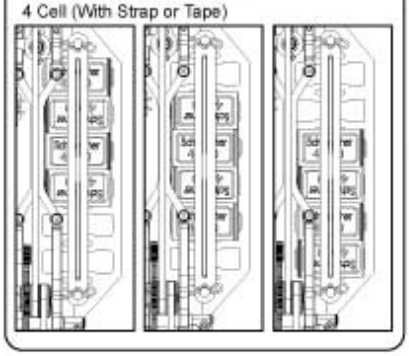

Track Settings

GEAR CHART 48Dp

Maximum Tooth Sum = 121.....Minimum Tooth Sum = 91.....Internal Ratio = 1.8:1

	15	16	17	18	19	20	21	22	23	24	25	26	27	28	29	30	31	32	33	34	35	36
89	10.68	10.01	9.42	8.90	8.43	8.01	7.63	7.28	6.97	6.68	6.41	6.16	5.93	5.72	5.52	5.34	5.17	5.01				
87	10.44	9.79	9.21	8.70	8.24	7.83	7.46	7.12	6.81	6.53	6.26	6.02	5.80	5.59	5.40	5.22	5.05	4.89	4.75	4.61		
85	10.20	9.56	9.00	8.50	8.05	7.65	7.29	6.95	6.65	6.38	6.12	5.88	5.67	5.46	5.28	5.10	4.94	4.78	4.64	4.50	4.37	4.25

GEAR CHART 64Dp

Maximum Tooth Sum = 161.....Minimum Tooth Sum = 121.....Internal Ratio = 1.8:1

	15	16	17	18	19	20	21	22	23	24	25	26	27	28	29	30	31	32	33	34	35	36
118	14.16	13.28	12.49	11.80	11.18	10.62	10.11	9.65	9.23	8.85	8.50	8.17	7.87	7.59	7.32	7.08	6.85	6.64	6.44	6.25	6.07	5.90
116	13.92	13.05	12.28	11.60	10.99	10.44	9.94	9.49	9.08	8.70	8.35	8.03	7.73	7.46	7.20	6.96	6.74	6.53	6.33	6.14	5.97	5.80
114	13.68	12.83	12.07	11.40	10.80	10.26	9.77	9.33	8.92	8.55	8.21	7.89	7.60	7.33	7.08	6.84	6.62	6.41	6.22	6.04	5.86	5.70

FRONT INBOARD PIN OPTIONS

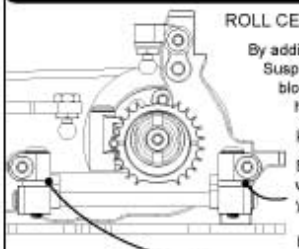

ROLL CENTRE ADJUSTMENT

By adding or removing the Grey Suspension washers betwwen the pivot blocks you are able to change the height of the roll centre.

KICK UP OR ANTI-DIVE

By adding the Grey Suspension washer at the front of the wishbone you will get anti-dive. 0.5mm = 0.5°

By adding the Grey Suspension washer at the rear of the wishbone you will get kick-up. 0.5mm = 0.5°

REAR INBOARD PIN OPTIONS

ROLL CENTRE ADJUSTMENT

By adding or removing the Grey Suspension washers betwwen the pivot blocks you are able to change the height of the roll centre.

SQUAT OR ANTI-SQUAT

By adding the Grey Suspension washer at the rear of the wishbone you will get Anti-Squat.
0.5mm Difference = 0.5°
By adding the Grey Suspension washer at the front of the wishbone you will get Pro-Squat.
0.5mm Difference = 0.5°

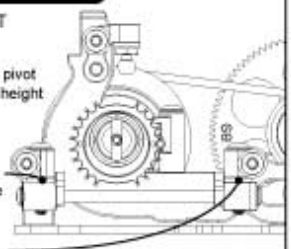

DIFF HEIGHT (HIGH OR LOW)

DIFF HEIGHT

Diff height adjustment is provided so that the car may run level driveshafts at ride height with different diameter tyres.

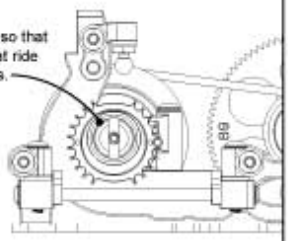

FRONT AND REAR SUSPENSION LINK

(Roll Centre)

HEIGHT ADJUSTMENT

The height of the inboard suspension link can be altered by adding or removing the violet spacer washers, between the link mount and the ball stud.

WIDTH ADJUSTMENT

The width of the inboard suspension link can be altered by adding or removing the Grey suspension washers, between the link mount and the Transmission housings.



Schumacher
www.racing-cars.com

K073 Mi-3 Pro Touring Car - 1-10 4WD Electric

CHASSIS PARTS

U1042 Aerial Mount - Universal
U119 Aerial Tube - Pack 4
U2244 Servo Mounts (pr)
U2460 Body Posts & R Clips (pk 4)
U2989 Ball Grippa Sockets - (pk 8)
U3145 CF Chassis - 2.0mm Kit - Mi-3
U3147 CF Top Deck - Kit Spec - Mi-3
U3150 CF Shock Bkt, Front - Mi-3
U3151 CF Shock Bkt, Rear - Mi-3
U3154 Foam Bumper - Mi-3
U3155 Front Bumper Mouldings - Mi-3
U3158 Alloy Body Post Block; Vertical Mount - Mi-3 (pr)
U3159 Alloy Body Post Block; Horizontal Mount - Mi-3 (pr)
U3166 Instruction Manual - Mi-3

BODYSHELLS & DECALS

FR36N Frewer Stratis 2004 - 190mm
FR5N Frewer BMW 320i 190mm
U2819 Spray Mask - No 1
U3167 Decal Sheet - Mi-3 (pk3)

SUSPENSION

U1430 Turnbuckle Adjuster - 39mm (pr)
U1440 Pro Pivot Pin; grooved 25mm x 1/8 (pr)
U2654 Steering Yoke Pivot Set - 2 pairs
U2718 Pro Pivot Pin; grooved 18mm x 1/8 (pr)
U2722 Ball Grippa Joints - U/Sh Stud 4prs
U2736 Steering Yoke; 2 degree - Mi-2 pr
U2737 Steering Yoke; Kit Std 4 degree - Mi-2 pr
U2738 Steering Yoke; 6 degree - Mi-2 pr
U2750 Droop Screw; M5x8mm pk4
U2882 Servo Saver Set; Light & Heavy Springs
U2990 Front Hub Carrier - Mi2 E.C.
U2991 Purple Alloy Wheel Hex; 8lim (pr)
U2992 Rear Hub Carrier - Mi2 E.C.
U3127 Wishbones; Graphite Front - Mi-3
U3128 Wishbones; Graphite Rear - Mi-3
U3129 Alloy Block; Screw - Mi-3 (pr)
U3130 Alloy Block; Pivot - Mi-3 (pr)
U3133 Alloy Top Link Mount - Mi-3 (pr)
U3134 Steering Post Set - Mi-3
U3135 Steering Centre Track Rod Set 2 - Mi-3
U3137 Shock Mounting Post - Mi-3 (pr)
U3142 Pro Pivot Pin - 55mm - Mi-3 (pr)
U750 Ball Grippa Joints-8hort Stud 8prs
U796 Turnbuckle Adjuster - 24mm (pr)
U797 Turnbuckle Adjuster - 35mm (pr)
U851 Ball Grippa Joints - Long Stud 8prs

SHOCK ABSORBERS

U2993 Race Shock Body; Nickel Teflon (pr)
U2994 Race Shock Collar; threaded adjuster (pr)
U2995 Race Shock Piston - CNC 2 Hole (pr)
U2996 Race Shock Piston - CNC 3 Hole (kit std) pr
U2997 Race Shock Rod; Ti-Nitride - 30mm (pr)
U2998 Race Shock Seal Housing (pr)
U2999 Race Shock Seal Rebuild Pack (pr)
U3000 Race Shock Top Cap (pr)
U3001 Race Shocks; fully assembled pair
U613 Spring Stop & Spacer Mouldings (pr)

SPRINGS

U2822 Spring Tuning Set - Pro-Touring (6 prs)
U2823 Pro-Touring Springs - White 14 lbs
U2824 Pro-Touring Springs - Blue 16lbs
U2825 Pro-Touring Springs - Green 18 lbs
U2826 Pro-Touring Springs - Red 20 lbs
U2827 Pro-Touring Springs - Yellow 23 lbs
U2828 Pro-Touring Springs - Violet 27 lbs

TRANSMISSION

U1895 M3x8mm Button Screws & Washers pk4
U1918 Spare Blades
U2573 Pro-Diff Screw Set - Mission
U2721 Rear Belt; Black Narrow - Mi-2
U2733 Diff Pulley Fences - Mi-2 & Mi-3
U2746 CNC Diff Pulley - 4mm
U2761 Diff Shims; 10 x 12
U2797 CNC Spool Assembly Lightweight - Mi-2
U2798 CNC Spool Pulley - Mi-2
U3011 Front Belt; 171t x 3.6mm
U3012 Front Belt; Grey Stock 171t x 3.6mm
U3013 Rear Belt; Grey Stock 60t x 3.6mm
U3020 Alloy CV Driveshaft (pr)
U3026 Pins & Screw-Alloy CV D/Shaft (4+1)
U3119 Alloy Diff Mount; Front Left - Mi-3
U3120 Alloy Diff Mount; Front Right - Mi-3
U3121 Alloy Diff & Motor Mount - Mi-3
U3122 Alloy Diff Mount; Rear Right - Mi-3
U3123 Alloy Eccentric - Mi-3 (pr)
U3124 Diff Retaining Post - Mi-3 (pr)
U3125 CNC Alloy Layshaft Post - Mi-3
U3126 CNC Pulley & Fences; 20T - Mi-3
U3136 Alloy Diff Output; Male - Mi-3
U3139 Alloy Diff Output; Female - Mi-3
U3140 Diff Washer - TriLobe (pr) - Mi-3
U3141 HD Spool Output - 1pc - Mi-3
U3160 85T 48DP CNC Spur Gear - Mi-3
U3161 87T 48DP CNC Spur Gear - Mi-3
U3162 89T 48DP CNC Spur Gear - Mi-3
U3170 Pins & Shims; Axle - Mi-3 pk4
U3223 Diff; Fully Assembled Ceramic - Mi-3
U3225 CNC Spool Assembly - Mi-2 & 3

SHOCK OIL

G030 Pure Silicone Shock Oil - 30w
G035 Pure Silicone Shock Oil - 35w
G040 Pure Silicone Shock Oil - 40w
G045 Pure Silicone Shock Oil - 45w
G050 Pure Silicone Shock Oil - 50w
G055 Pure Silicone Shock Oil - 55w
G060 Pure Silicone Shock Oil - 60w
G070 Pure Silicone Shock Oil - 70w
G080 Pure Silicone Shock Oil - 80w
G100 Pure Silicone Shock Oil - 100w

BEARINGS & BALLS

G200 ZX1 - Microlube
H1031 Bearing Blaster Aerosol 500ml
U1301 Silicone Diff Lube - Pot
U1439 Ball Bearing - 5 x 9 x 3 Non Fl (pr)
U1954 Pro - Thrust Bearing
U1957 Moly Axle Grease - Pot
U2148 Ball Bearing - 5 x 10 x 4 Shielded (pr)
U2459 Tungsten Carbide Diff Balls 2.5mm(pk12)
U2574 Ball Bearing - 5 x 9 x 2.5 (pr)
U2862 Ceramic Bearing - 5 x 10 x 4 Shielded (pr)
U3016 Ball Bearing - 10x15x4 (pr)
U3017 Ceramic Bearing - 10x15x4 (pr)
U3019 Ceramic Nitride Diff Balls 2.5mm (pk12)
U3136 Ball Bearing - 5 x 8 x 2.5 (pr)
U3171 Ceramic Bearing set - Mi-3

SPEED PACKS

H1010 Body Clips - Flouresecent Yellow (pk10)
H1011 Body Clips - Flouresecent Green (pk10)
H1012 Body Clips - Flouresecent Red (pk10)
H1013 Body Clips - Metallic Red (pk10)
H1014 Body Clips - Metallic Blue (pk10)
H1015 Body Clips - Metallic Purple (pk10)
U1547 SPEED PACK - M3 Nuts
U1548 SPEED PACK - M3 Washers
U1549 SPEED PACK - M4 Nuts & Washers
U1550 SPEED PACK - Socket Wrenches (pk3)
U1551 SPEED PACK - E Clips 2x8pcs
U1552 SPEED PACK - R Clips
U1606 SPEED PACK - Servo Tape
U1633 SPEED PACK - Small Pins (pk)
U1960 SPEED PACK - O Rings; Various
U2125 SPEED PACK - Grub-Set Screws M3 M4
U2135 M4 Nyloc Wheel Nut - Purple Alloy (pk4)
U2187 M3 Nyloc Nut - Purple Alloy (pk8)
U2531 SPEED PACK - Circlips Various 12 pcs
U2760 SPEED PACK - M3 Button Hd; 4 to 20
U2858 Alloy M3x6 Spacer Set;0.5;1;2;3mm - 16pcs
U2988 M3 Csk Washers - Purple Alloy (pk10)
U3002 Wheel Spacer Washers (pk10)
U3021 SPEED PACK - M3x6 Csk Allen Hi-T
U3022 SPEED PACK - M3x8 Csk Allen Hi-T
U3023 SPEED PACK - M3x10 Csk Allen Hi-T
U3024 SPEED PACK - M3x12 Csk Allen Hi-T
U3131 Alloy Spacers M3x7mm 0.5;1.0;2.0mm (pk18)
U3168 SPEED PACK - M2.5 x Screws (pk 10)

SPEED SECRET - OPTION PARTS

H1024 Alloy 6 Fin Motor Heatsink; purple
H1026 Ride Height Gauge; Purple Alloy; 0-10mm
H1027 Droop Gauge Set; Purple Alloy - Touring
S500 Colour Catalogue - 60 pages
S5008 Schumacher BANNER
U1572 Titanium Turnbuckle; purple - 39mm (pr)
U1576 Titanium Pivot Pin; purple - 25mm (pr)
U1905 Titanium Turnbuckle; purple - 35mm (pr)
U2053 Titanium Turnbuckle; purple - 25mm (pr)
U2075 Camber & Ride Height Gauges - C/C
U2096 Aerial Mount; Purple Chrome - Universal
U2100 Set Up Wheels;Camber&Toe In-SST
U2251 Kwik Klip; 1/8x1.0 & 2.0mm
U2298 Schumacher Pit Dude Car Stand
U2719 Titanium Pivot Pin; purple - 18mm pr
U2739 Alloy 4 deg Steering Yokes; purple - Mi-2
U2741 Alloy Rear Hub Carriers; purple - Mi-2 EC & Mi-3
U2753 Heavy Duty Front One Way Assy - Mi-2
U2756 One Way Pulley Assembly - Mi-2
U2810 M4 Nyloc Wheel Nut - Red Alloy (pk4)
U2811 M4 Nyloc Wheel Nut - Blue Alloy (pk4)
U2812 M4 Nyloc Wheel Nut - Black Alloy (pk4)
U2813 M4 Nyloc Wheel Nut - Gold Alloy (pk4)
U2843 CNC Pulley; Heavy Duty One Way-Mi-2
U2844 Hub & One Ways; Heavy Duty - Mi-2
U2845 Output; Heavy Duty One Way - Mi-2 1pc
U3132 Kwik Clips 0.25 & 0.5mm (pk8)
U3144 Titanium Turnbuckle Set - Mi-3 (7pcs)
U3146 CF Chassis - 2.5mm Stiff - Mi-3
U3148 CF Top Deck - Stiff - Mi-3
U3149 CF Top Deck - Flex - Mi-3
U3152 CF Shock Bkt, Front - Low - Mi-3
U3153 CF Shock Bkt, Rear - Low - Mi-3
U3156 Roll Bar Set; Front 1.2-1.4-1.6 - Mi-3
U3157 Roll Bar Set; Rear 1.2-1.4-1.6 - Mi-3
U3163 114T 64dp CNC Spur Gear - Mi-3
U3164 116T 64dp CNC Spur Gear - Mi-3
U3165 118T 64dp CNC Spur Gear - Mi-3
U3221 Grooveless Purple Alloy Wheel Hex; Slim - Mi-3 (pr)
U3222 C/F Battery Strap & Alloy Posts - Mi3
U3224 CF Chassis - 5 Cell 2.00mm - Mi-3

TEAM CLOTHING

G331L	T Blue - Large
G331M	T Blue - Medium
G3318	T Blue - Small Man
G331XL	T Blue - X-Large
G331XXL	T Blue - XX-Large
G332L	T White - Large
G332M	T White - Medium
G3325	T White - Small Man
G332XL	T White - X-Large
G332XXL	T White - XX-Large
G333L	Polo - Large
G333M	Polo - Medium
G3338	Polo - Small Man
G333XL	Polo - X-Large
G333XXL	Polo - XX-Large
G334	Cap - Black, Meduim 58cm
G335	Cap - Black, Large 62cm

ELECTRONICS

G837	Mini Temp Gun - 420F 230C
G848	Tyre Warmers 1/10 Trg 7.2-12v

CHARGERS

CE3760	Competition Electronics Turbo 35 GFX
CE4310	Comp Electronics - Pit Bull X3 Charger
G856	PC6 Charger NiCd+NiMh 1-12 Cells

SPEEDCONTROLS

Z100	Keyence Rapida C Pro ESC; Blue
Z200	Keyence eXstraight ESC N-BL

ELECTRIC MOTORS

FAN32415	Fantom ATLAS Blue – 19T Team Spec
FAN36102	Fantom Alloy 2 - 6x1 +Comm Ring
FAN36104	Fantom Alloy 2 - 7x1 +Comm Ring
FAN36105	Fantom Alloy 2 - 8x1 +Comm Ring
FAN51501	Springs Alloy 2 - Gold Medium
FAN51502	Springs Alloy 2 - Silver Heavy
FAN52527	Brushes Alloy 2 - Hi Silver/Hi Power (pr)
FAN53610	Fantom O Ring Spacers (pk12)
FAN53611	Fantom 0.012 Motor Spacers (pk12)
FAN53612	Fantom 0.020 Motor Spacers (pk12)
FAN54302	Fantom Mod Motor Bearing Oil
FAN54303	Fantom Stock Motor Bushing Oil
FAN86315	Brushes 767 Stock LD (pr)
G240	Putnam Pro Stock Laydown Brush - 1 pr
G602	Fantom Silver Hi RPM 27t Stk
G961	Motor Capacitors (pk 3)

BATTERIES

G747	IB 4200WC NiMh XVS TEAM 6pk
G748	IB 4200WC NiMh XVS MATCH 6pk
G749	IB 4200WC NiMh XVS 6 Pk
G750	IB 4200WC NiMh XVS TEAM 4 pack
G751	IB 4200WC NiMh XVS TEAM 5 pack
G752	Core RC - 5000mAHr 7.4v LiPo
G793	Silicone Wire - 2x50cm Red/Black
G794	Battery Bars - pk5
G795	Female Connector Tubes (pk 10)
G796	Male Connector Plugs (pk 2)
H1028	Battery Soldering Stand
H1039	Battery Tape - Natural 50m x 17mm
H1040	Battery Tape - Purple 50m x 17mm
H1046	Power Connector, Red 2 Way - Male & Female
H1047	Power Connector, Black 2 Way - Male & Female
H1048	Power Connector, Red 2 Way Females - pk4
H1049	Power Connector, Black 2 Way Females - pk4
H1050	Battery Soldering Jig - 4200 size
H1054	Polarised Plug and Socket 3.5mm - pair

TOOLS

AT1142	AT8 Set Up Gauges - 1/10th Touring
H1009	Lexan Scissors; curved
H1032	Alloy Camber Gauge - 1/10th
HW001	Wiha Precision Hex Driver - 1.3mm
HW002	Wiha Precision Hex Driver - 1.5mm
HW003	Wiha Precision Hex Driver - 2.0mm
HW004	Wiha Precision Hex Driver - 2.5mm
HW006	Wiha Precision Nut Driver - M3
HW007	Wiha Precision Nut Driver - M4
PYS1010	Alloy Grip Wrench Set; 1.5;2.0;2.5;3.0mm
PYS1060	Socket Set, Metric - 4 pcs
U2789	Schumacher Hex Driver - 1.5mm
U2790	Schumacher Hex Driver - 2.0mm
U2791	Schumacher Hex Driver - 2.5mm
U2795	Schumacher M3 Nut Driver
U2796	Schumacher M4 Nut Driver
U2818	Schumacher Body Reamer
U3115	Schumacher Hex Driver - 1.5mm Tip only
U3116	Schumacher Hex Driver - 2.0mm Tip only
U3117	Schumacher Hex Driver - 2.5mm Tip only



www.racing-cars.com



1/10 TOURING WHEELS

U1932	Wheel; 5 spoke 25mm - White (Pk4)
U1933	Wheel; 5 spoke 25mm - Black (Pk4)
U1934	Wheel; 5 spoke 25mm - Satin (Pk4)
U1935	Wheel; 5 spoke 25mm - Chr (Pk4)
U2032	Wheel; 5 sp 25mm +5mm - Gold (pr) (Pk4)
U2123	Wheel; 5 spoke 20mm - White (Pk4)
U2124	Wheel; 5 spoke 20mm - Black (Pk4)
U2170	Wheel; 12 spoke 25mm - White (Pk4)
U2171	Wheel; 12 spoke 20mm - White (Pk4)
U2172	Wheel; 12 spoke 25mm - Purple Chrome(Pk4)
U2173	Wheel; 5 spoke 25mm - Purple Chrome (Pk4)
U2296	Wheel; Dish 25mm - White (Pk4)
U2300	Wheel; 5 sp 25mm - Gold (pr) (Pk4)
U2368	Wheel; 12 spoke 24mm - White (Pk4)
U2393	Wheel; 12 spoke 24mm - Black(Pk4)
U2500	Rev-Lite; 24mm - White (Pk4)
U2501	Rev-Lite; 24mm InchUp - White(Pk4)
U2777	Rev-Lite; Flex 24mm - White (Pk4)
U2799	Rev-Lite Stiff; 24mm - White (Pk4)

1/10 TOURING TYRES & INSERTS

U6622	Slicks TC 25mm - Yellow (pr)
U6623	SST Mini Pins 24/25 - Blue
U6624	SST Mini Pins 24/25 - Yellow
U6626	SST Foam Tyre Insert - 24/25 Soft
U6627	SST Foam Tyre Insert - 24/25 Hard
U6628	SST Foam Tyre Insert - 24/25 Comp
U6629	SST Rally 24/25 - Yellow
U6630	SST Rally 24/25 - White
U6634	SST Foam Tyre Insert - 20 Soft
U6635	SST Foam Tyre Insert - 20 Hard
U6670	SST Mini Pins 20 - Blue
U6671	SST Mini Pins 20 - Yellow
U6672	SST Belted Slick 25 - White
U6683	SST Dragon 25mm B20 compound
U6690	SST Carpet Dragon 24/25mm
U6695	Moulded LP Insert Orange X-Soft (pr)
U6696	SST Moulded LP Insert Green Med (pr)
U6699	SST LP24 Foam Insert;Med Blk
U6700	SST LP24 Foam Insert;Soft Gy
U6713	Moulded CP Insert Magenta X-Soft (pr)
U6714	Moulded CP Insert Aqua - Soft (pr)
U6716	SST Mini Pins 24/25 - Green
U6717	SST Mini Pins 20 - Green

SOREX - TOURING CAR TYRES

XCO-20R	Sorex Competition Tyre - 20R
XCO-24R	Sorex Competition Tyre - 24R
XCO-28R	Sorex Competition Tyre - 28R
XCO-32R	Sorex Competition Tyre - 32R
XCO-36R	Sorex Competition Tyre - 36R
XCO-40R	Sorex Competition Tyre - 40R
XG-24BM	Sorex Glued 24R+Med B+Revlite24 pk4
XG-28BM	Sorex Glued 28R+Med B+Revlite24 pk4
XG-32BM	Sorex Glued 32R+Med B+Revlite24 pk4
XG-32CM	Sorex Glued 32R+Med C+Revlite24 pk4
XG-36BM	Sorex Glued 36R+Med B+Revlite24 pk4
XG-36CM	Sorex Glued 36R+Med C+Revlite24 pk4
XMA-24F	Sorex Moulded Insert - A Firm pr
XMA-24M	Sorex Moulded Insert - A Med pr
XMB-24F	Sorex Moulded Insert - B Firm pr
XMB-24M	Sorex Moulded Insert - B Med pr
XMC-24F	Sorex Moulded Insert - C Firm pr
XMC-24M	Sorex Moulded Insert - C Med pr
XSW-102	Sorex 24mm Dish Wheel - 4pcs
XSW-501	Sorex 24mm 5 Spoke Wheel - 4 pcs

PINIONS

U2305	16T Pinion - 48 D.P.
U2306	17T Pinion - 48 D.P.
U2307	18T Pinion - 48 D.P.
U2308	19T Pinion - 48 D.P.
U2309	20T Pinion - 48 D.P.
U2310	21T Pinion - 48 D.P.
U2311	22T Pinion - 48 D.P.
U2312	23T Pinion - 48 D.P.
U2313	24T Pinion - 48 D.P.
U2314	25T Pinion - 48 D.P.
U2315	26T Pinion - 48 D.P.
U2316	27T Pinion - 48 D.P.
U2317	28T Pinion - 48 D.P.
U2318	29T Pinion - 48 D.P.
U2319	30T Pinion - 48 D.P.
U2321	31T Pinion - 48 D.P.
U2322	32T Pinion - 48 D.P.

ACCESSORIES

CJ38020	JRP Car Stand
CR001	CORE RC Motor & Battery Case
CR002	CORE RC Parts Box - 11x17x3cm
CR003	CORE RC Parts Box - 24x11x3.3cm
MC3	Mega Cargo Carrier; 1/10 Touring