Mi5

Instruction Manual



racing-cars.com

Schumacher Racing
71-73 Tenter Road
Moulton Park
Northampton
NN3 6AX
U.K
www.racing-cars.com

Additional Items Required

Transmitter and Receiver
(including batteries for tx)

CR151
CODE 2.4G 2 Stick 3Ch Tx+Rx
CR152
CODE 2.4G 2 Stick 3Ch Receiver ONLY



Servo



Electronic Speed Control



Li-Po Battery



Motor





Pinion Gear

Battery Charger
CR161



Bodyshell



Paint





C4450
CS Superglue 20g



Wheels & Tyres

G796 Male Connector Plugs



SPW1403
High Current 14AWG Wire



Tools

U2818 Schumacher Body Reamer



Long nose Pliers



CR044 Curved Body Scissors



U2789 Hex Driver - 1.5mm
U2790 Hex Driver - 2.0mm
U2791 Hex Driver - 2.5mm
U2792 Hex Driver - 3.0mm



U2795 M3 Nut Driver
U2796 M4 Nut Driver



Soldering Iron
CR266 40w
CR275 80w



U3107 - Solder

Mi5

Schumacher Racing stocks and distributes the following manufacturers products and full product listings are available on our website at www.racing-cars.com

PLEASE NOTE THAT SOME OF THE PRODUCT RANGES BELOW ARE ONLY AVAILABLE IN THE UNITED KINGDOM.

SPEC R
CS-ELECTRONIC
TEAM SOREX
ARROWMAX
CORE-RC .com
NOSRAM
GM RACING
EastCoast BodiesTune
RHEINARD 33D
MonTech RACING
THUNDER POWER RC
EDS Specialized R/C Tools

IMPORTANT SAFETY NOTES

- This product is not suitable for children under the age of 14, without the direct supervision of an adult.
- Select an area for assembly that is away from the reach of small children. The parts in this kit are small and can be swallowed by children causing choking and possible internal injuries.
- Exercise care when using hand tools and sharp instruments during assembly.
- Carefully read all manufacturers warnings and cautions for any additional parts used in the construction.
- In line with our policy of continuous development the exact details of the kit may vary.

Step 1 A

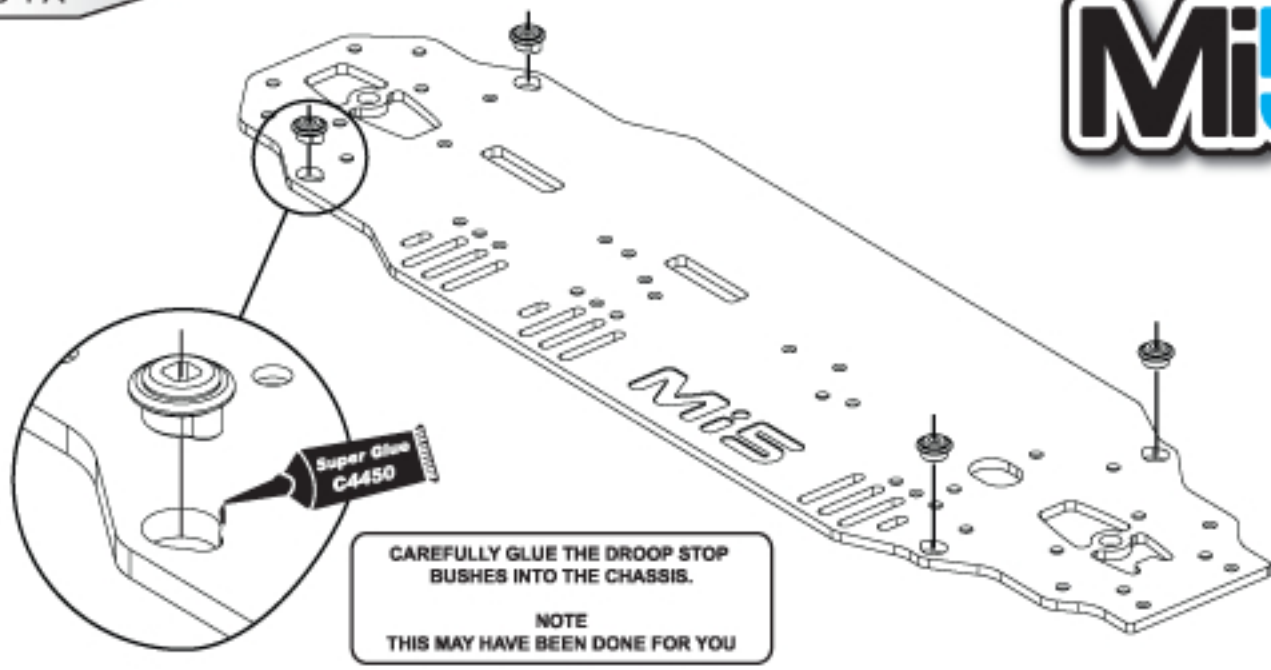

CAREFULLY GLUE THE DROOP STOP BUSHES INTO THE CHASSIS.

NOTE
THIS MAY HAVE BEEN DONE FOR YOU

Step 1 B

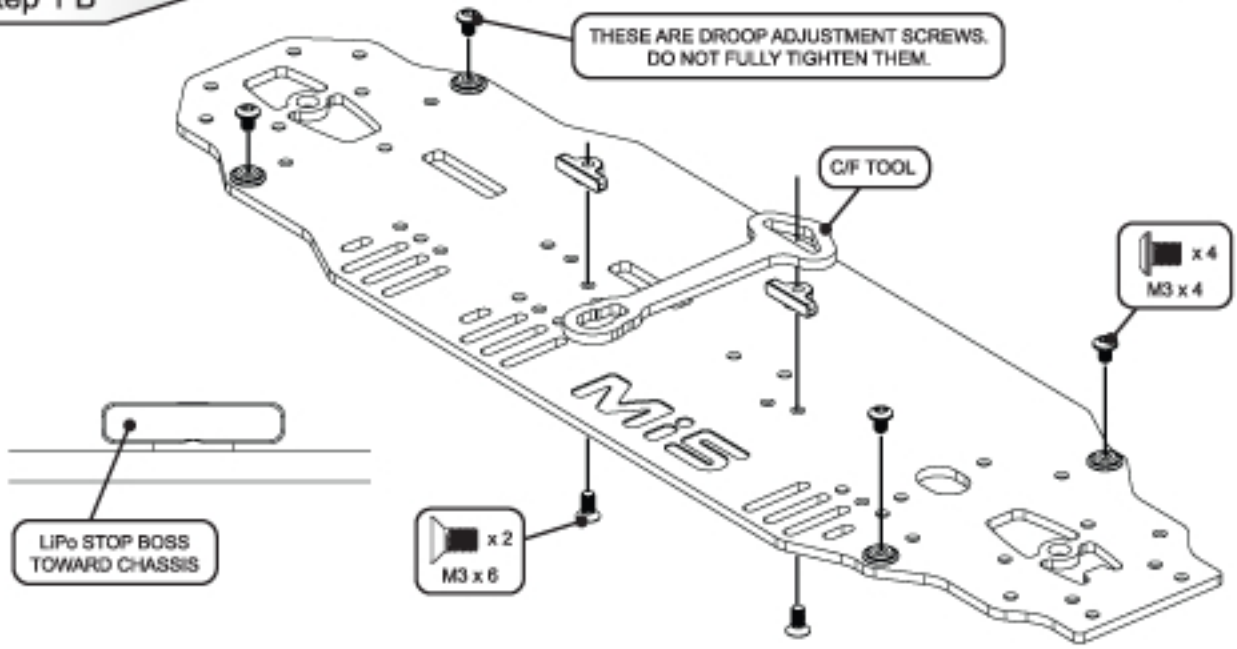

Step 1 C

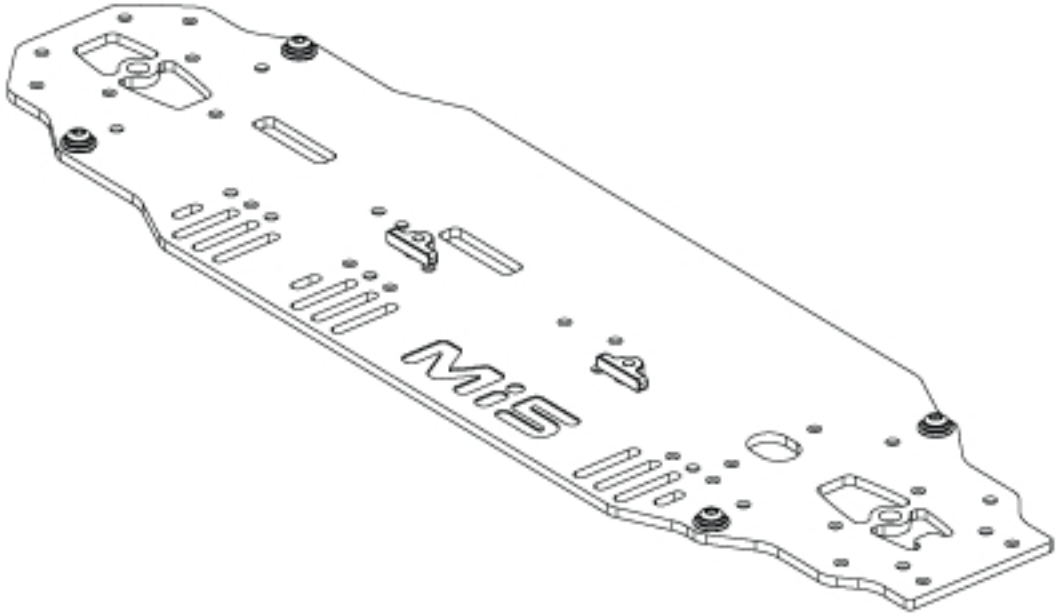

Step 2 A

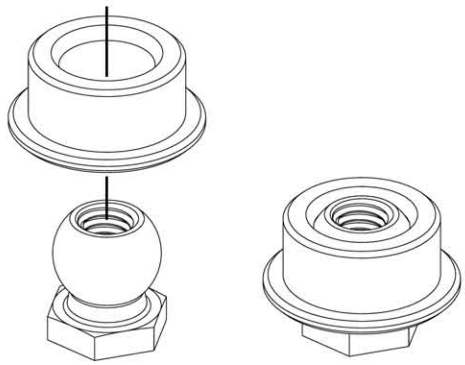

SNAP ALL THE PIVOT BALLS INTO THE SOCKETS

Step 2 B

GLUE THE SOCKETS INTO THE WISHBONES. TAKE GREAT CARE NOT TO GET GLUE ON THE PIVOT BALLS.

NOTE
THIS MAY HAVE BEEN DONE FOR YOU

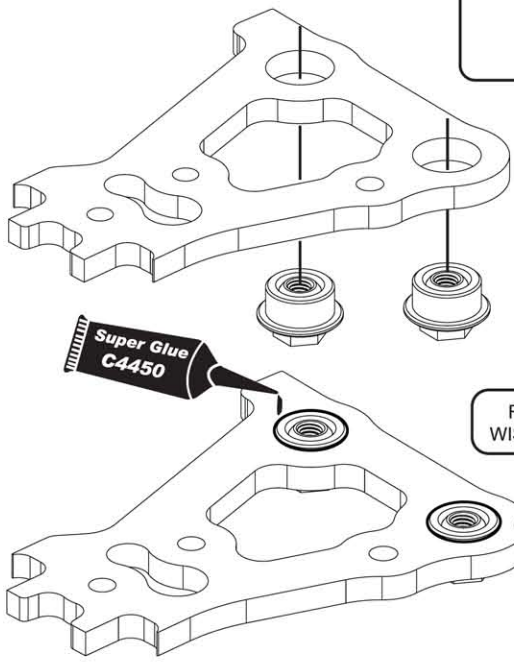

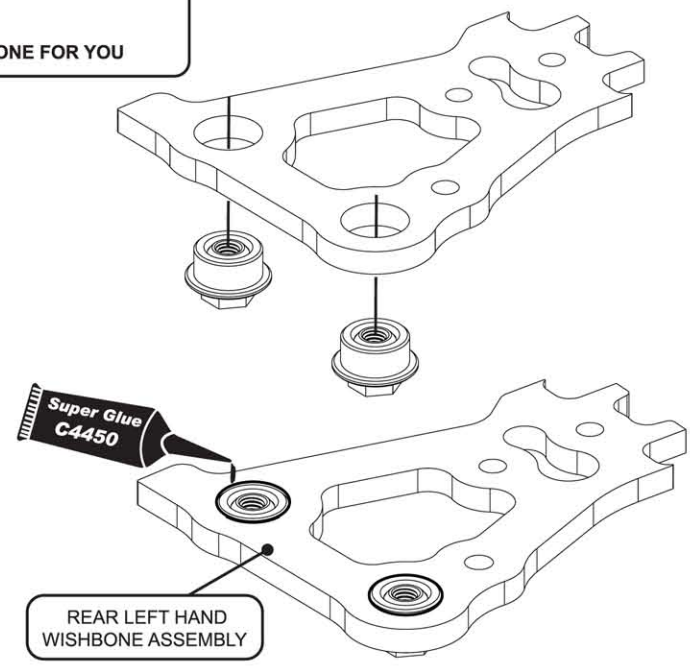

Step 2 C

GLUE THE SOCKETS INTO THE WISHBONES. TAKE GREAT CARE NOT TO GET GLUE ON THE PIVOT BALLS.

NOTE
THIS MAY HAVE BEEN DONE FOR YOU

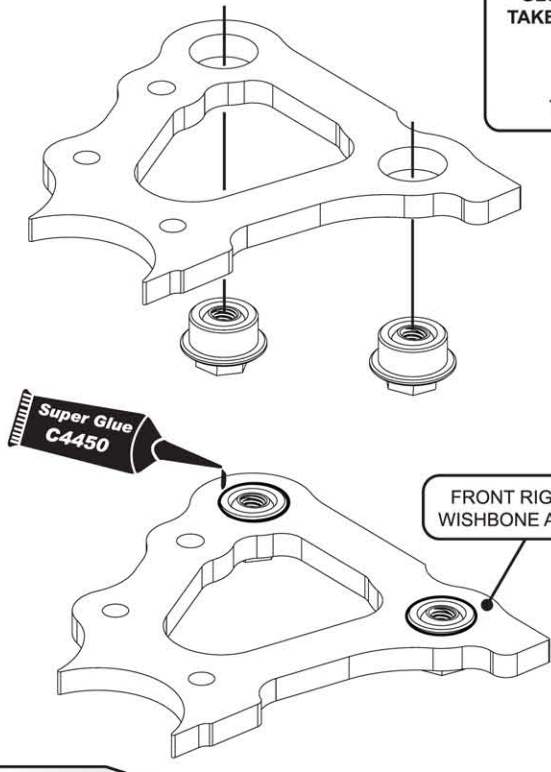

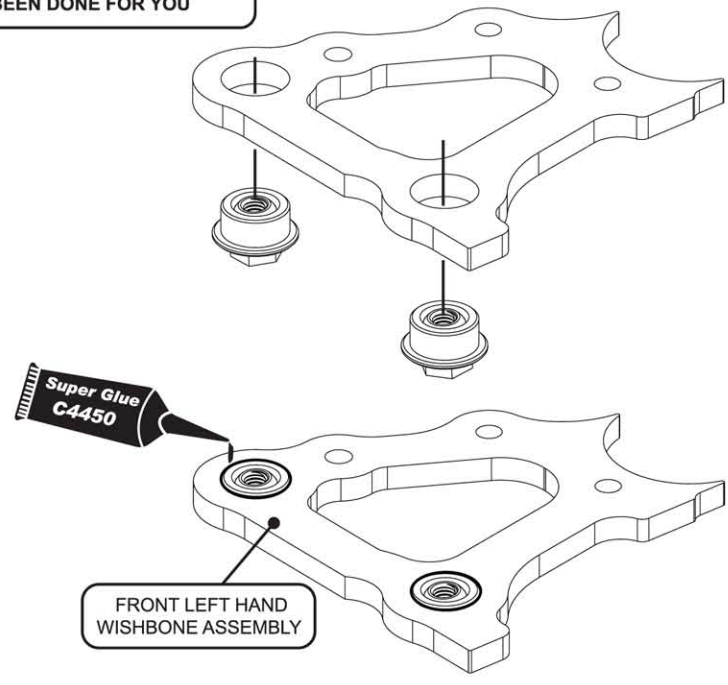

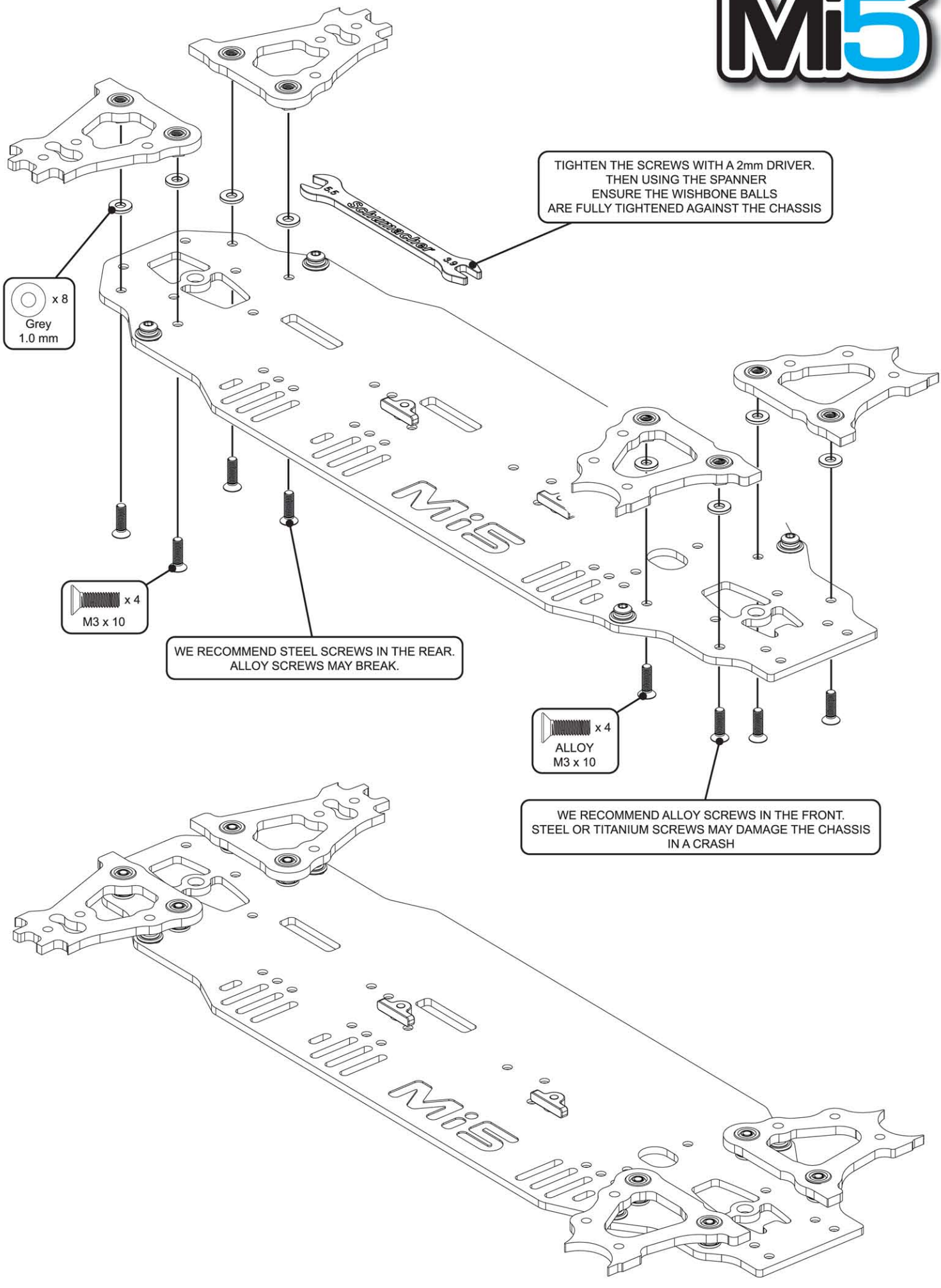
TIGHTEN THE SCREWS WITH A 2mm DRIVER.
THEN USING THE SPANNER
ENSURE THE WISHBONE BALLS
ARE FULLY TIGHTENED AGAINST THE CHASSIS
x 8
Grey
1.0 mm
x 4
M3 x 10
WE RECOMMEND STEEL SCREWS IN THE REAR.
ALLOY SCREWS MAY BREAK.
x 4
ALLOY
M3 x 10
WE RECOMMEND ALLOY SCREWS IN THE FRONT.
STEEL OR TITANIUM SCREWS MAY DAMAGE THE CHASSIS
IN A CRASH

Step 3

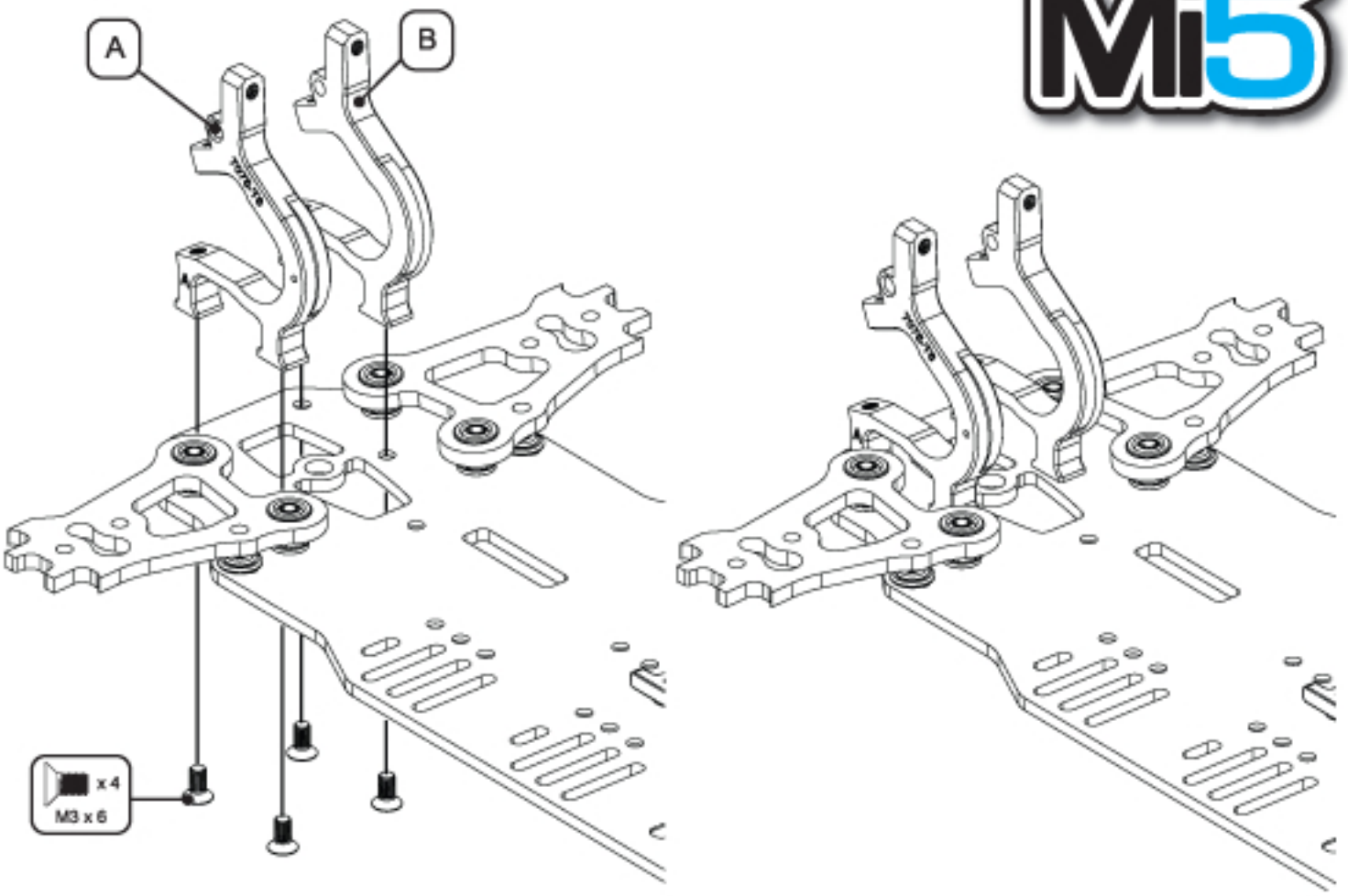

Step 4

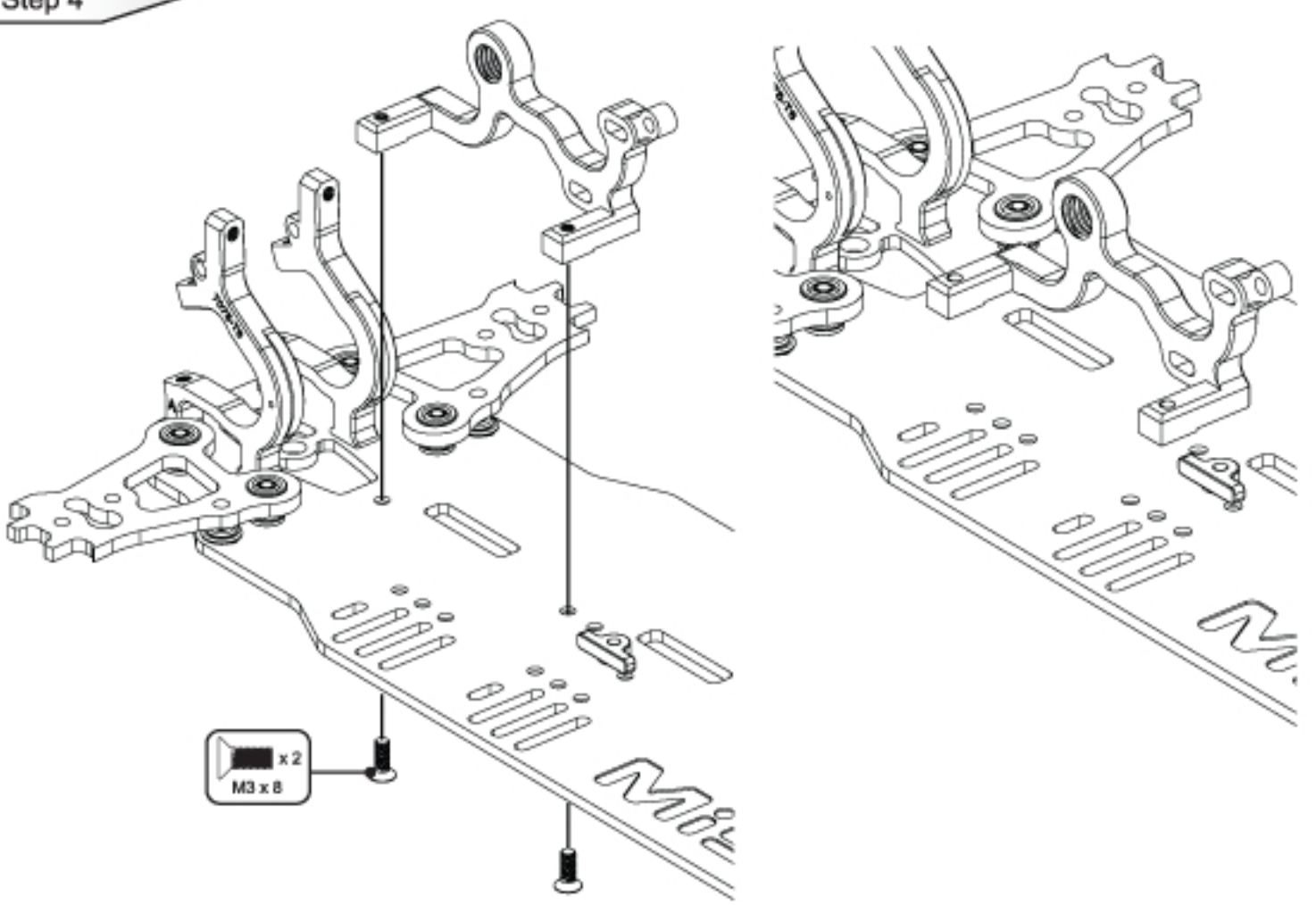

Step 5

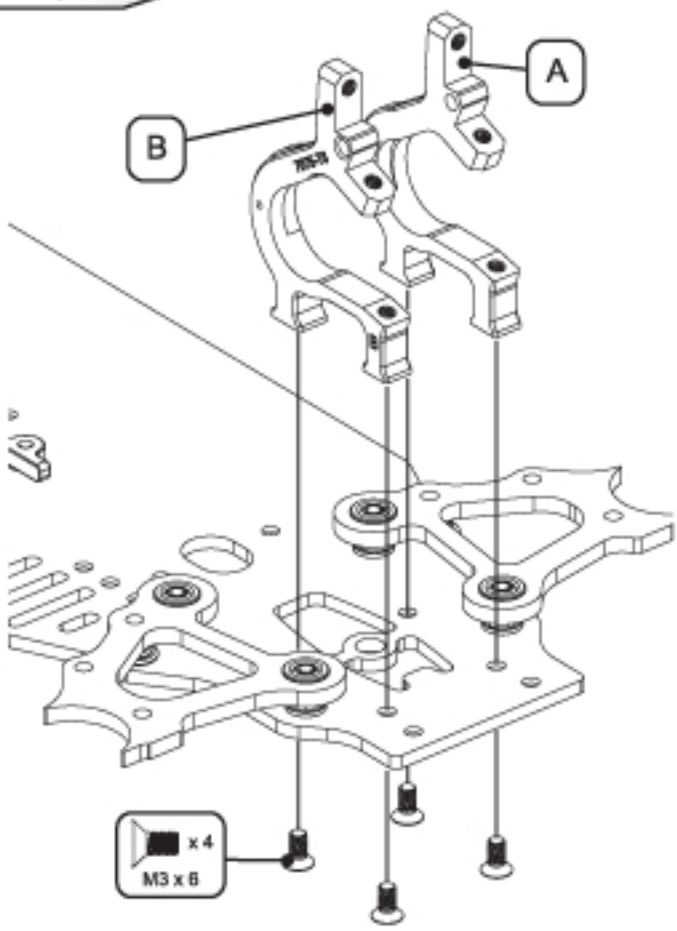

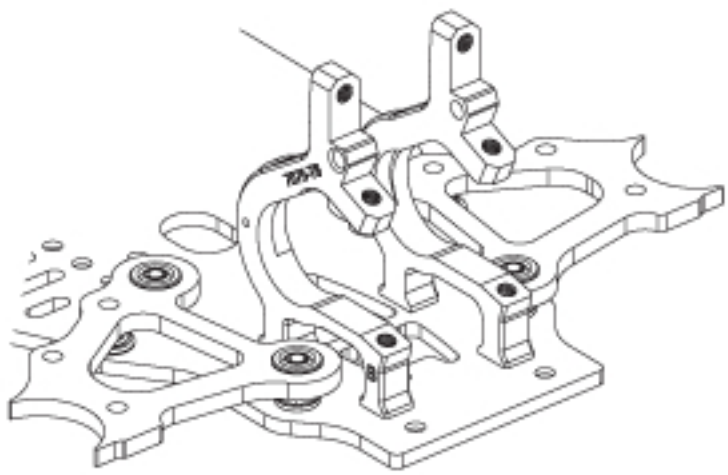

Step 6

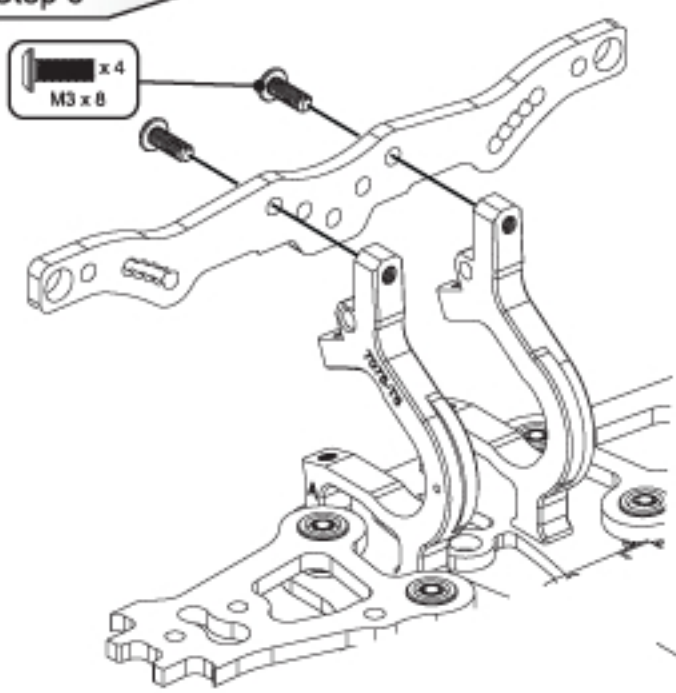

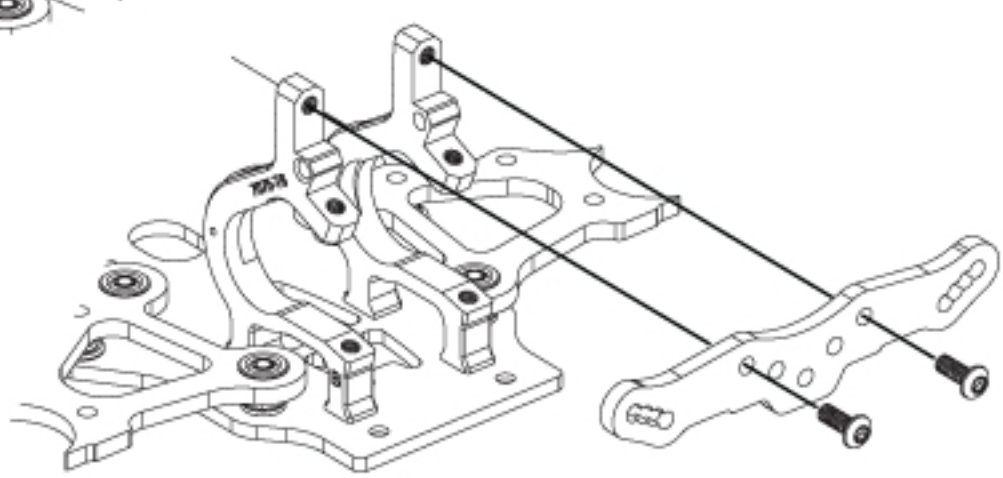

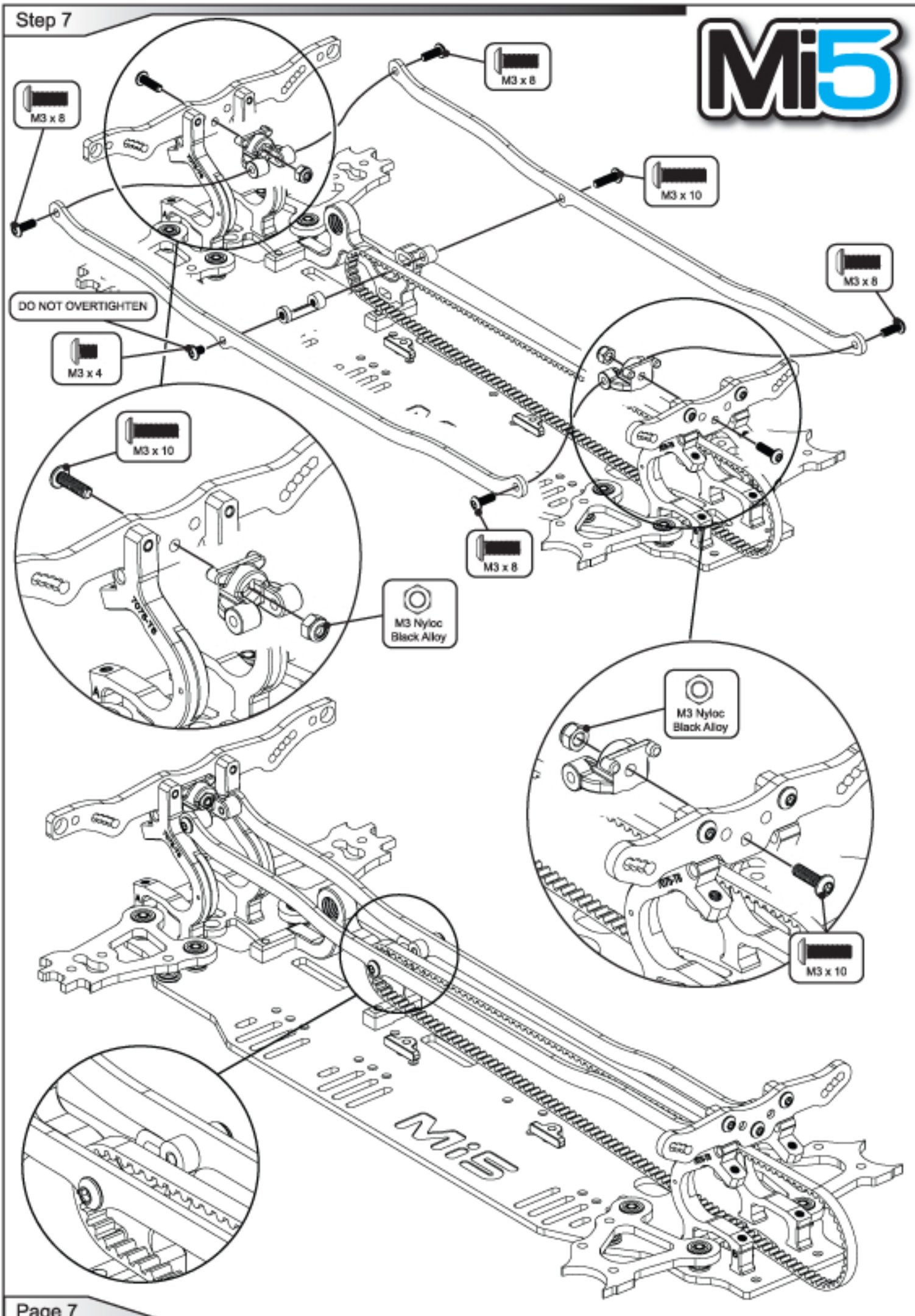
M3 x 8
M3 x 8
M3 x 10
M3 x 8
DO NOT OVERTIGHTEN
M3 x 4
M3 x 10
M3 x 8
M3 Nyloc
Black Alloy
M3 Nyloc
Black Alloy
M3 x 10

Step 8

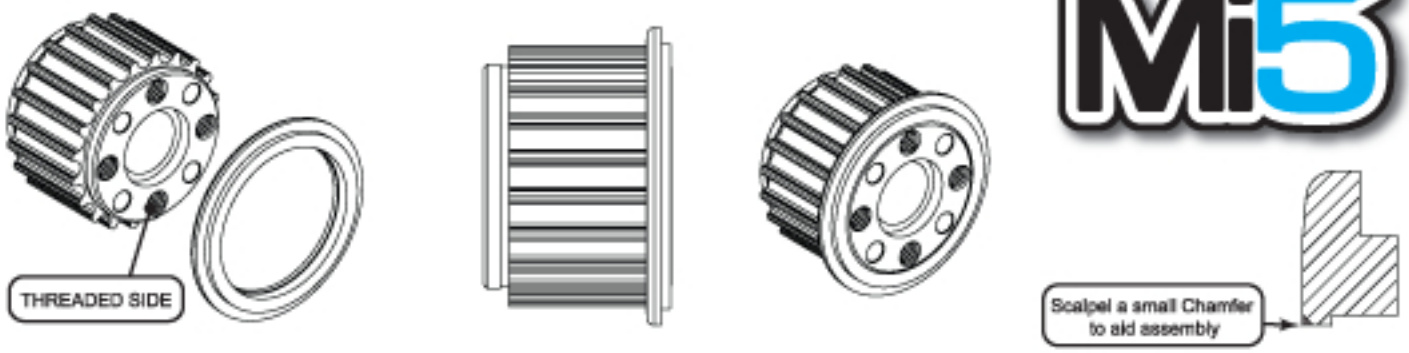

Step 9

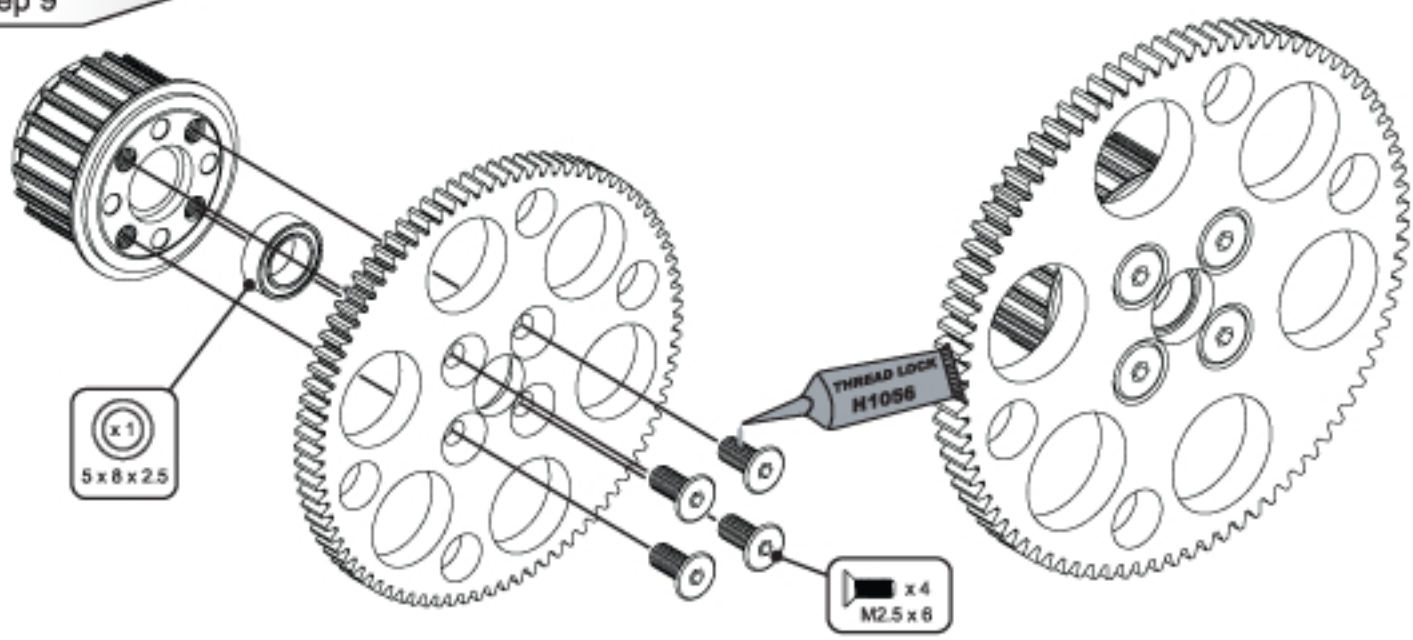

Step 10

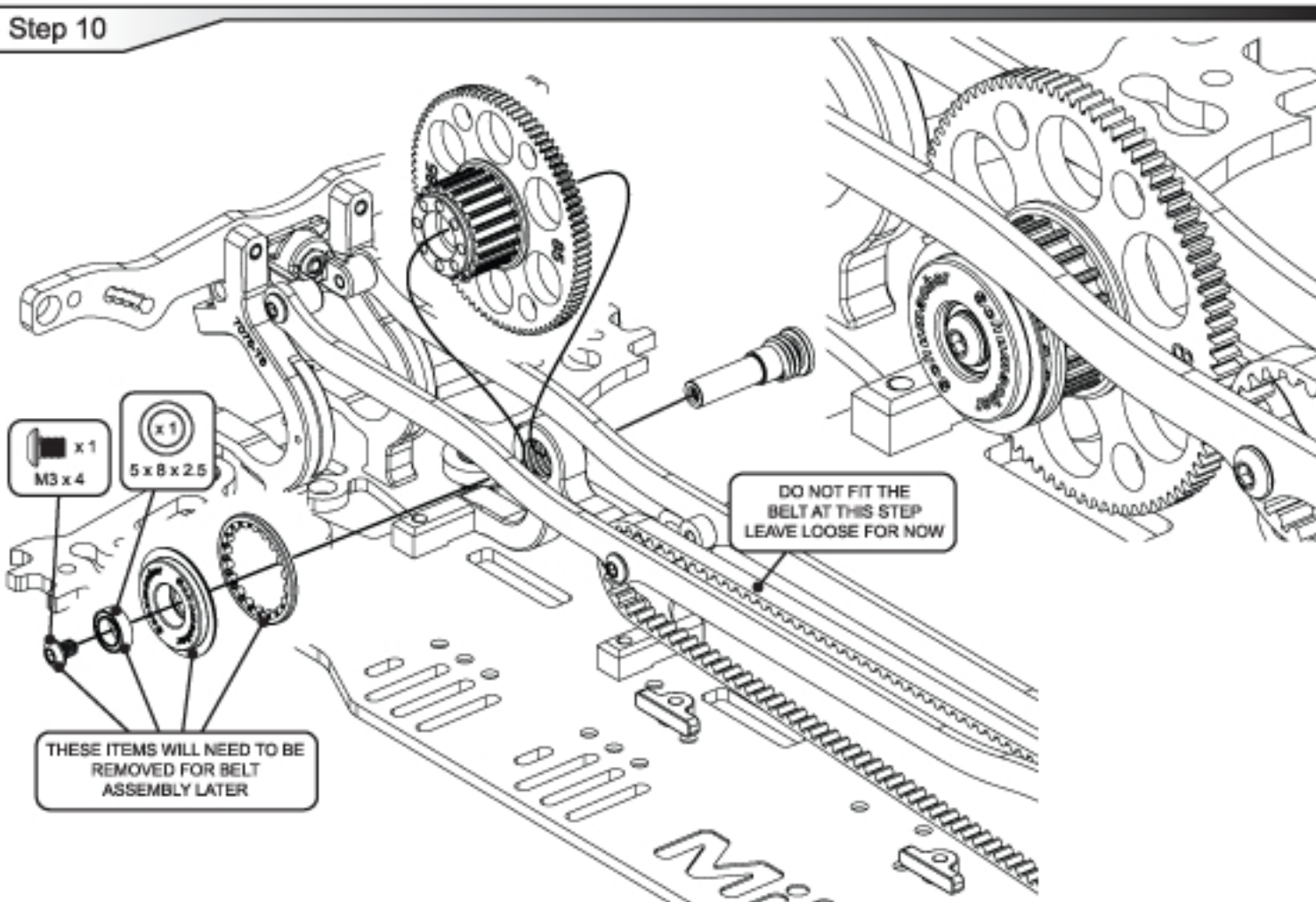

Step 11

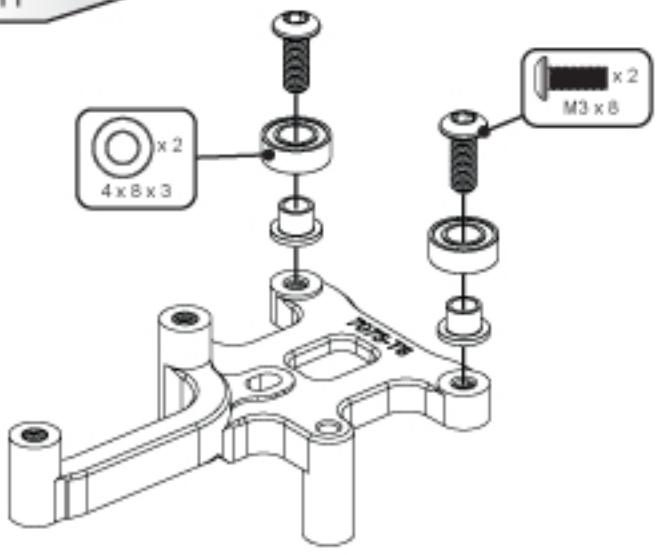

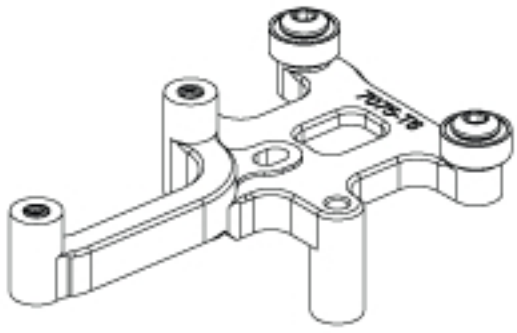

Step 12

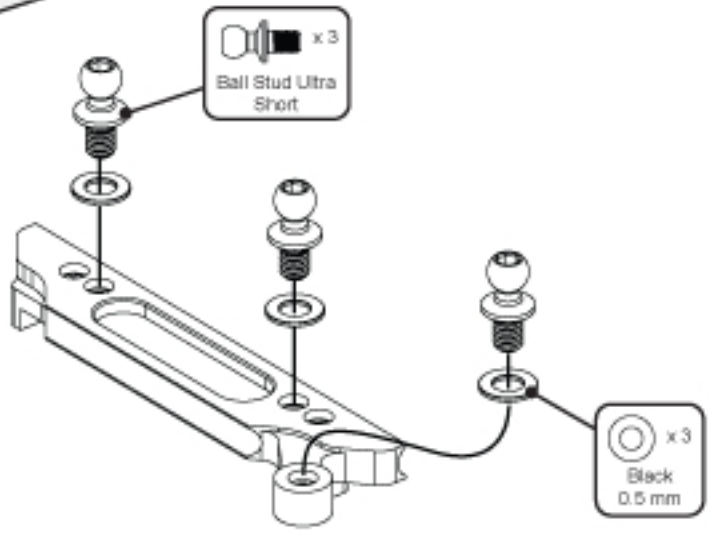

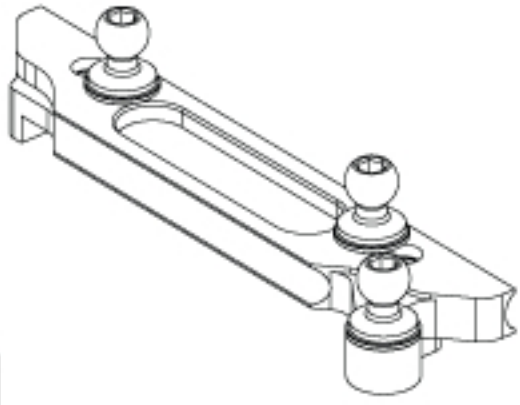

Step 13 A

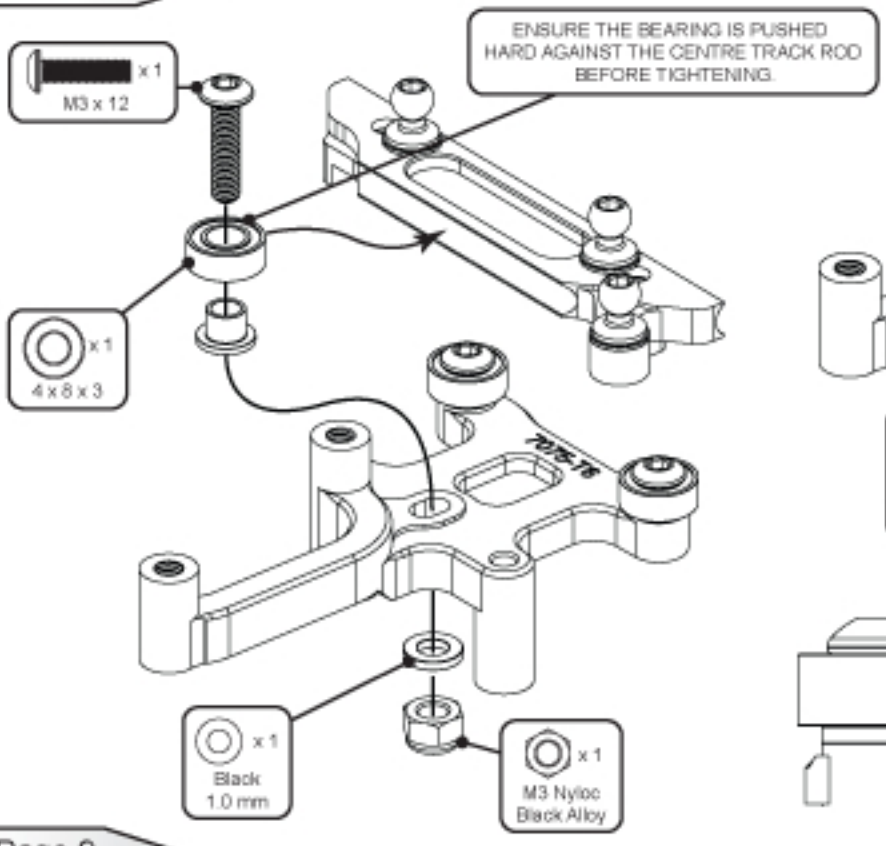

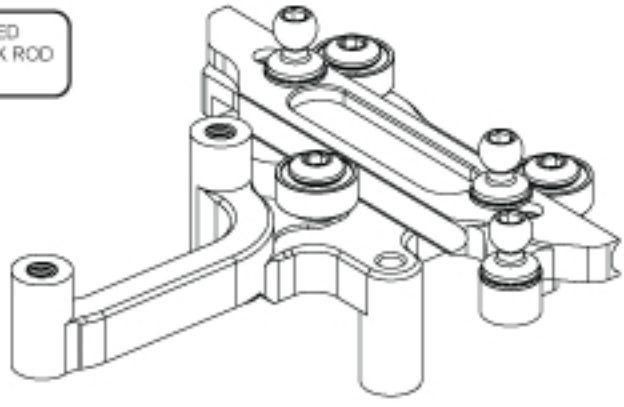

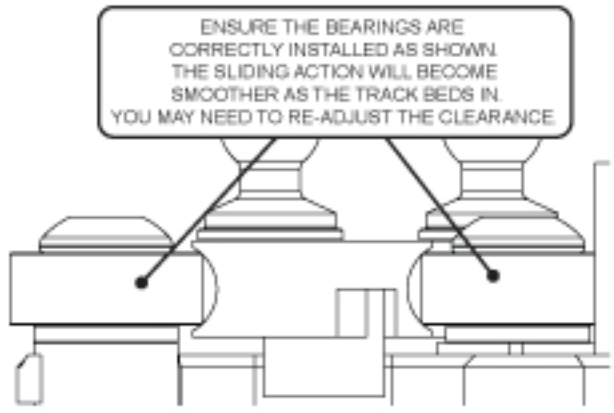

Step 13 B

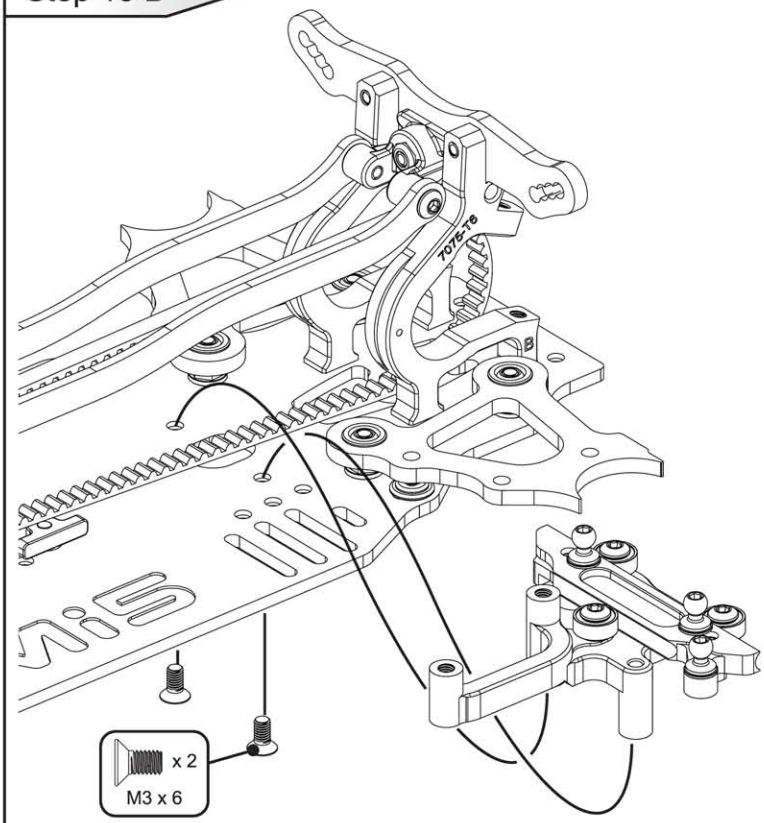

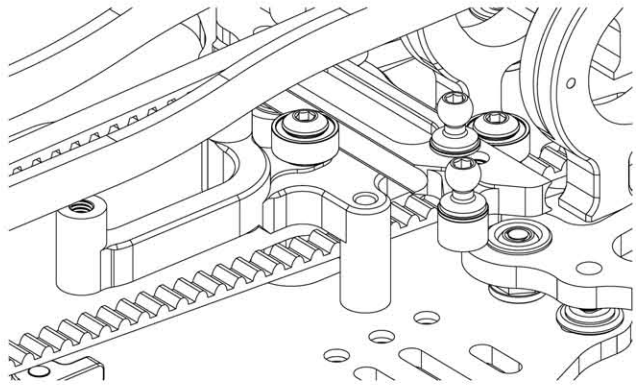

Step 14

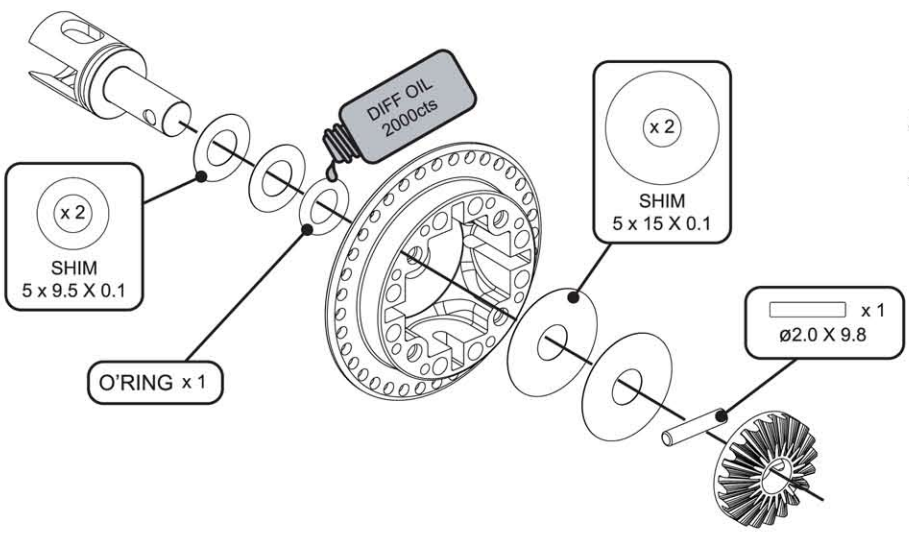

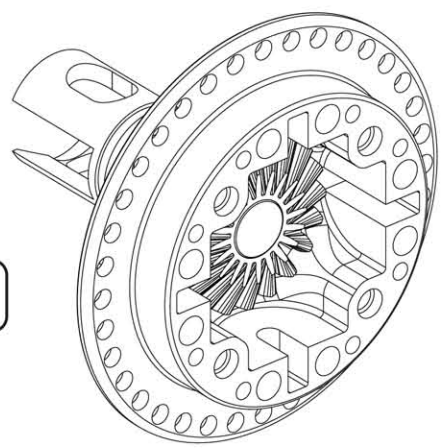

Step 15

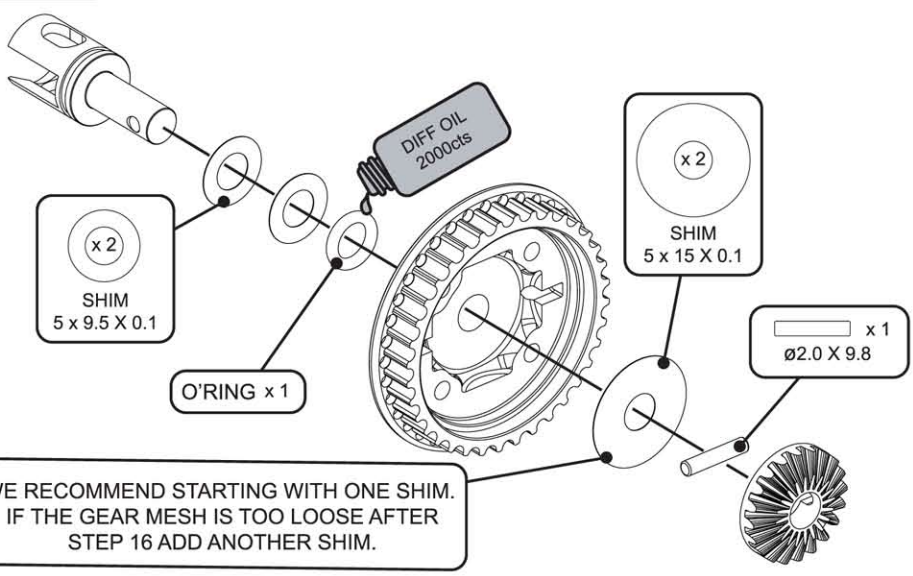

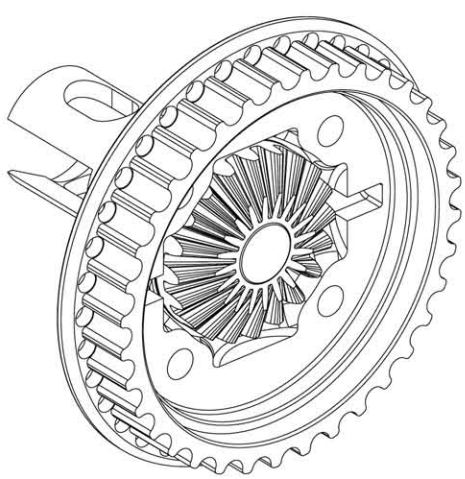

WE RECOMMEND STARTING WITH ONE SHIM.
IF THE GEAR MESH IS TOO LOOSE AFTER
STEP 16 ADD ANOTHER SHIM.

Step 16 A

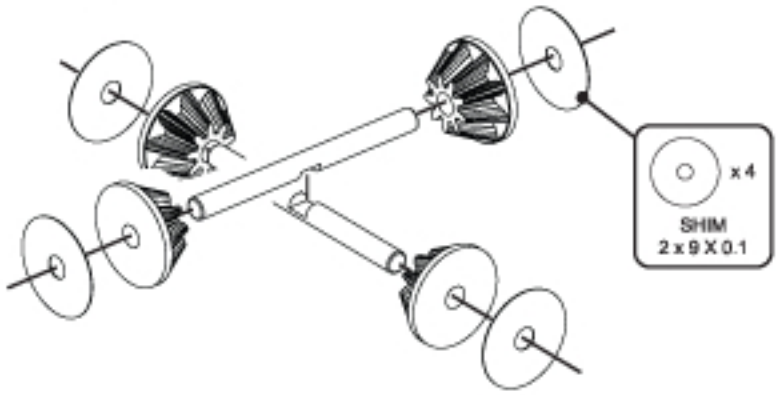



Step 16 B

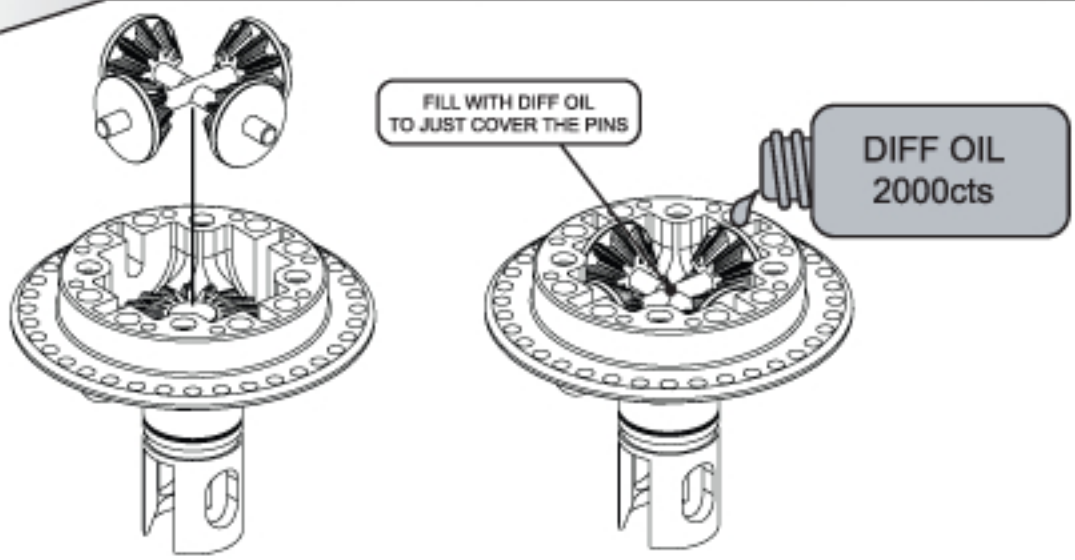

Step 16 C

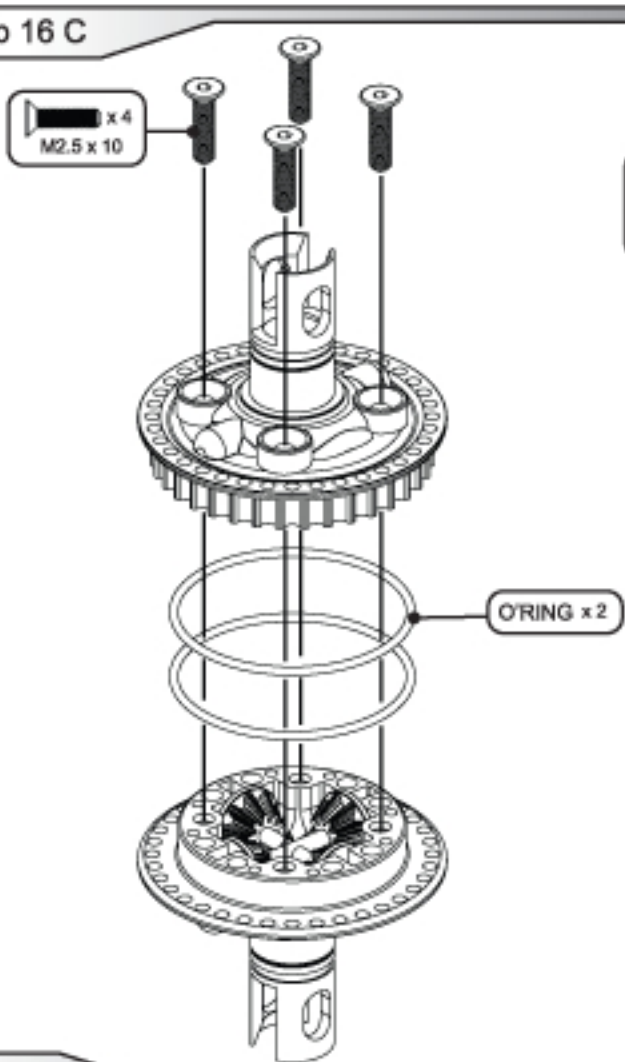

FEEL THE DIFF FOR INTERNAL GEAR MESH.
IF TOO LOOSE GO BACK TO STEP 15 AND ADD A SECOND SHIM.
IF TOO TIGHT GO BACK TO STEP 14 AND REMOVE A SHIM.

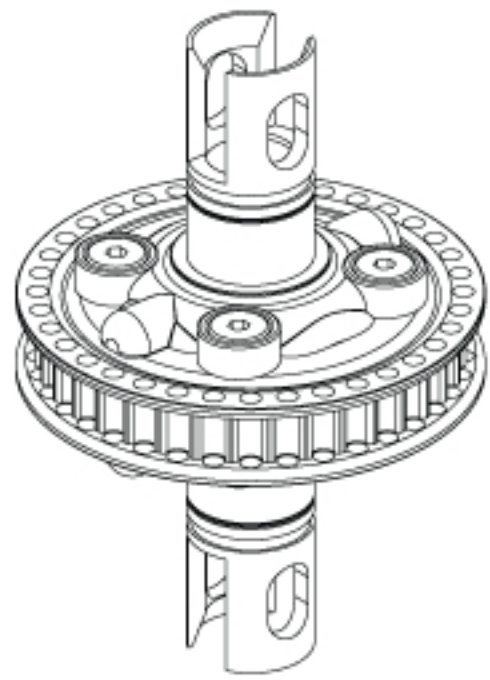

Step 17 A

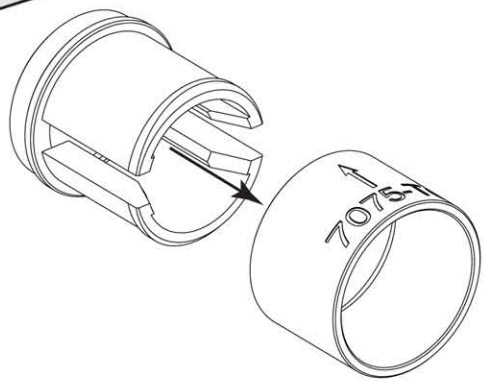



X 2

Step 17 B

1. Assemble the bearing shim, bearing and o-ring onto the output.
2. Push the bearing firmly against the oring and push the slider to touch the bearing (see Fig1)
3. With the bearing and slider firmly pressed together finish pressing the slider onto the output until the o-ring is seated correctly (see Fig2)

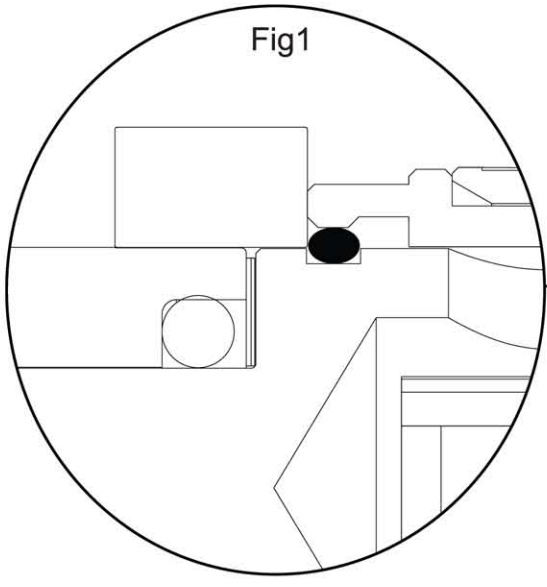

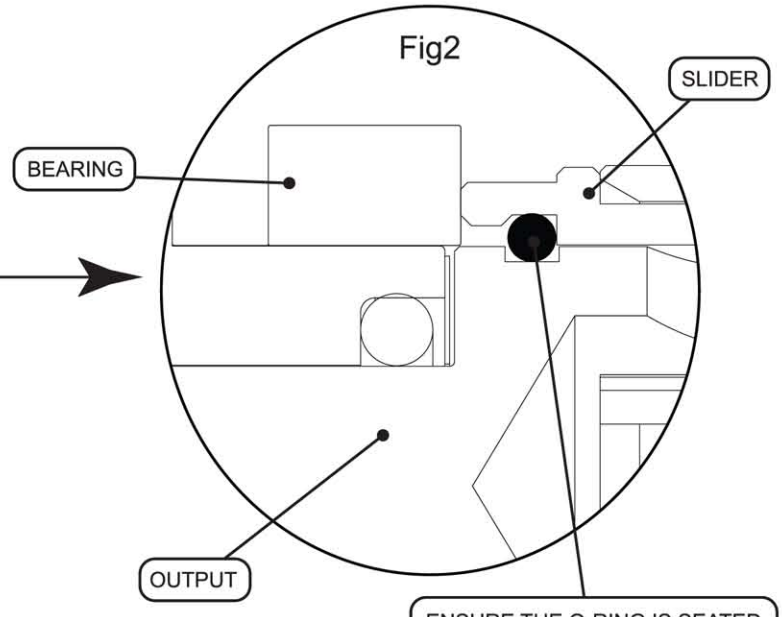

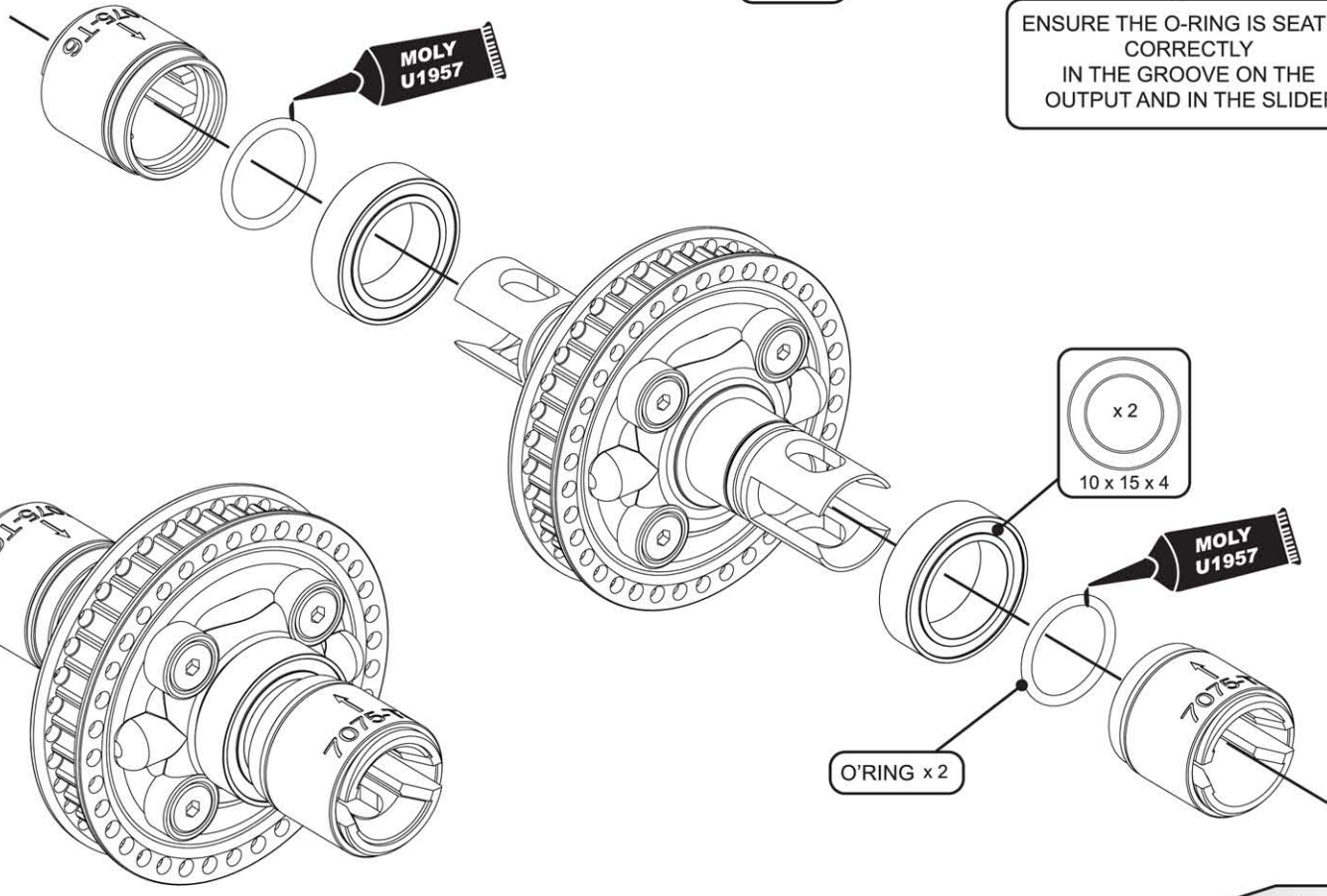

Step 18 A

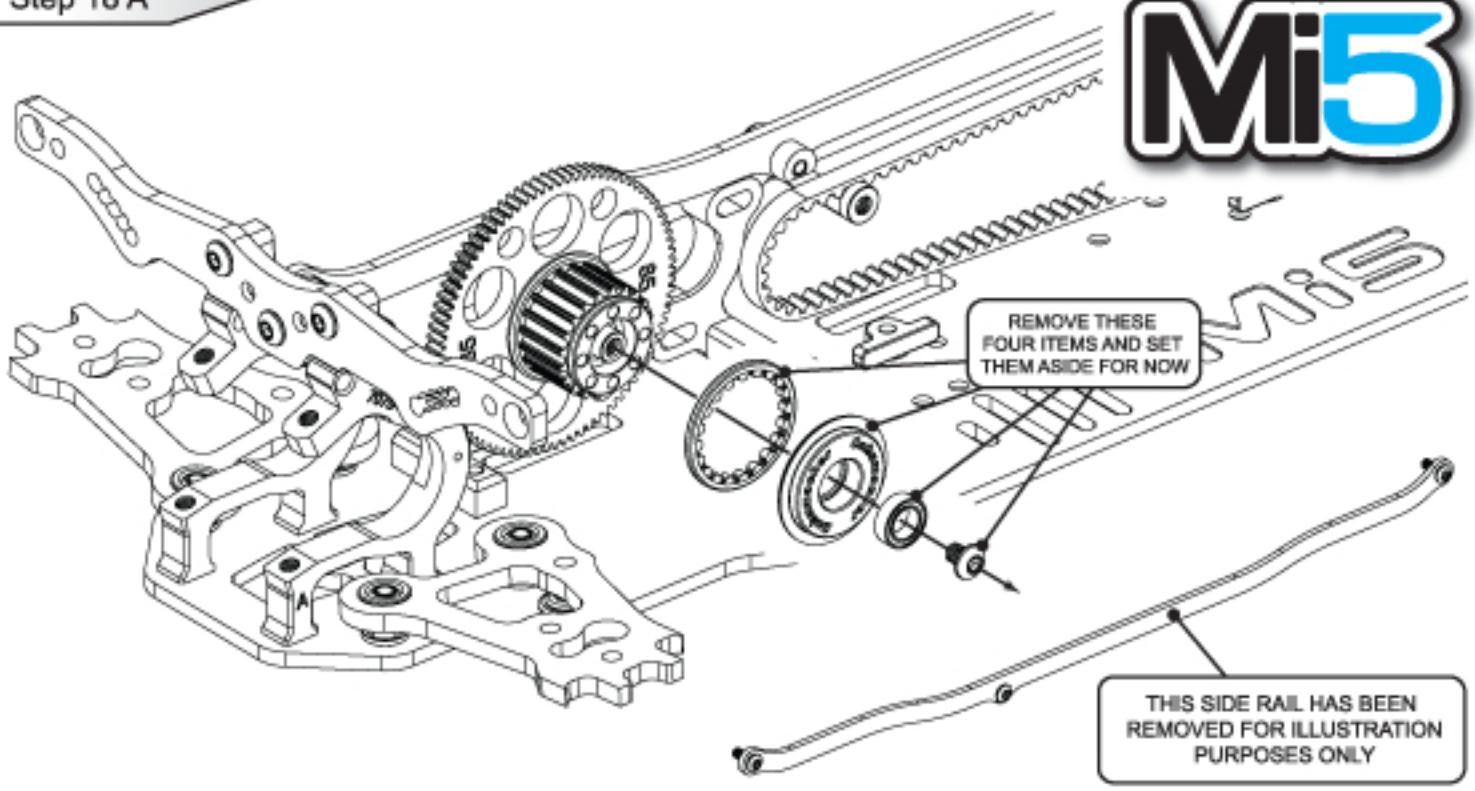

Step 18 B

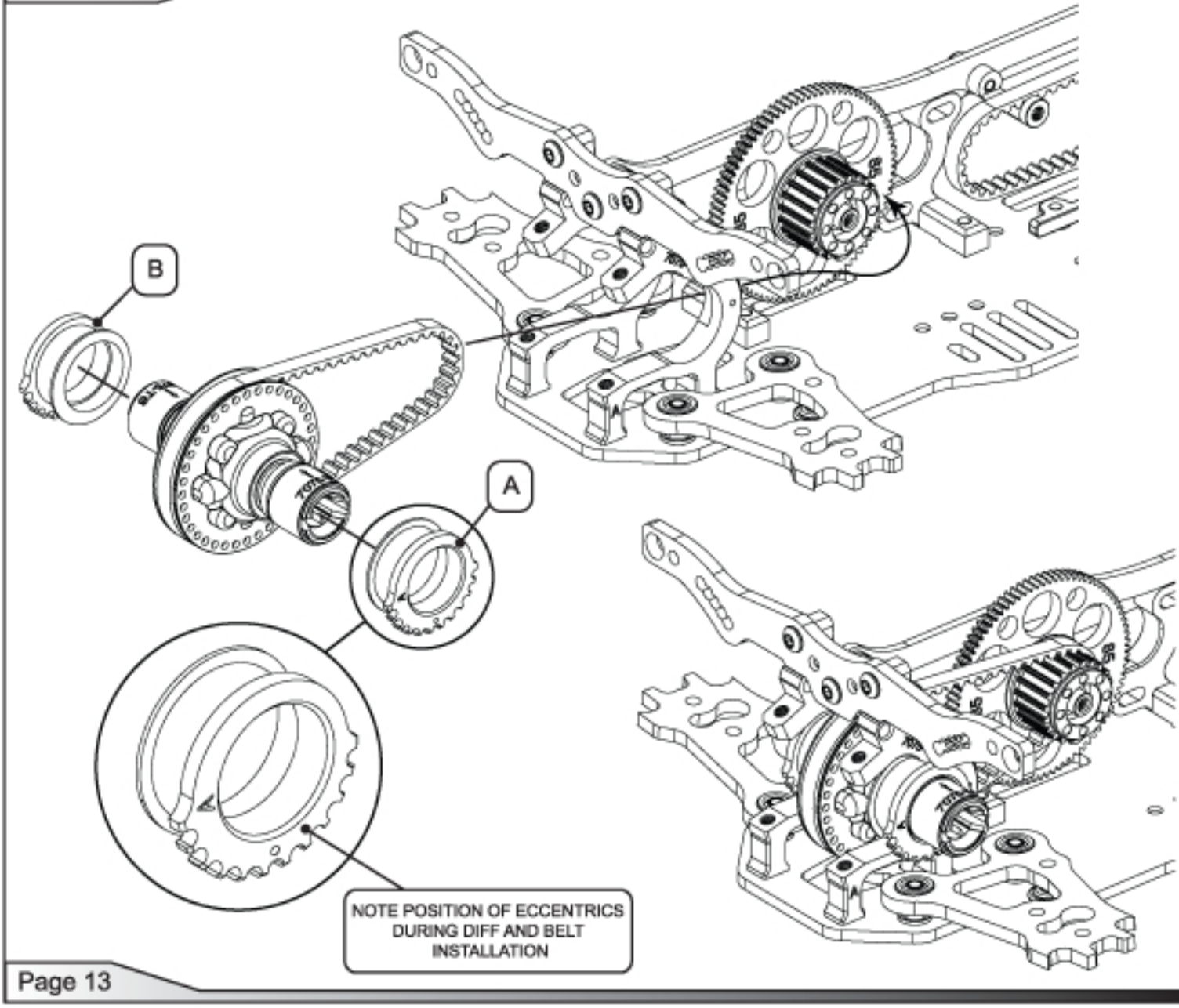

Step 18 C

DO NOT ASSEMBLE THE FRONT BELT AT THIS STAGE.

x 2
M3 x 6

NOTE POSITION OF ECCENTRICS. STARTING POSITION FOR BELT TENSION ADJUSTMENT. ECCENTRICS 'A' AND 'B' MUST BE SET THE SAME.

Step 18 D

TIGHTEN BELT TENSION

LOOSEN BELT TENSION

Step 19

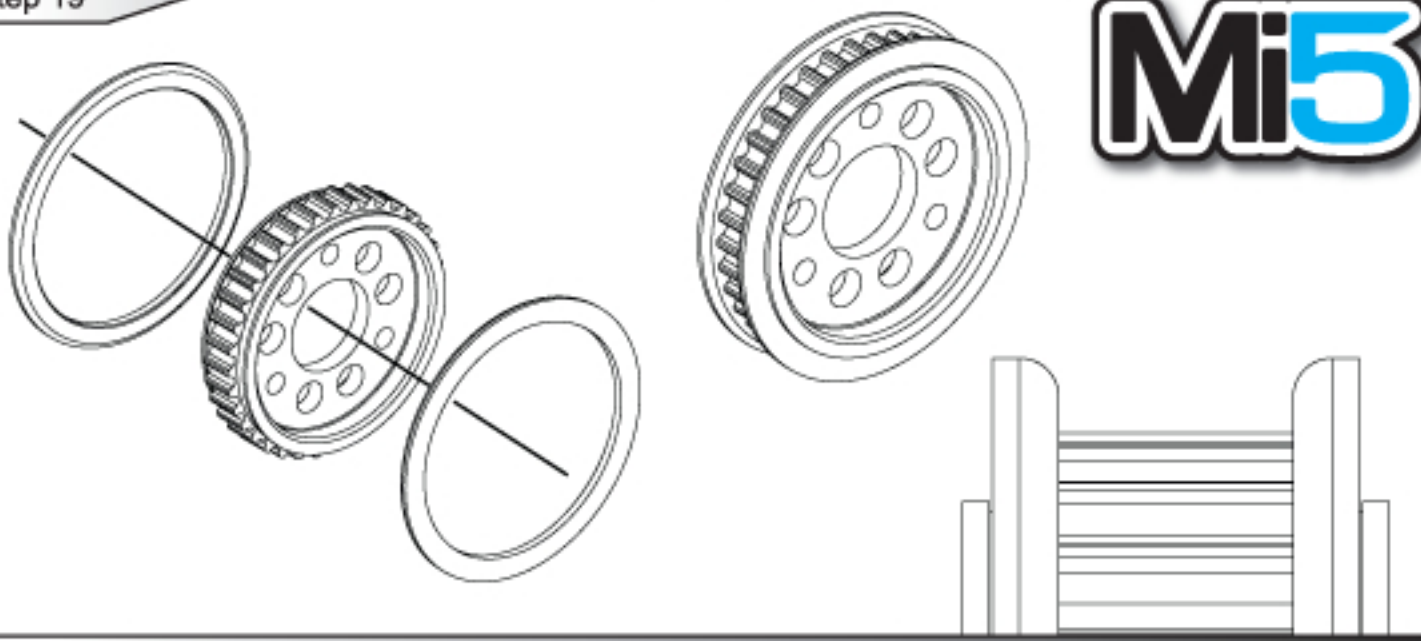

Step 20

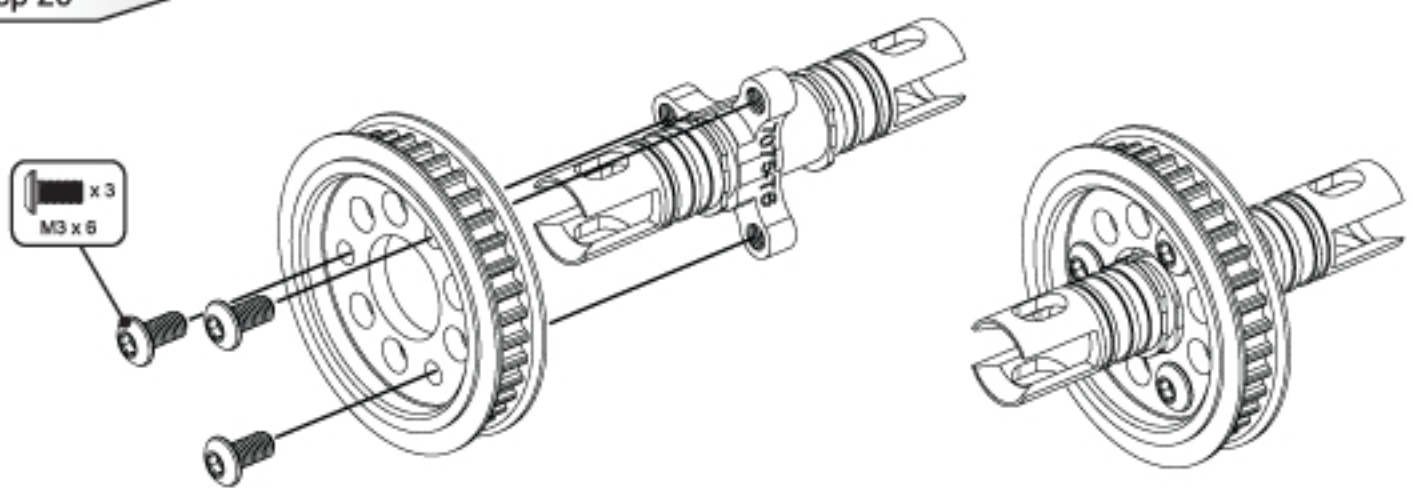

Step 21

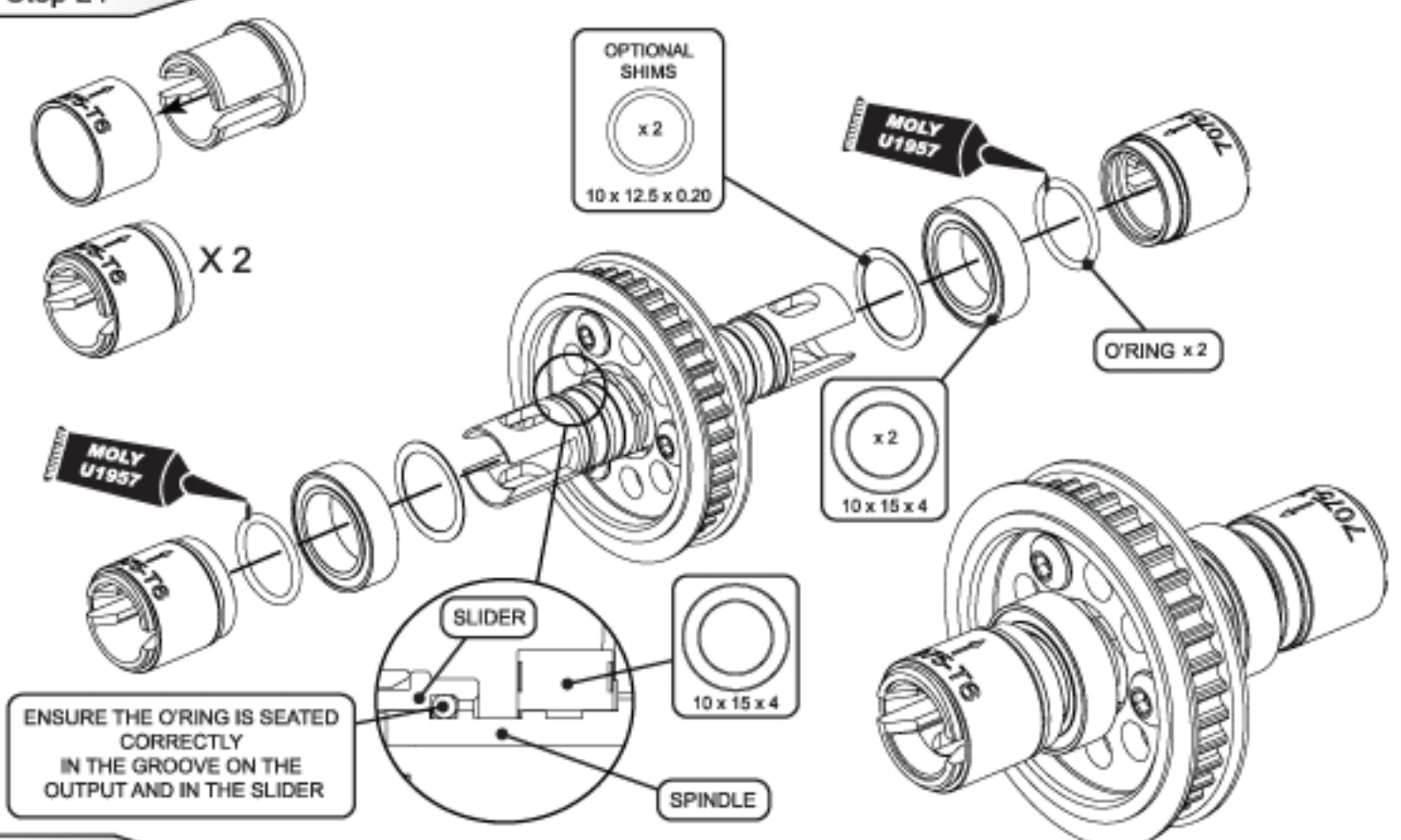

Step 22 A

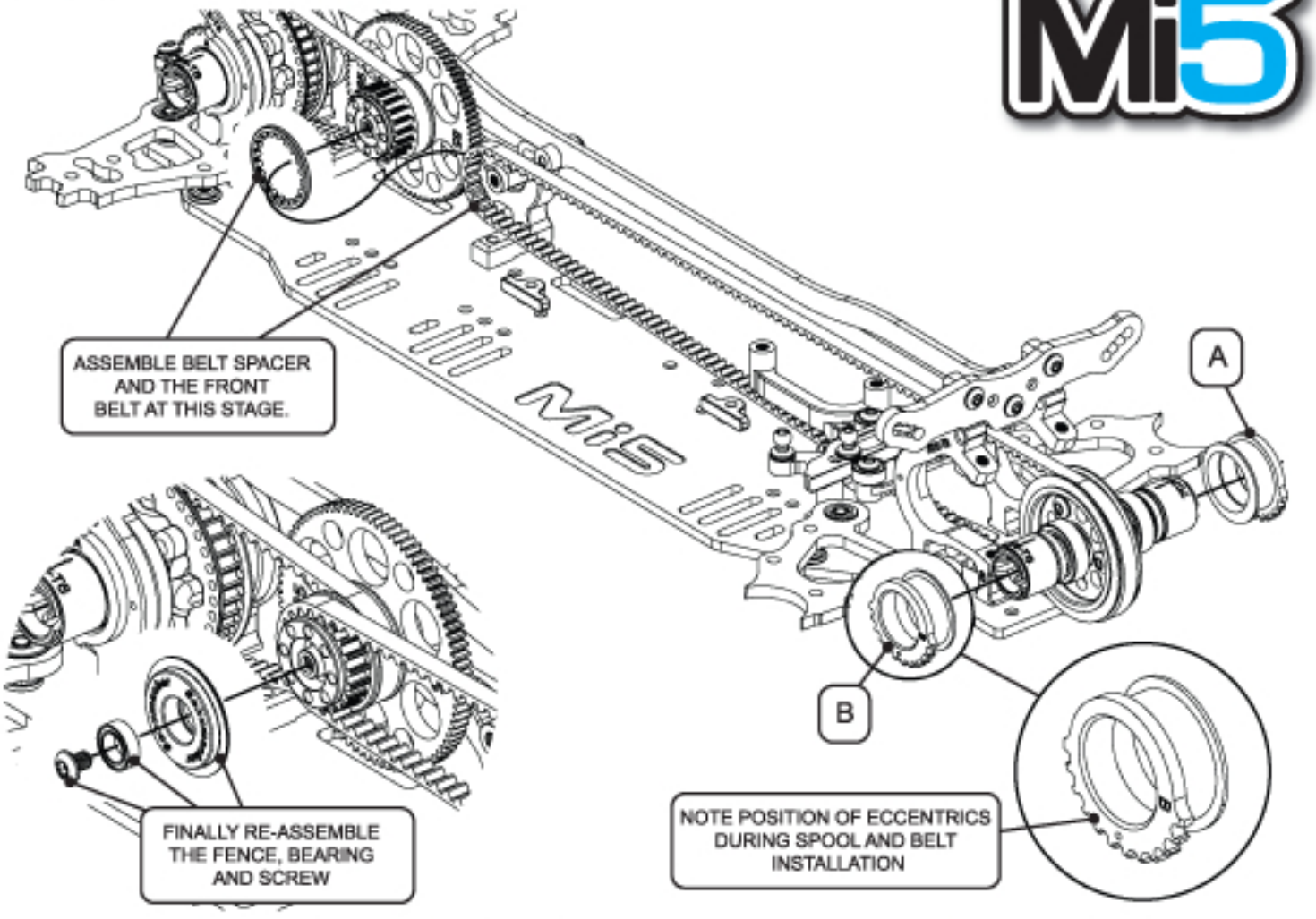

Step 22 B

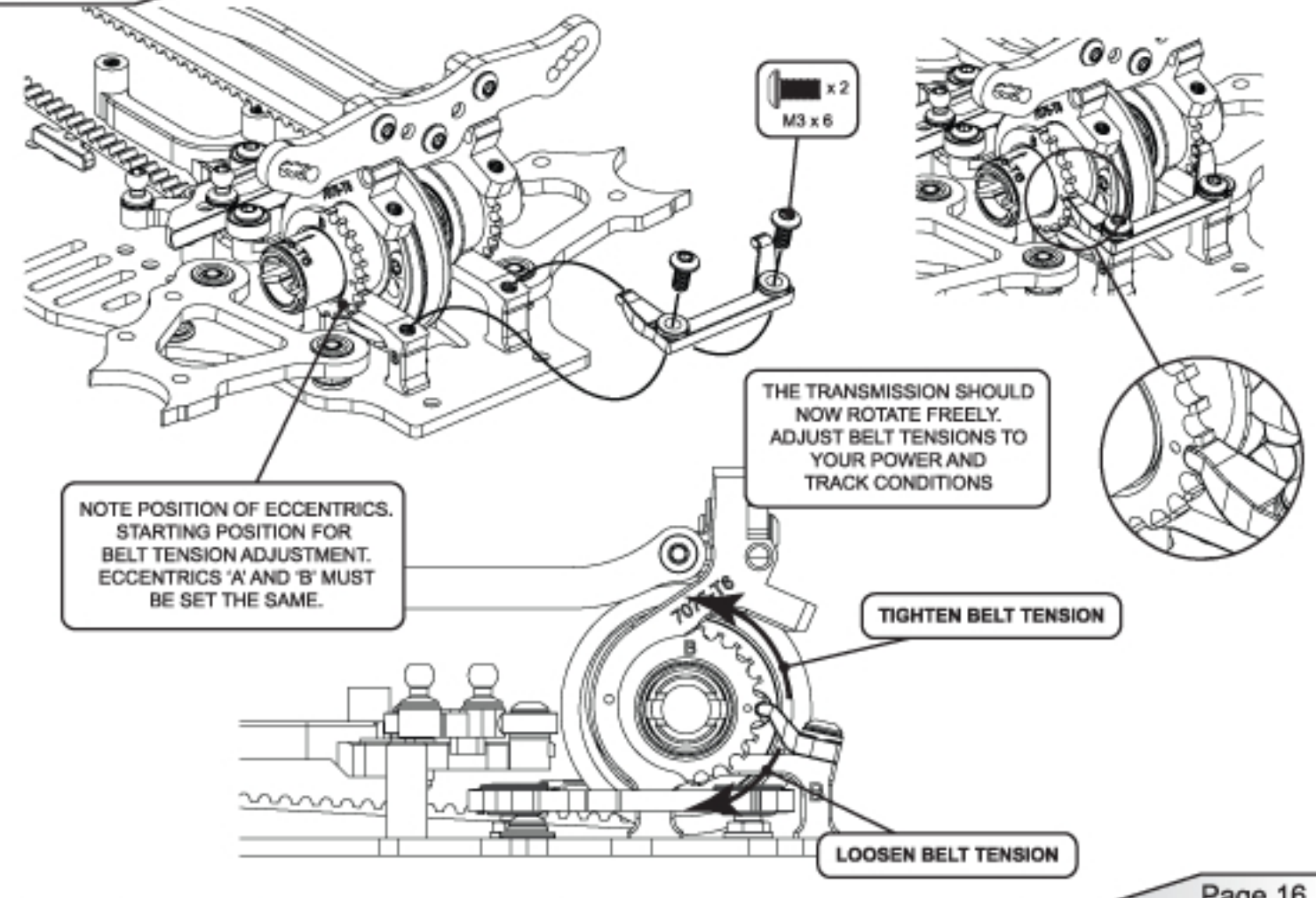

Step 23

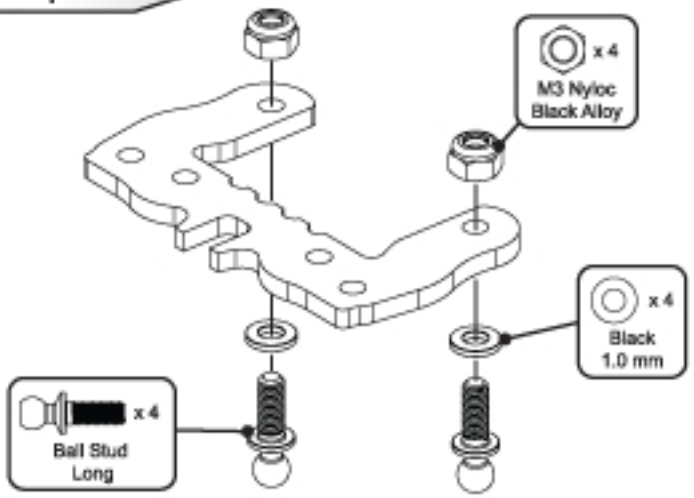

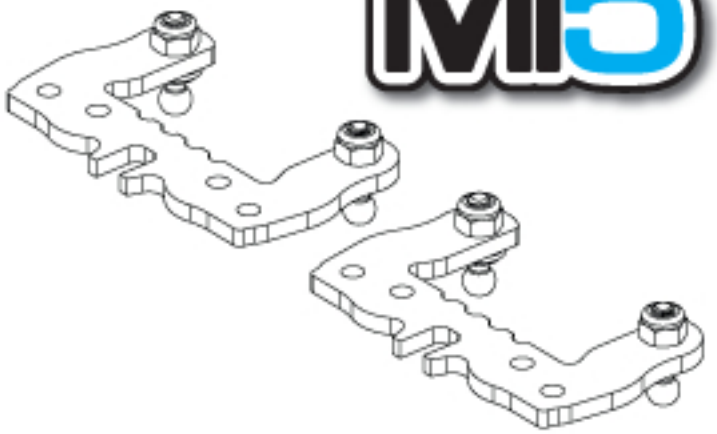

Step 24 A

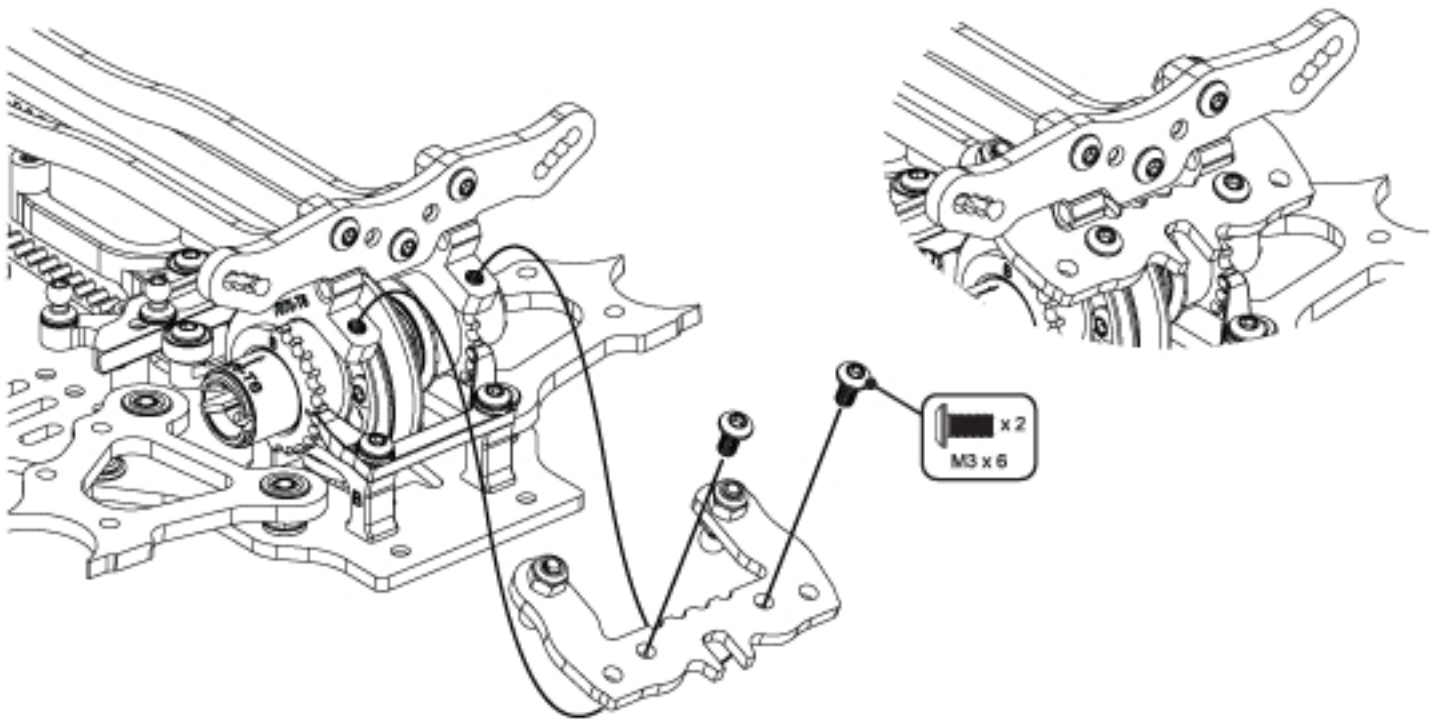

Step 24 B

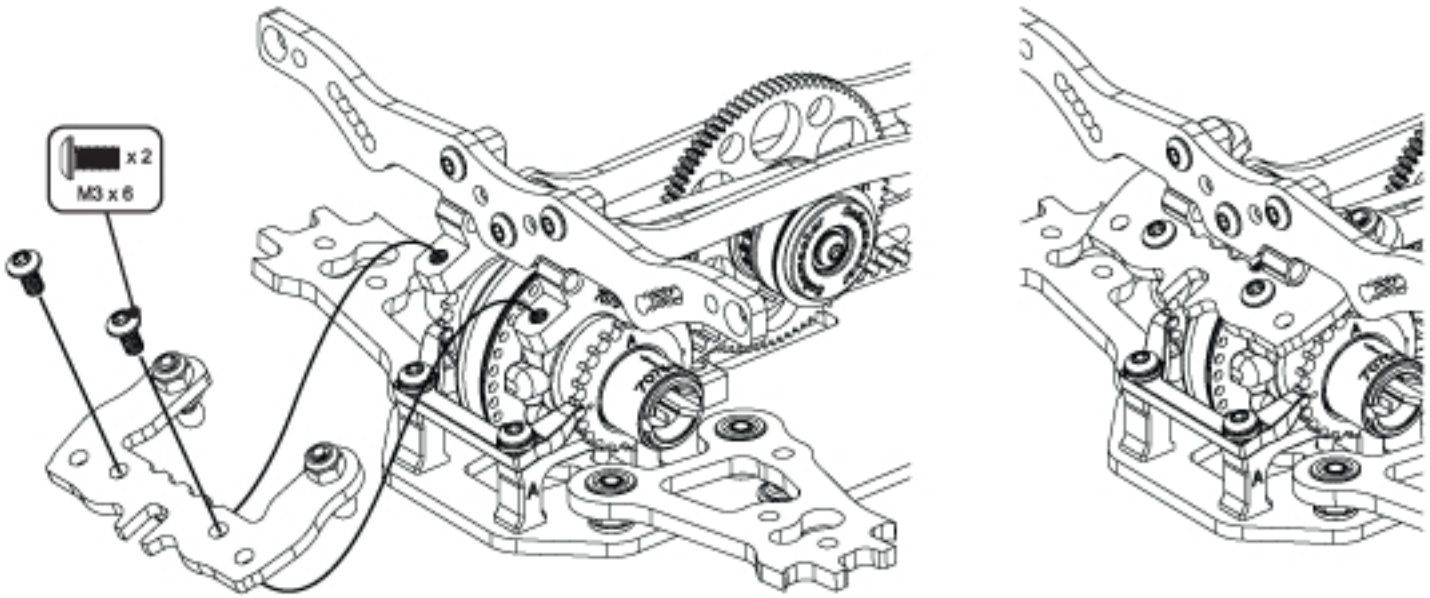

Step 25

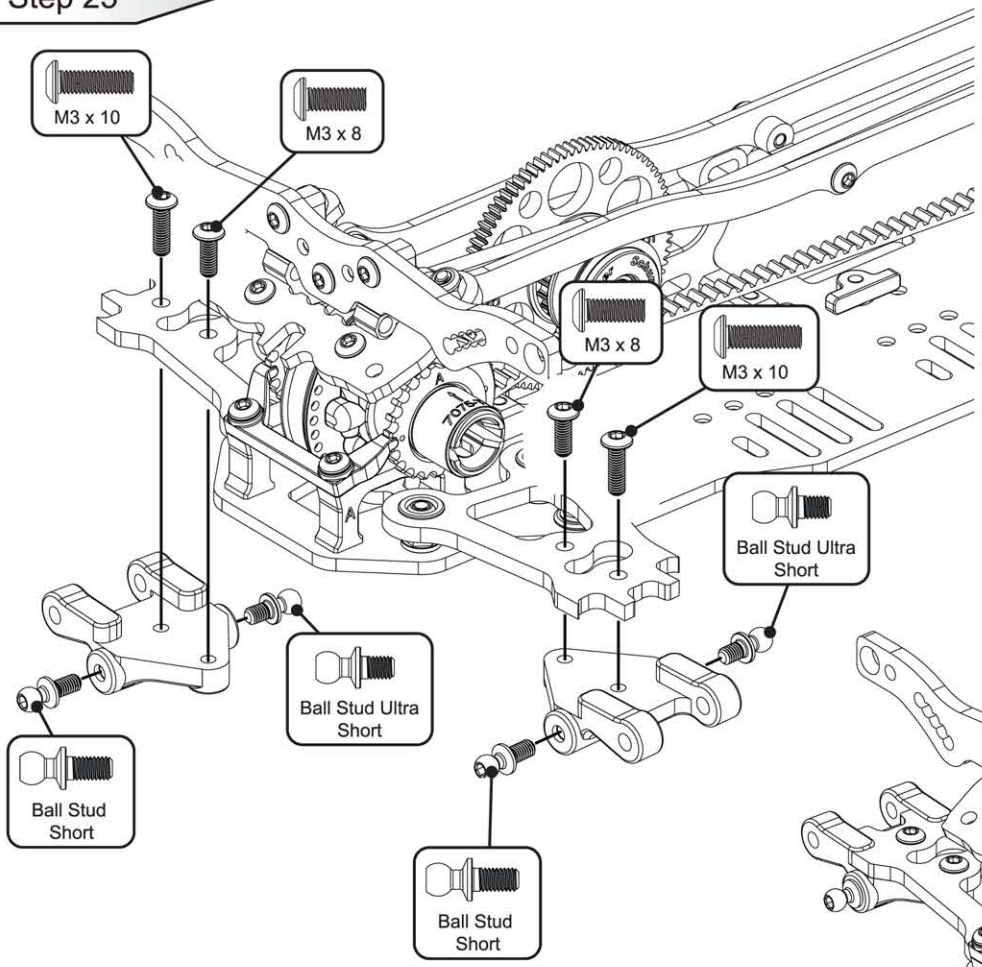

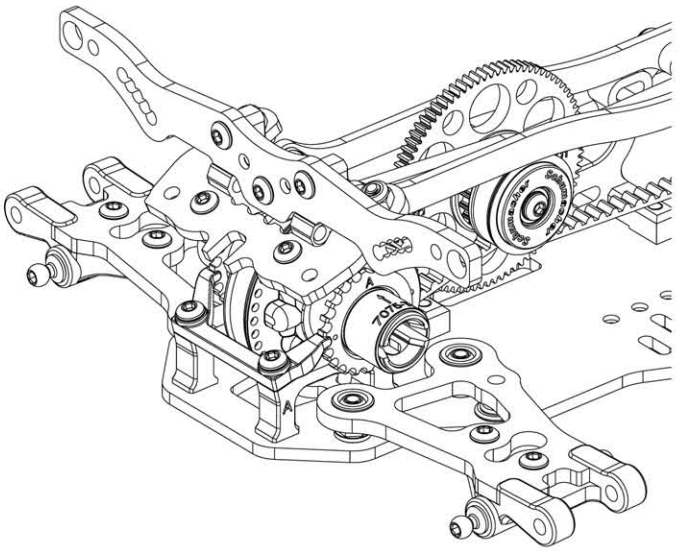

Step 26 A

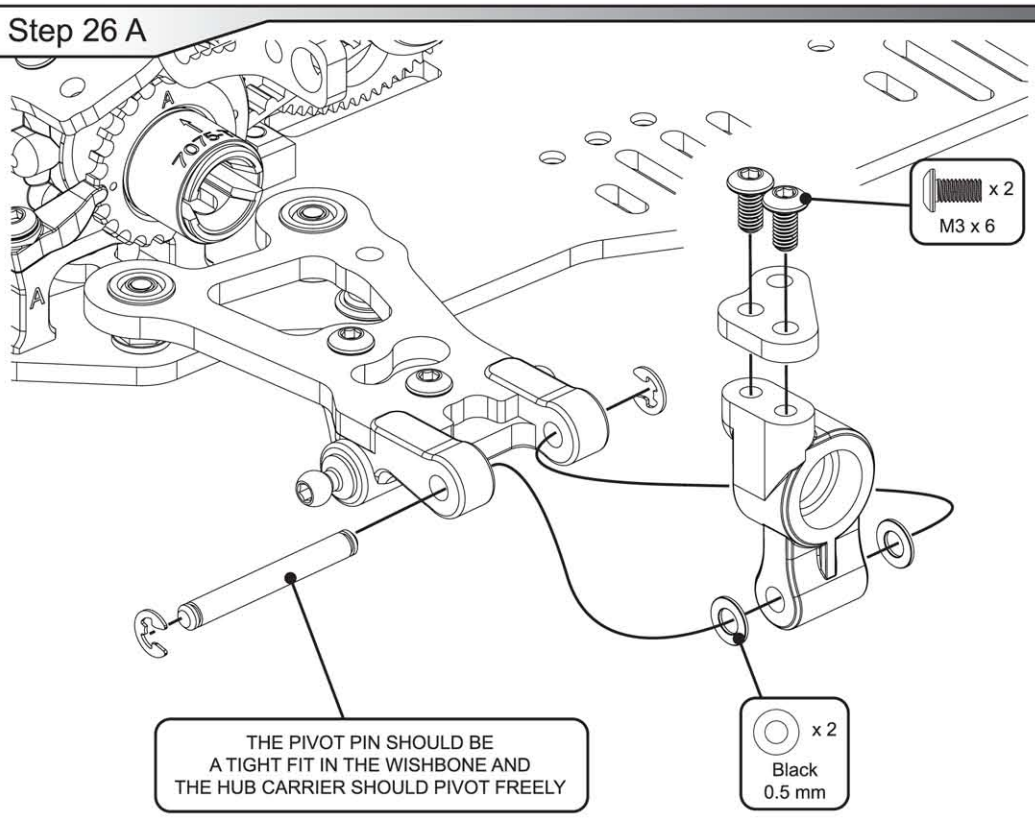

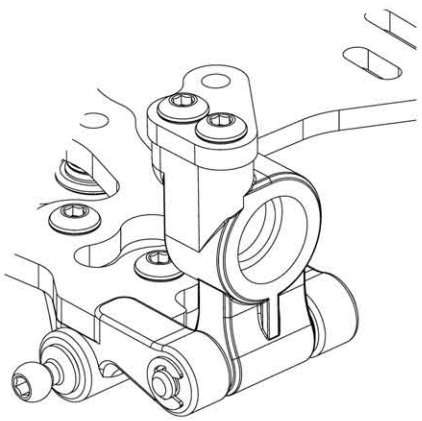

Step 26 B

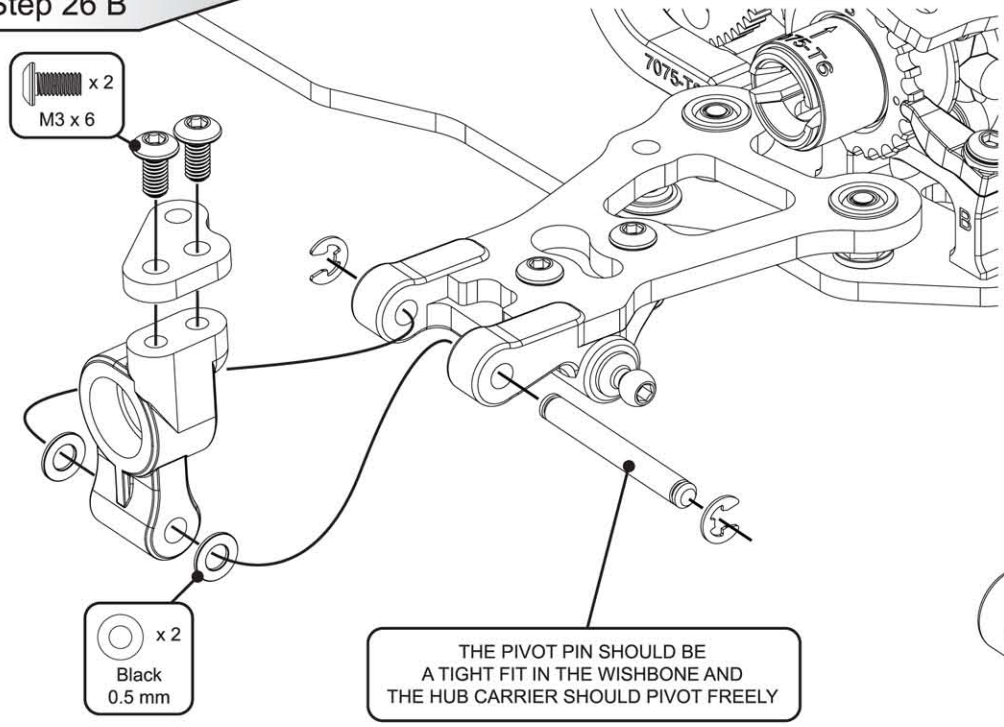

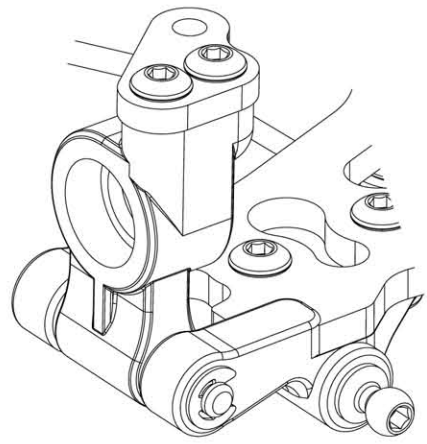

Step 27 A

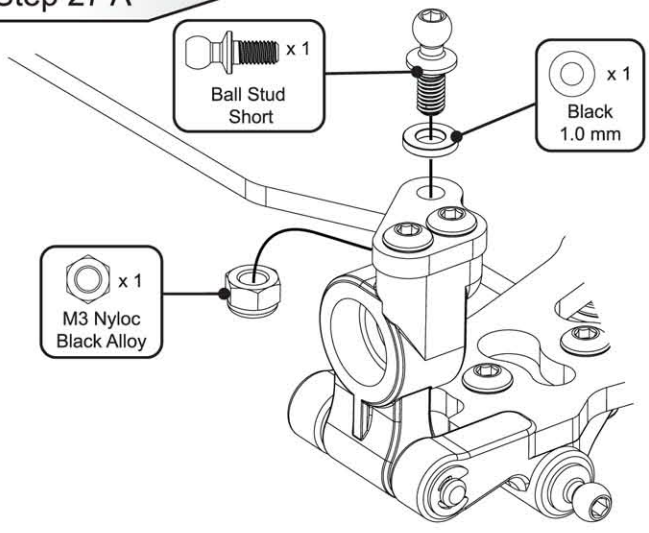

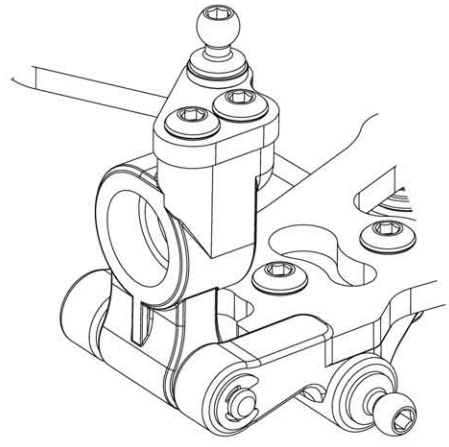

Step 27 B

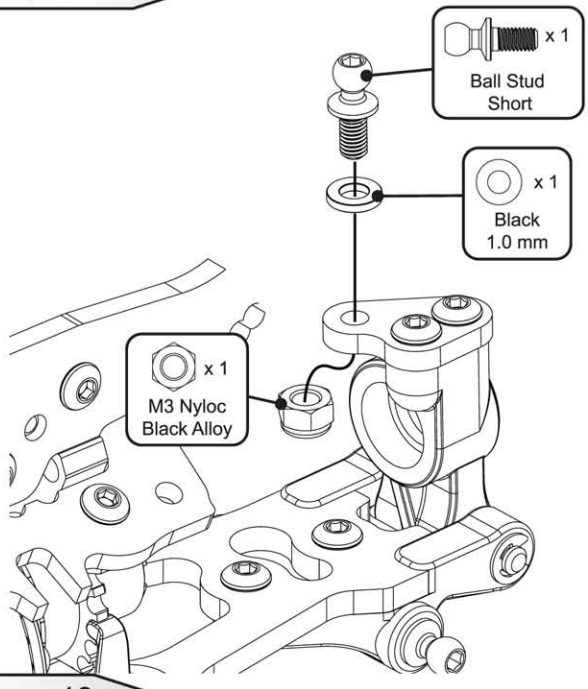

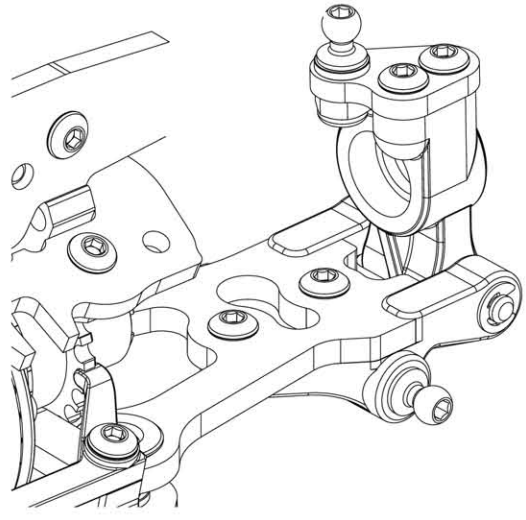

Step 28 A

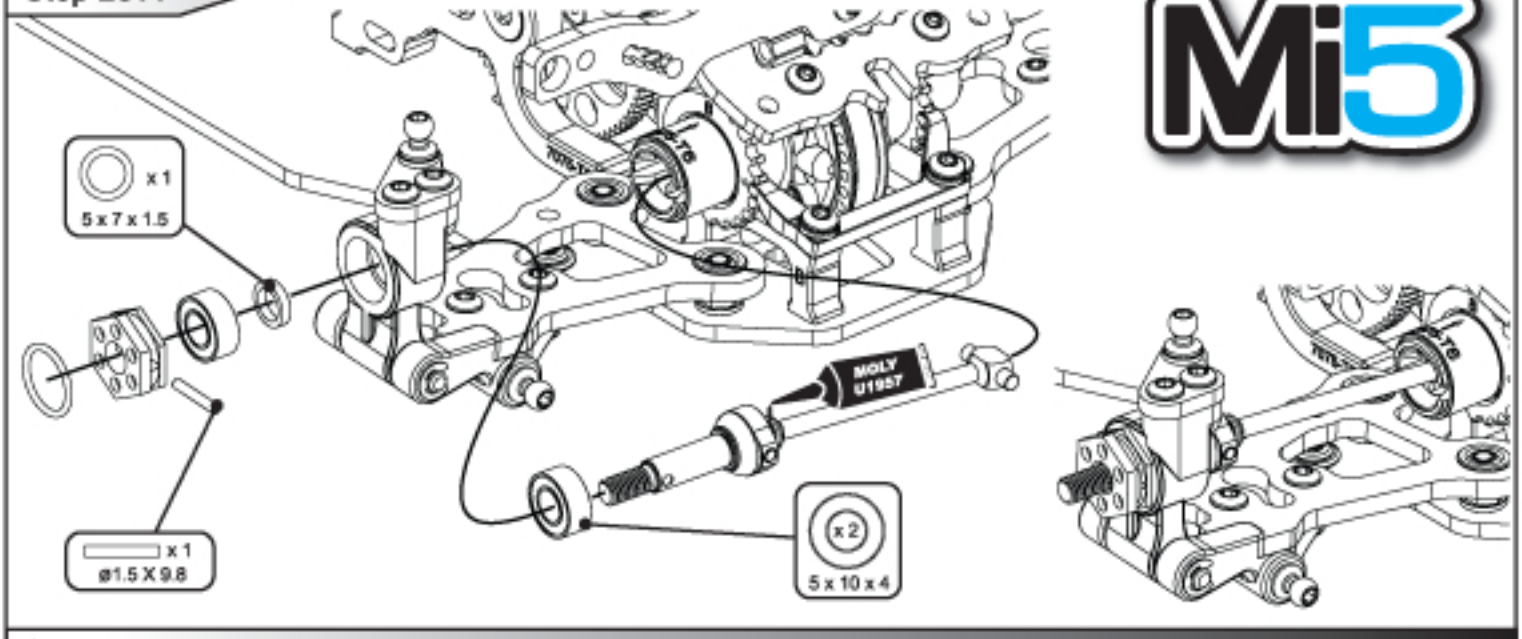

Step 28 B

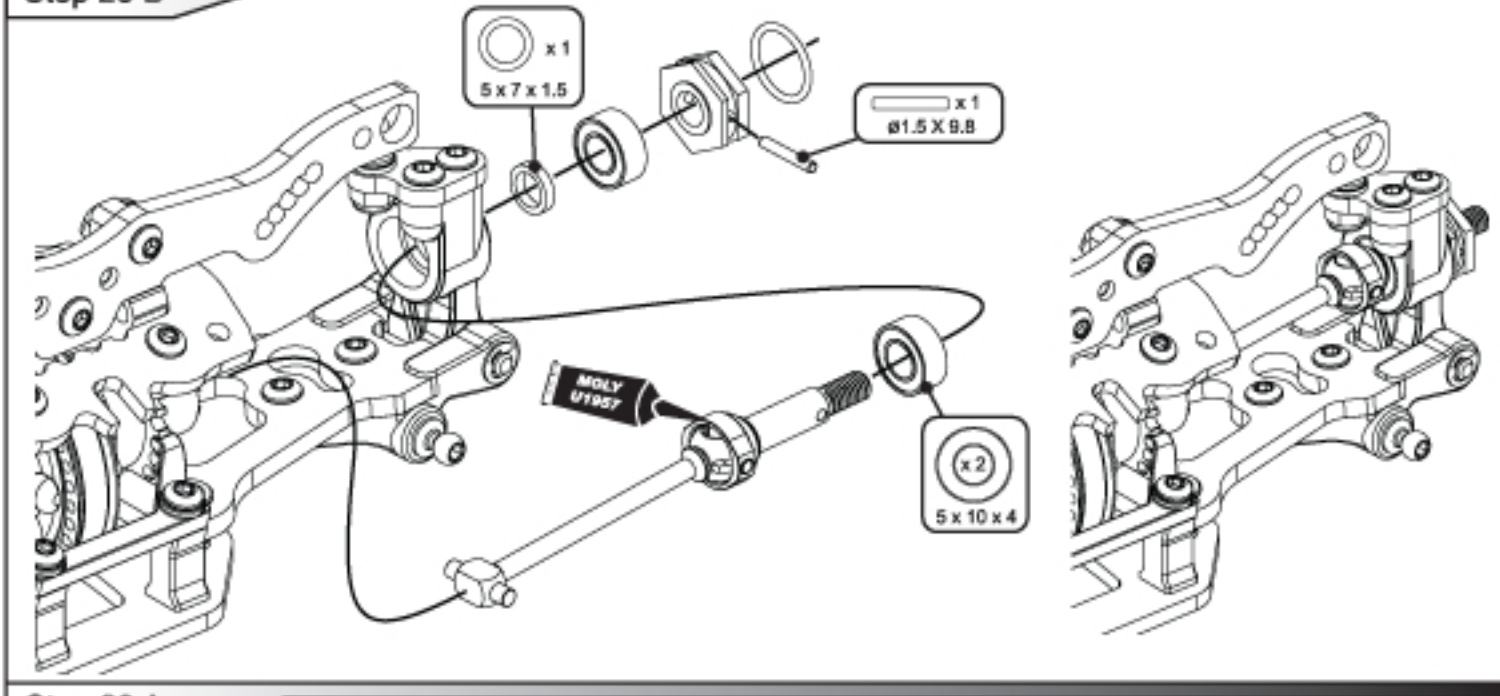

Step 29 A

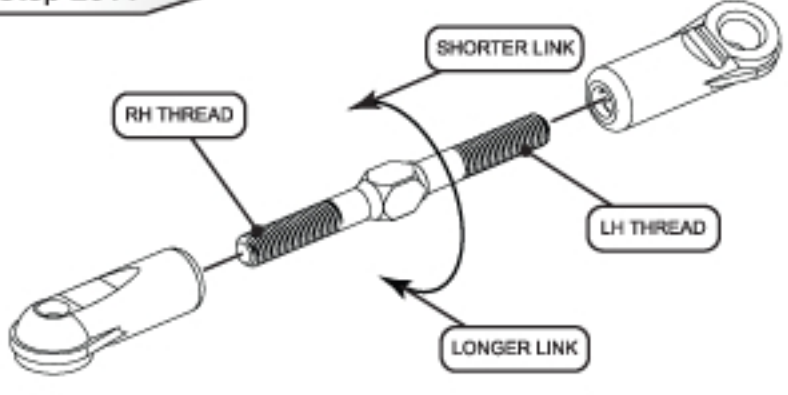

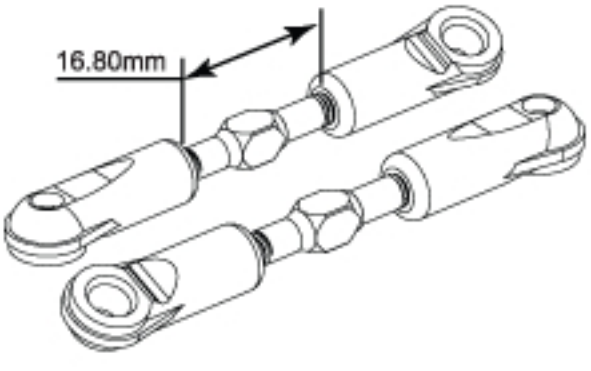

CAREFULLY SCREW THE SOCKETS ON TO THE TURNBUCKLE UNTIL NO THREADS ARE VISIBLE. THEN UNDO THEM TO THE DESIRED LENGTH. THIS ALLOWS FOR EASIER ADJUSTMENT ON THE CAR. (GREASING THE THREADS WILL ALSO HELP)

NOTE THE SHAPE OF THE TURNBUCKLE THIS SIDE OF THE TURNBUCKLE IS THE LEFT HAND THREAD.



Step 29 B

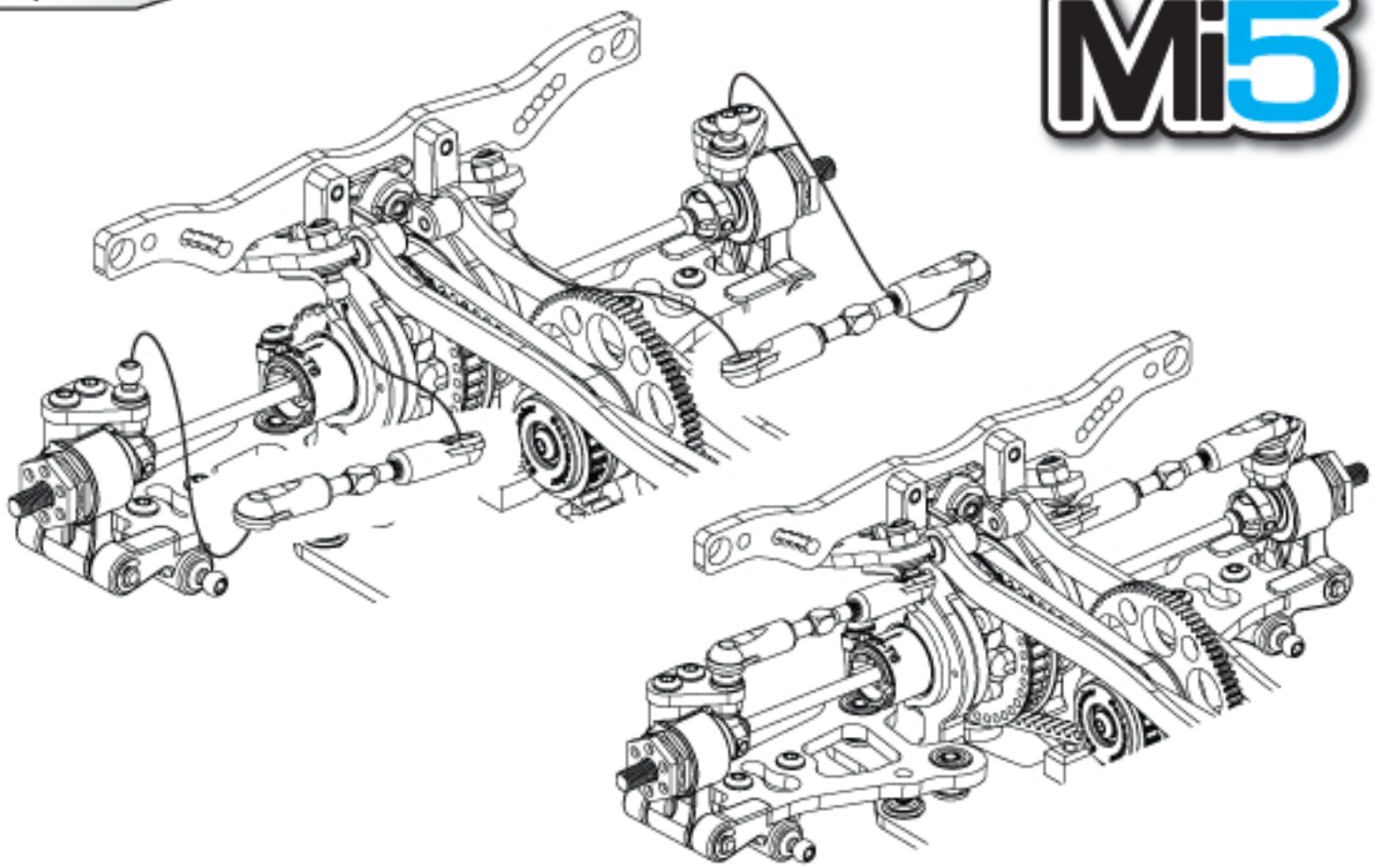

Step 30

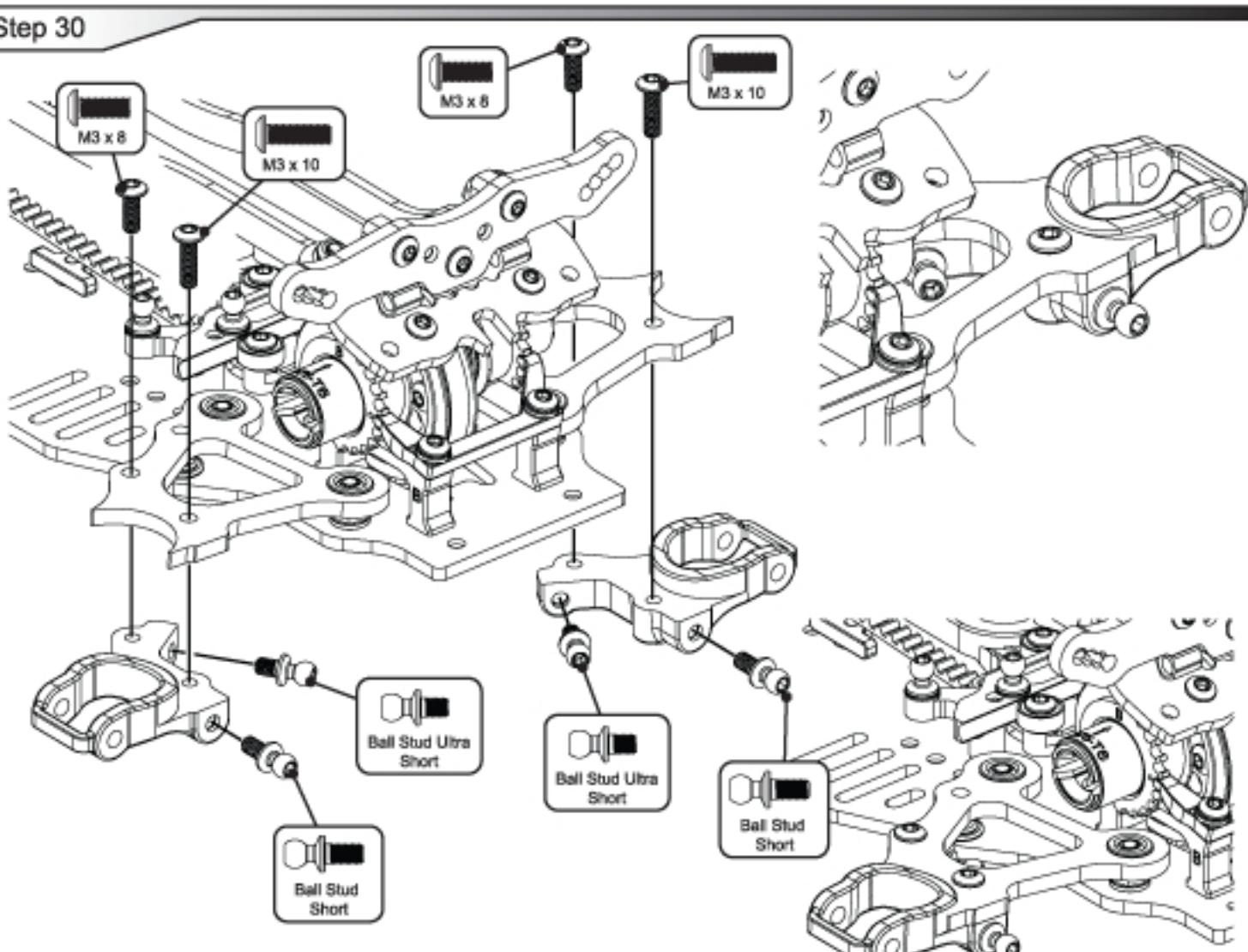

Step 31 A

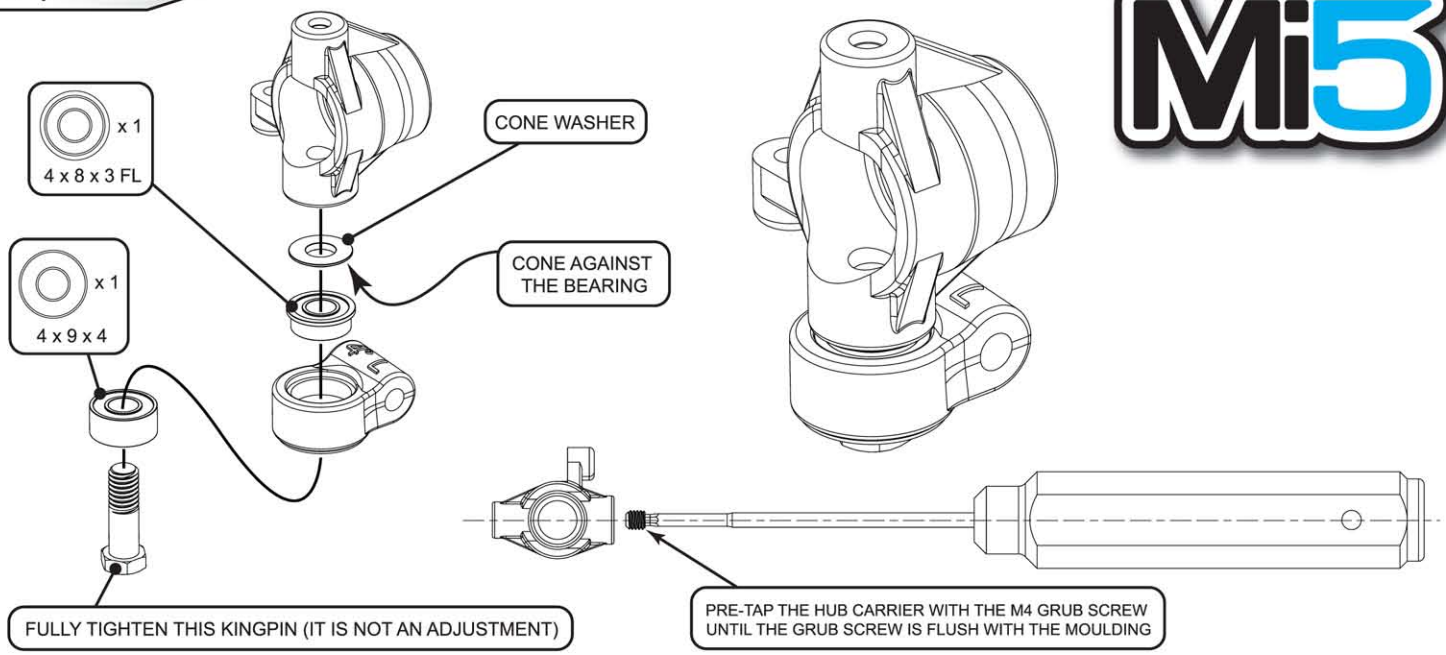

Step 31 B

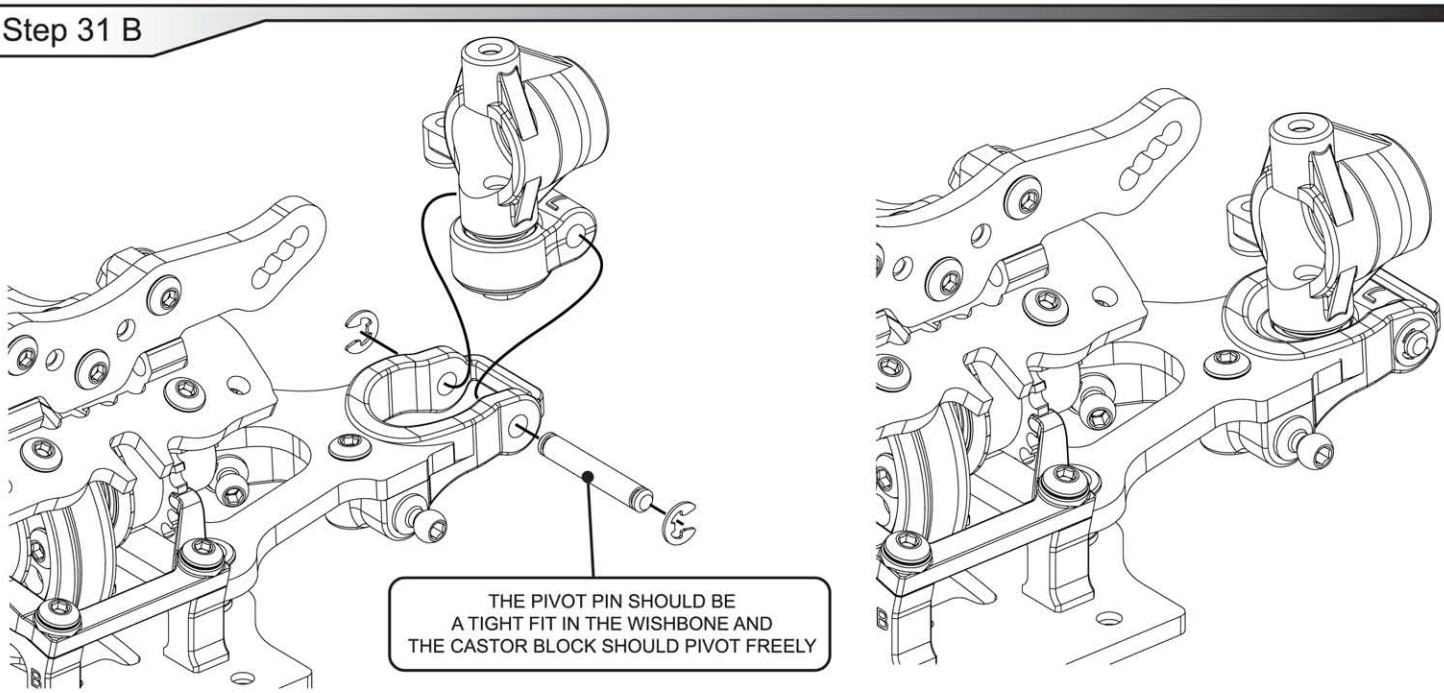

Step 32 A

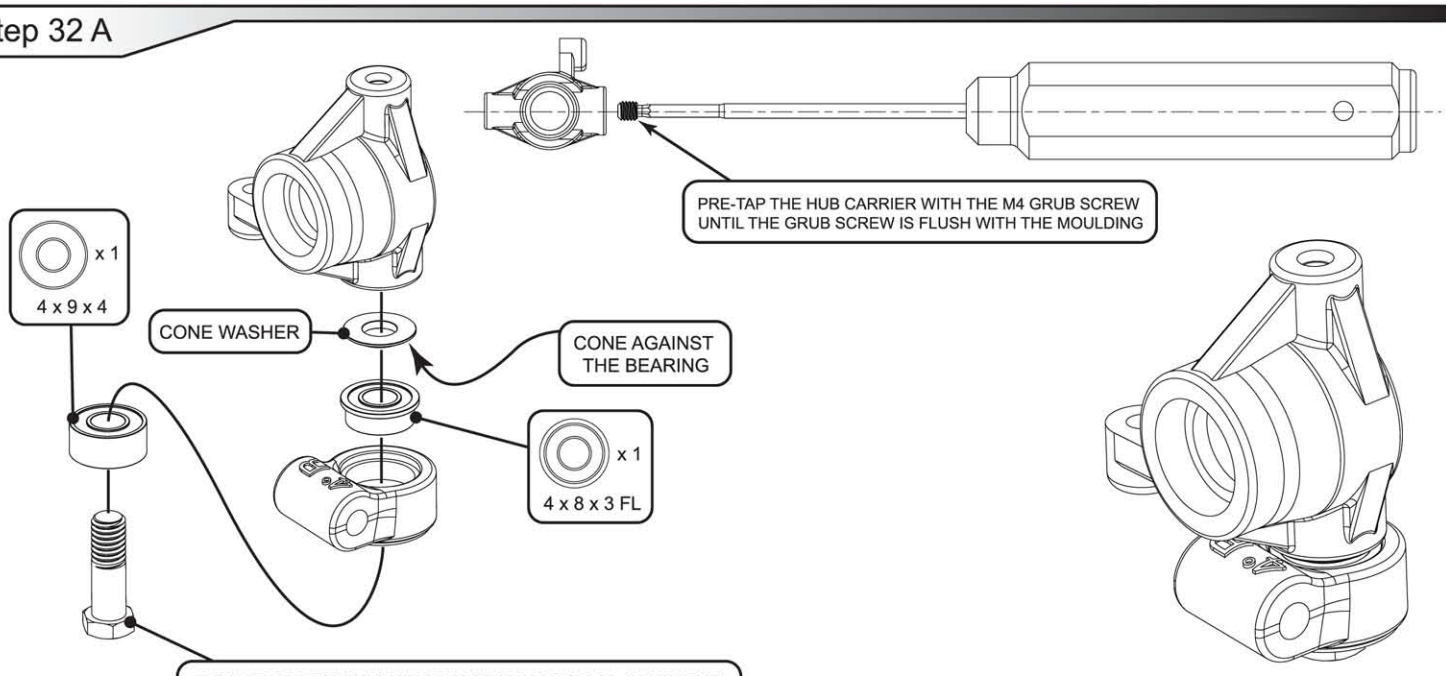

ELECTRIC - TOURING CARS

K137 Mi5 - Pro C/F - 1/10 EP Touring Kit
K138 Mi5 - Pro C/F - 1/10 EP Touring Assembled

CHASSIS PARTS

U1042 Aerial Mount - Universal
U119 Aerial Tube - Pack 4
U2231 Servo Horns
U2480 Body Posts and R Clips (pk 4)
U4137 Servo Mounts - CAT K1
U4245 Bumper Mouldings - Mi5
U4251 Topdeck Mouldings - Mi5 - pk2
U4252 LiPo Stop Mouldings - Mi5
U4268 Centre Track Rod - Mi5
U4269 Steering Mount - Mi5
U4281 Steering Post - Mi5 - pk2
U4282 Topdeck Spacer - Mi5
U4283 Foam Bumper - Mi5
U4286 C/F Chassis - Mi5
U4287 C/F Front Shock Mount - Mi5
U4288 C/F Rear Shock Mount - Mi5
U4289 C/F Rear Motor Topdeck - Mi5
U4293 C/F Steering Arm & Rear Hub Arm (kit) - Mi5 - 2pr
U4294 C/F Servo Mount (Kit) - Mi5
U4312 Body Block Rear (Black) - Mi5 - 1pr
U4313 Body Block Front (Black) - Mi5 - 1pr
U4319 Manual - Mi5

BODYSHELLS AND DECALS

EC13810BSI East Coast Rear Body Supports
EC13810W1A East Coast Side Body Supports
EC13810W1B East Coast Body Stiffeners 5pcs
EC16283121 East Coast - Body; is250 190mm
EC16283122 East Coast - Body; Euro-R 190mm
EC16283123 East Coast - Body; 320si 190mm
EC16283129 East Coast - Body; Evo9x 190mm
EC16283212 East Coast - Body; Euro-R 200mm
EC162832D6 East Coast - Body; 350Z 190mm
EC162832D8 East Coast - Body; RX7 190mm
EC162832D9 East Coast - Body; S15 190mm
EC168M609 East Coast Body; 2009 M-Speed 6 - 190mm
EC168M609L ECLight Body; 2009 M-Speed 6 - 190mm
EC38826B East Coast - Half Paint; Blue; Speed 6 190mm
EC38826R East Coast - Half Paint; Red; Speed 6 190mm
G887 Touring Wing Holder
MR-WING MR33 Touring Wing
MT011002 Montech - Nazda 3 Body Touring - 190mm
MT012012 Montech - Nazda 4 Body Touring - 190mm
U3478 Decal sheet - Schumacher and Racing-Cars.Com (pk3)
U4320 Decal Sheet - Mi5 - (pk3)

SUSPENSION

U1440 Pro Pin; grooved 1/8x25mm (pr)
U2718 Pro Pin; Grooved 1/8x18mm (pr)
U3131 Alloy Spacers M3x7mm 0.5;1;2mm (pk18)
U3137 Shock Mounting Post - (pr)
U3933 Roll Bar Collar Set
U4242 Roll Bar Socket - Mi5 - pk4
U4243 Droop Screw Bush - Mi5 - pk4
U4246 Front Wishbone Mouldings - Mi5 - 1pr

SUSPENSION CONT....

U4247 Rear Wishbone Mouldings - Mi5 - 1pr
U4254 Pro Ball Sockets - Mi5 - pk8
U4255 Rear Hub Carriers - Mi5 - 1pr
U4256 Front Hub Carriers - Mi5 - 1pr
U4257 Front Yokes 4deg - Mi5 - 1pr
U4259 Roll Bar Clamps - Mi5 - pk4
U4270 King Pin & Spacer - Mi5 - pk2
U4273 Pro Ball Stud Ultra Short - Mi5 - pk4
U4274 Pro Ball Stud Short - Mi5 - pk4
U4275 Pro Ball Stud Long - Mi5 - pk4
U4276 Roll Bar Link - Mi5 - pk2
U4297 Turnbuckle HT - Touring 30mm - 1pr
U4298 Turnbuckle HT - Touring 35mm - 1pr
U4299 Turnbuckle HT - Touring 52mm - 1pr
U4302 Short Ball Socket (Black) - Mi5 - pk8
U4303 Ball Socket (Black) - Mi5 - pk8
U4310 C/F Link Mount (4Dink) - Mi5 - 1pc
U4353 C/F Front Wishbone LH - Mi5 - 1pc
U4355 C/F Rear Wishbone 3.0deg LH - Mi5 - 1pc
U4357 C/F Front Wishbone RH - Mi5 - 1pc
U4359 C/F Rear Wishbone 3.0deg RH - Mi5 - 1pc

TRANSMISSION

U2761 Diff Shims; 10x12 (pk8)
U3160 85T 48DP CNC Spur Gear - Mi4
U3170 Pins and Shims; Axle - Mi4 4pr
U3510 CNC Spool Pulley only - Mi4LP
U3525 Alloy Wheel Hex - Mi4 (pr)
U3814 Slider Insert - Mi4CX (pk 8)
U3815 Slider Ring - Mi4CX (pr)
U3824 Driveshaft; Steel Rear - Mi4CX (pr)
U3834 Driveshaft; Pivot;Pin;Screw - Mi4CX 1pc
U3836 Driveshaft; Steel Axle Rear - Mi4CX 1pc
U3837 Driveshaft; Steel Bone Front - Mi4CX 1pc
U3838 Driveshaft; Steel Bone Rear - Mi4CX 1pc
U3907 Alloy Pulley 20T - Mi3/Mi4
U3924 Bando Extra Strong Rear Belt - Mi3 - Mi4
U3930 Pulley Fences 20T
U4066 Bando Extra Strong Belt 171T - Mi4 Front
U4250 Diff Clamp - Mi5 - pk2
U4260 Gear Diff Housings - Mi5
U4261 Gear Diff Bevel Gears - Mi5
U4262 Layshaft/Motor Mount - Mi5
U4263 Transmission Housing Side 'A' - Mi5
U4264 Transmission Housing Side 'B' - Mi5
U4265 Eccentric Side 'A' - Mi5
U4266 Eccentric Side 'B' -Mi5
U4267 Layshaft - Mi5
U4277 Front Spool - Mi5
U4279 Gear Diff Rebuild Kit - Mi5
U4296 Gear Diff Output - Mi5 - 1pc
U4316 Layshaft Endcap - Mi5 - 1pc
U4331 Driveshaft; Steel Front - Mi5 - 1pc
U4332 Spool Spindle - Mi5
U4333 Assembled Gear Diff - Mi5

BEARINGS AND BALLS

G200 ZX1 - Microlube
H1031 Bearing Blaster Aerosol 500ml
U1411 Ball Bearing - 4x8x3 Shielded. (pr)
U1529 Ball Bearing - 4x8x3 Flanged (pr)
U2148 Ball Bearing - 5x10x4 Shielded (pr)
U2189 Wheel Bearings 8pcs 10x5x4+Shim Set
U3016 Ball Bearing - 10x15x4 - Shielded (pr)
U3136 Ball Bearing - 5x8x2.5 - Shielded (pr)
U4280 Bearing - 4x9x4 Shielded - pk2

SHOCK ABSORBERS

U2993 Race Shock Body; Nickel Teflon (pr)
U2997 Race Shock Rod; Ti-Nitride - 30mm (pr)
U3937 Shock Mouldings
U4253 Moulded Shock Top - Mi5 - pk4
U4278 Shock Rebuild Kit - Mi5
U4284 PTFE 3 Hole Piston - Mi5
U4285 Pro Shock Seal Blue - On Road - pk8
U4300 Shock Seal Cap (Black) - Mi5 - 1pr
U4301 Threaded Shock Collar (Black) - Mi5 - 1pr
U4302 Short Ball Socket (Black) - Mi5 - pk8
U4334 Assembled Shocks - Mi5
U4335 Shock Top ring - Mi5 - (pr)

BIG BORE SHOCKS

U3670 Big Bore Shock; 2 Hole Pistons pr
U3671 Big Bore Shock; 4 Hole Pistons pr
U3672 Big Bore Shock; 6 Hole Pistons pr
U3770 Big Bore Rounded Pistons; 3 Hole pr
U3771 Big Bore Rounded Pistons; 5 Hole pr
U3775 Big Bore Shocks Assembled - Touring - Pair
U3776 Big Bore Spring Tuning Set Trg- 5prs
U3777 Big Bore Springs; 14lb/in pr
U3778 Big Bore Springs; 16lb/in pr
U3779 Big Bore Springs; 17lb/in pr
U3780 Big Bore Springs; 20lb/in pr
U3781 Big Bore Springs; 23lb/in pr
U3782 HD Diaphragm - pk4
U3783 Big Bore Shock Body; Touring pr
U3784 Big Bore Shock Cap; Touring pr
U3785 Big Bore Shock Rods; Touring pr
U3786 Big Bore Shock Seal Rebuild Kit; Touring pr
U4209 Vented Shock Caps - Big Bore - (Pr)

SPRINGS

G882 Spec-R Touring Spring Set-Soft 2.5-2.8
G895 Spec-R Touring Spring - Soft 2.6
G896 Spec-R Touring Spring - Soft 2.7
G897 Spec-R Touring Spring - Soft 2.8
U4304 Spring 14Lb/in - White - Mi5 - 1pr
U4305 Spring 15Lb/in - Blue - Mi5 - 1pr
U4306 Spring 16Lb/in - Green - Mi5 - 1pr
U4307 Spring 17Lb/in - Red - Mi5 - 1pr
U4308 Spring 18Lb/in - Yellow - Mi5 - 1pr
U4309 Spring Set - Mi5 - 5pr

SHOCK AND DIFF OIL

CR200 CORE RC Silicone Oil - 100cSt - 60ml
CR201 CORE RC Silicone Oil - 150cSt - 60ml

SHOCK AND DIFF OIL CONT....

CR202 CORE RC Silicone Oil - 200cSt - 60ml
CR203 CORE RC Silicone Oil - 250cSt - 60ml
CR204 CORE RC Silicone Oil - 300cSt - 60ml
CR205 CORE RC Silicone Oil - 350cSt - 60ml
CR206 CORE RC Silicone Oil - 400cSt - 60ml
CR207 CORE RC Silicone Oil - 450cSt - 60ml
CR208 CORE RC Silicone Oil - 500cSt - 60ml
CR209 CORE RC Silicone Oil - 550cSt - 60ml
CR210 CORE RC Silicone Oil - 600cSt - 60ml
CR211 CORE RC Silicone Oil - 700cSt - 60ml
CR212 CORE RC Silicone Oil - 800cSt - 60ml
CR213 CORE RC Silicone Oil - 900cSt - 60ml
CR214 CORE RC Silicone Oil - 1000cSt - 60ml
CR215 CORE RC Silicone Oil - 1300cSt - 60ml
CR216 CORE RC Silicone Oil - 2000cSt - 60ml
CR217 CORE RC Silicone Oil - 3000cSt - 60ml
CR218 CORE RC Silicone Oil - 4000cSt - 60ml
CR219 CORE RC Silicone Oil - 5000cSt - 60ml
CR220 CORE RC Silicone Oil - 6000cSt - 60ml
CR221 CORE RC Silicone Oil - 7000cSt - 60ml
CR222 CORE RC Silicone Oil - 10000cSt - 60ml
CR223 CORE RC Silicone Oil - 20000cSt - 60ml
CR224 CORE RC Silicone Oil - 30000cSt - 60ml
CR225 CORE RC Silicone Oil - 40000cSt - 60ml
CR226 CORE RC Silicone Oil - 50000cSt - 60ml
CR227 CORE RC Silicone Oil - 100000cSt - 60ml
CR228 CORE RC Silicone Oil - 300000cSt - 60ml
G030 Pure Silicone Shock Oil - 30w
G035 Pure Silicone Shock Oil - 35w
G040 Pure Silicone Shock Oil - 40w
G045 Pure Silicone Shock Oil - 45w
G050 Pure Silicone Shock Oil - 50w
G055 Pure Silicone Shock Oil - 55w
G060 Pure Silicone Shock Oil - 60w
G070 Pure Silicone Shock Oil - 70w
G080 Pure Silicone Shock Oil - 80w
MR-GEARA MR33 Gear Oil A
MR-GEARB MR33 Gear Oil B
MR-GEARC MR33 Gear Oil C

SPEED PACKS

CR024 CORE RC - Serrated M4 Steel Wheel Nut pk4
CR035 CORE RC - Serrated Alloy M4 Nuts; Blue pk 4
CR036 CORE RC - Serrated Alloy M4 Nuts; Purple pk 4
CR061 Small Body Clip 1/10 - Silver (8)
CR062 Small Body Clip 1/10 - Gold (8)
CR063 Small Body Clip 1/10 - Fluorescent Yellow (8)
CR064 Small Body Clip 1/10 - Fluorescent Green (8)
CR065 Small Body Clip 1/10 - Fluorescent Red (8)
CR066 Small Body Clip 1/10 - Metallic Green (8)
CR067 Small Body Clip 1/10 - Metallic Red (8)
CR069 Small Body Clip 1/10 - Metallic Purple (8)
CR071 Big Body Clip 1/10 - Silver (8)
CR072 Big Body Clip 1/10 - Gold (8)
CR073 Big Body Clip 1/10 - Fluorescent Yellow (8)

SPEED PACKS CONT....

CR074 Big Body Clip 1/10 - Fluorescent Green (8)
CR075 Big Body Clip 1/10 - Fluorescent Red (8)
CR076 Big Body Clip 1/10 - Metallic Green (8)
CR077 Big Body Clip 1/10 - Metallic Red (8)
CR078 Big Body Clip 1/10 - Metallic Blue (8)
CR079 Big Body Clip 1/10 - Metallic Purple (8)
CR081 Extra Long Body Clip 1/10 - Silver (6)
CR082 Extra Long Body Clip 1/10 - Gold (6)
CR083 Extra Long Body Clip 1/10 - Fluorescent Yellow (6)
CR084 Extra Long Body Clip 1/10 - Fluorescent Green (6)
CR085 Extra Long Body Clip 1/10 - Fluorescent Red (6)
CR086 Extra Long Body Clip 1/10 - Metallic Green (6)
CR087 Extra Long Body Clip 1/10 - Metallic Red (6)
CR088 Extra Long Body Clip 1/10 - Metallic Blue (6)
CR089 Extra Long Body Clip 1/10 - Metallic Purple (6)
U1544 SPEED PACK - Short M3; Cap Hd
U1547 SPEED PACK - M3 Nuts
U1548 SPEED PACK - M3 Washers
U1550 SPEED PACK - Socket Wrenches (pk3)
U1551 SPEED PACK - E Clips -2 x 8pcs
U1552 SPEED PACK - R Clips
U1606 SPEED PACK - Servo Tape - 30pk
U1633 SPEED PACK - Small Pins (pk)
U1960 SPEED PACK - O Rings; Various
U2128 SPEED PACK - Grub-Set Screws M3 M4
U2760 SPEED PACK - M3 Button Hd; 4 to 20
U2858 SPEED PACK Alloy M3x6 Spacers ;0.5;1;2;3mm - 16pcs
U3021 SPEED PACK - M3x6 Csk Allen Hi-T
U3022 SPEED PACK - M3x8 Csk Allen Hi-T
U3023 SPEED PACK - M3x10 Csk Allen Hi-T
U3024 SPEED PACK - M3x12 Csk - M3 x 10 Button Screws
U3131 SPEED PACK Alloy Spacers M3x7mm 0.5;1;2mm (pk18)
U3168 SPEED PACK - M2.5/M2.6 Screws
U3754 SPEED PACK - M2.5x10 Csk Hd pk8
U4155 SPEED PACK M3 Csk Washers - Black Alloy (pk10)
U4210 Speed Pack - Pinion Grub Screw Set pk10
U4241 SPEED PACK M3 Alloy Nyloc Nuts - Black - pk10
U4314 SPEED PACK Alloy Black Washers - Mi5 - 16pc

SPEED SECRET - OPTION PARTS

CR110 Alloy Servo Arm; Futaba Purple
CR111 Alloy Servo Arm; KO/Sanwa Purple
CR112 Alloy Servo Arm; Futaba Blue
CR113 Alloy Servo Arm; KO/Sanwa Blue
CR117 Alloy Servo Arm; Futaba Black
CR118 Alloy Servo Arm; KO/Sanwa Black
CR280 Ti Pro Ball Studs - Short - pair
CR281 Ti Pro Ball Studs - Ultra Short - pair
CR282 Ti Ball Studs - Long - pair
CR283 Ti Ball Stud Set - Mi-5
G868 SPEC-R Gear Differential - Mi4 REAR - Mi5 FRONT
G869 SPEC-R Replacement Gear Set
G870 SPEC-R Gear Diff Screw Set (10pcs)
G871 SPEC-R Gear Diff. Gasket Set (V.11)
G873 SPEC-R Gear Diff Housing 36T - Mi4
G874 SPEC-R 0.1mm Shims (10)
G875 SPEC-R Titanium Gear Diff Pins
G883 SPEC-R Carbon Internal Gear Set

SPEED SECRET - OPTION PARTS CONT....

G884 Driveshaft Front True CV - Mi4 - pr
G885 Cross Joint Set for version 2 CV Shaft
G886 C-Clips for CV Swing Shaft version 2 - 8pcs
S500B Schumacher BANNER 6x3ft
U1301 Silicone Diff Lube - Pot
U1439 Ball Bearing - 5x9x3 Shielded. (pr)
U1573 Titanium Turnbuckle; purple - 53mm (pr)
U1576 Titanium Pivot Pin; 25mm (pr)
U1905 Titanium Turnbuckle; purple - 35mm (pr)
U1954 Pro - Thrust Bearing
U1957 Moly Grease - Pot
U2187 M3 Nyloc Nut - Purple Alloy (pk8)
U2251 Kwik Klip; 1/8x1.0 and 2.0mm
U2573 Pro-Diff Screw Set
U2574 Ball Bearing - 5x9x2.5 Open (pr)
U2719 Titanium Pivot Pin; 18mm pr
U2862 Ceramic Bearing - 5x10x4 Shielded (pr)
U2988 M3 Csk Washers - Purple Alloy (pk10)
U2996 Race Shock Piston - Trg 3 Hole (pr)
U3017 Ceramic Bearing - 10x15x4 - Shielded (pr)
U3019 Diff Balls; Ceramic Nitride 2.5mm (pk12)
U3126 CNC Pulley and Fences; 20T - Mi4LP
U3132 Kwik Clips 0.25 and 0.5mm (pk8)
U3140 Diff Washer; ProSpec - Mi4 (pr)
U3161 87T 48DP CNC Spur Gear - Mi4
U3162 89T 48DP CNC Spur Gear - Mi4
U3163 114T 64DP CNC Spur Gear - Mi4
U3165 118T 64dp CNC Spur Gear - Mi4
U3247 70T 48DP CNC Spur Gear - Mi4
U3248 96T 64dp CNC Spur Gear - Mi4
U3260 Ti Shock Post - Mi4 pr
U3269 90T 64DP CNC Spur Gear - Mi4
U3270 106T 64DP CNC Spur Gear - Mi4
U3386 Ceramic Bearing - 4x8x3 - Shielded (pr)
U3387 Ceramic Bearing - 5x9x3 MR95 (pr)
U3400 66T 48DP CNC Spur Gear - Mi4
U3490 Alloy Servo Mounts Violet
U3508 CNC Diff Pulley and Fences; 36T - Mi4LP
U3560 74T 48DP CNC Spur Gear Mi4
U3570 Alloy Wheel Hex; Slim+O ring - Mi4LP (pr)
U3582 Precision Balance Pivot Set
U3820 Alloy Diff Output; Male - Mi4CX
U3821 Alloy Diff Output; Female - Mi4CX
U3833 Driveshafts; Alloy Rear - Mi4CX pr
U3840 Driveshaft; Alloy Axle Rear - Mi4CX 1pc
U3841 Driveshaft; Alloy Bone Front - Mi4CX 1pc
U3842 Driveshaft; Alloy Bone Rear - Mi4CX 1pc
U4130 Vented Shock Caps - Small Bore - (Pr)
U4217 Vented Shock Cap Service Kit
U4230 M3 x 6mm Alloy Button Head Screws pk10
U4231 M3 x 8mm Alloy Button Head Screws pk10
U4232 M3 x 10mm Alloy Button Head Screws pk10
U4233 M3 x 12mm Alloy Button Head Screws pk10
U4234 M3 x 6mm Alloy Csk Screws pk10

TOOLS CONT....

H1055 GT85 Lube and Clean Aerosol 400ml
H1056 Loctite 243 Thread Lock
H1057 Loctite Precision Super Glue - 5g
NR95120 Ultimate Cleaner Spray
U2075 Camber and Ride Height Gauges - C/C
U2100 Set Up Wheels;Camber and Toe In-SST
U2789 Schumacher Hex Driver - 1.5mm
U2790 Schumacher Hex Driver - 2.0mm
U2791 Schumacher Hex Driver - 2.5mm
U2792 Schumacher Hex Driver - 3.0mm
U2795 Schumacher M3 Nut Driver
U2796 Schumacher M4 Nut Driver
U2818 Schumacher Body Reamer
U3582 Precision Balance Pivot Set
U4229 Steel Spanner - 5.5mm/3.9mm
U4315 C/F Lipo/Roll Bar Block Tool - Mi5

1-10 TOURING WHEELS

NR95075 NOSRAM VTEC Wheelsticker Racing 10 spoke
NR95076 NOSRAM VTEC Wheelsticker Multi spoke
U2500 Rev-Lite; 24mm - White (Pk4)
U2777 Rev-Lite; Flex 24mm - White (Pk4)
U3792 Rev-Lite wheel Std; 20mm - White (Pk4)

1-10 TOURING TYRES AND INSERTS

NR95031 VTEC CPX; Pre-Glued Carpet (4 pcs.)
NR95034 VTEC 30X; Pre-Glued Asphalt (4 pcs.)
NR95035 VTEC 33X; Pre-Glued Asphalt (4 pcs.)
NR95055 VTEC Rain Dunlop D20 Radial D20 pr
U6623 SST Mini Pins 24/25 - Blue (pr)
U6624 SST Mini Pins 24/25 - Yellow (pr)
U6627 SST Foam Tyre Insert - 24/25 Hard (pr)
U6628 SST Foam Tyre Insert - 24/25 Comp (pr)
U6629 SST Rally 24/25 - Yellow (pr)
U6630 SST Rally 24/25 - White (pr)
U6635 SST Foam Tyre Insert - 20 Hard (pr)
U6670 SST Mini Pins 20 - Blue (pr)
U6671 SST Mini Pins 20 - Yellow (pr)
U6672 SST Belted Slick 25 - White (pr)
U6690 SST Carpet Dragon 24/25mm (pr)
U6716 SST Mini Pins 24/25 - Green (pr)
U6717 SST Mini Pins 20 - Green (pr)
U6758 Moulded Insert; Yellow - Touring (pr)
U6764 JB Foam Inserts (pr)
U6780 Moulded Insert: Red - Touring (pr)

SOREX - TOURING CAR TYRES

XCO-20R Sorex Competition Tyre - 20R
XCO-24R Sorex Competition Tyre - 24R
XCO-28R Sorex Competition Tyre - 28R
XCO-32R Sorex Competition Tyre - 32R
XCO-36R Sorex Competition Tyre - 36R
XCO-40R Sorex Competition Tyre - 40R
XG-24RY Sorex Glued 24R+Yellow+Revlite24 pk4
XG-28JB Sorex Glued 28R+JB+Revlite24 pk4
XG-32JB Sorex Glued 32R+JB+Revlite24 pk4
XG-32RY Sorex Glued 32R+Yellow+Revlite24 pk4 BRCA
XG-36SR Sorex Glued 36R+Red+Stiff Light pk4
XG-36SY Sorex Glued 36R+Yellow+Stiff Light pk4

TYRE ADDITIVE

C180101 CS Competition Grip Additive
C6400 CS High Grip Additive
C6431 CS Tire Clean Fix
C6440 CS Tire MAX Grip
C6460 CS Speed Grip Carpet
G862 Kimwipes S-200 - Tyre Warmer Tissue
MR0001 Marc Rheinard Outdoor Additive
NR96010 Traction additive carpet
NR96020 Traction additive asphalt

BATTERIES

CR005 CORE RC Battery Tape - Black
CR006 CORE RC Battery Tape - Blue
CR007 CORE RC Silicone Wire 12g - Red/Black 2x50cm
CR008 CORE RC RED Connector with 2x4mm Tubes
CR009 CORE RC RED Connector with 2x4mm Males
CR037 CORE RC - Battery Tape - Purple
CR050 CORE RC Silicone Wire 12g - Red 1 Metre
CR051 CORE RC Silicone Wire 12g - Black 1 Metre
CR052 CORE RC Silicone Wire 12g - Blue 1 Metre
CR053 CORE RC Silicone Wire 12g - Red 50 Metre Reel
CR054 CORE RC Silicone Wire 12g - Black 50 Metre Reel
CR055 CORE RC Silicone Wire 12g - Blue 50 Metre Reel
CR056 Balance Charge Lead; JST to 2mm Male 7.4v
CR059 CORE RC - Safe Charge Pouch 23x30cm
CR115 CORE RC Silicone Wire 12g - Red/Black/Blue 3x50cm
CR121 Heatshrink 3.0mm dia Black - 20pcs
CR122 Heatshrink 4.0mm dia Black - 20pcs
CR123 Heatshrink 5.0mm dia Black - 20pcs
CR124 Heatshrink 6.0mm dia Black - 20pcs
CR125 Heatshrink 6.0mm dia Red - 20pcs
CR127 Heatshrink 8.0mm dia Black - 12pcs
CR128 Heatshrink 10.0mm dia Black - 12pcs
CR129 Heatshrink 12.0mm dia Black - 12pcs
CR158 CORE RC - 4000mAHr 7.4v 20C/40C LiPo
CR159 Core RC - Battery Tape - Orange
CR170 CORE RC Lipo Locker - 17 x 8 x 7cm
GM98973 LiFe Battery V-Maxx 35C 2S2P/4000 6.6 G3
GM99018 Lipo Battery V-Maxx 70C 2S2P/6800 7.4v G
MR-SB MR33 Lipo Bag
NR95805 NOSRAM LiPo Hardcase balancing adapter
NR999500 Lipo 7200 Big Mama X-treme Race H/Case 50C-7.4V
NR999501 Lipo 7000 X-treme Race H/Case 55C-7.4V
NR999504 Lipo 4500 X-treme Race Short H/Case 55C-7.4V
NR99955 Hardcase 30C Lipo Power Pack 3200 - 7.4V EPH
NR99956 Hardcase 30C Lipo Power Pack 4600 - 7.4V EPH
NR99957 Nosram 30C Lipo Power Pack 3800-7.4V-East Plug H/c
NR99982 LiPo TX-Pack 3600/11.1v Sanwa M11/MX-3-Futaba 3PK
SFE1891F Tx Battery; Futaba 3PK+JR-1800mah 9.9v 1C LiFe
SFE2361F Tx Battery; Futaba 4PK+JR-2400mah 6.6v 1C LiFe
TP2700-2SSR35D Thunder Power Lipo 2700mAh 2S - 7.4V -35C/70C
TP3300-2SPR65D Thunder Power Lipo 3300mAh 2S - 7.4V - 65C/130C
TP3300-2SSR35D Thunder Power Lipo 3300mAh 2S - 7.4V - 35C/70C
TP3800-2SPR65S Thunder Power Lipo 3800mAh 2S shorty - 65C/130C

SPEED SECRET - OPTION PARTS CONT....

U4235 M3 x 8mm Alloy Csk Screws pk10
U4236 M3 x 10mm Alloy Csk Screws pk10
U4237 M3 x 12mm Alloy Csk Screws pk10
U4238 M3 x 16mm Alloy Csk Screws pk10
U4240 Mi-5 - M3 Alloy Screw Set - 78pcs
U4258 Front Yokes 6deg - Mi5 - 1pr
U4271 Front Roll Bar Set - Mi5
U4272 Rear Roll Bar Set - Mi5
U4290 Mid Motor Conversion - Mi5
U4295 Optional Rear Hub Carrier Arm Set - Mi5
U4311 C/F Link Mount (3Dink) - Mi5 - 1pc
U4321 Alloy Wheel Shims - Mi5 - 8pc
U4322 Bando Mid Motor Front Belt 128T - Mi5
U4323 Bando Mid Motor Rear Belt 103T - Mi5
U4324 Mid Motor Topdeck - Mi5
U4325 Pro Ball Diff - Mi5
U4326 Titanium Turnbuckle; purple - 30mm (pr)
U4327 Alloy Servo Mount Black - Cat K1
U4328 Servo Saver 2013 Spec - Mi5
U4329 Servo Saver 2013 Mouldings
U4330 Servo Saver 2013 Springs
U4336 Ti Turnbuckle Set - Mi5 (7pc)
U4337 Extra Body Post Set - Mi5
U4338 Driveshafts; Alloy Front - Mi5 pr
U4339 Top Deck End Alloy - Mi5 - 1pc
U4340 C/F LiPo Stops Mid Belt - Mi5
U4341 C/F Servo Mount (Servo Saver) - Mi5
U4342 Ti Shock Rods - Mi-4/Mi-5 - pr
U4354 C/F Rear Wishbone 2.5deg LH - Mi5 - 1pc
U4356 C/F Rear Wishbone 2.0deg LH - Mi5 - 1pc
U4358 C/F Rear Wishbone 2.5deg RH- Mi5 - 1pc
U4360 C/F Rear Wishbone 2.0deg RH - Mi5 - 1pc

PINIONS

U3414 Pinion; Hard Alloy 48dp - 14T
U3415 Pinion; Hard Alloy 48dp - 15T
U3416 Pinion; Hard Alloy 48dp - 16T
U3417 Pinion; Hard Alloy 48dp - 17T
U3418 Pinion; Hard Alloy 48dp - 18T
U3419 Pinion; Hard Alloy 48dp - 19T
U3420 Pinion; Hard Alloy 48dp - 20T
U3421 Pinion; Hard Alloy 48dp - 21T
U3422 Pinion; Hard Alloy 48dp - 22T
U3423 Pinion; Hard Alloy 48dp - 23T
U3424 Pinion; Hard Alloy 48dp - 24T
U3425 Pinion; Hard Alloy 48dp - 25T
U3426 Pinion; Hard Alloy 48dp - 26T
U3427 Pinion; Hard Alloy 48dp - 27T
U3428 Pinion; Hard Alloy 48dp - 28T
U3429 Pinion; Hard Alloy 48dp - 29T
U3430 Pinion; Hard Alloy 48dp - 30T
U3431 Pinion; Hard Alloy 48dp - 31T
U3432 Pinion; Hard Alloy 48dp - 32T
U3433 Pinion; Hard Alloy 48dp - 33T
U3434 Pinion; Hard Alloy 48dp - 34T
U3435 Pinion; Hard Alloy 48dp - 35T
U3436 Pinion; Hard Alloy 48dp - 36T
U3437 Pinion; Hard Alloy 48dp - 37T

PINIONS CONT....

U3438 Pinion; Hard Alloy 48dp - 38T
U3439 Pinion; Hard alloy 48dp - 39T
U3440 Pinion; Hard Alloy 48dp - 40T
U3619 Pinion; Hard Alloy 64dp - 19T
U3620 Pinion; Hard Alloy 64dp - 20T
U3621 Pinion; Hard Alloy 64dp - 21T
U3622 Pinion; Hard Alloy 64dp - 22T
U3623 Pinion; Hard Alloy 64dp - 23T
U3624 Pinion; Hard Alloy 64dp - 24T
U3625 Pinion; Hard Alloy 64dp - 25T
U3626 Pinion; Hard Alloy 64dp - 26T
U3627 Pinion; Hard Alloy 64dp - 27T
U3628 Pinion; Hard Alloy 64dp - 28T
U3629 Pinion; Hard Alloy 64dp - 29T
U3630 Pinion; Hard Alloy 64dp - 30T
U3631 Pinion; Hard Alloy 64dp - 31T
U3632 Pinion; Hard Alloy 64dp - 32T
U3633 Pinion; Hard Alloy 64dp - 33T
U3634 Pinion; Hard Alloy 64dp - 34T
U3635 Pinion; Hard Alloy 64dp - 35T
U3636 Pinion; Hard Alloy 64dp - 36T
U3637 Pinion; Hard Alloy 64dp - 37T
U3638 Pinion; Hard Alloy 64dp - 38T
U3639 Pinion; Hard Alloy 64dp - 39T
U3640 Pinion; Hard Alloy 64dp - 40T
U3641 Pinion; Hard Alloy 64dp - 41T
U3642 Pinion; Hard Alloy 64dp - 42T
U3644 Pinion; Hard Alloy 64dp - 44T
U3646 Pinion; Hard Alloy 64dp - 46T
U3648 Pinion; Hard Alloy 64dp - 48T
U3650 Pinion; Hard Alloy 64dp - 50T

TOOLS

CR044 CORE RC - Curved Body Scissors
CR045 CORE RC - Straight Body Scissors
CR100 Shock Shaft Pliers - Purple
CR101 Shock Shaft Pliers - Black
CR102 Magnetic Parts Tray - Purple
CR103 Magnetic Parts Tray - Black
CR148 CORE RC - Polybutler Pit Box; Black
CR233 Piston Drilling Kit-1.1, 1.2, 1.3, 1.4, 1.5mm
ED120115 Ball Allen Wrench 1.5mm x 120mm
ED180001 Graphite Flat Set-Up Board for 1/12 & 1/10 On-Road
ED181001 Chassis Droop Gauge Blocks 10mm for 1/10 - (2)
ED181004 Chassis Droop Gauge 3-10mm for 1/10 Cars (10mm)
ED181007 Ultra-Fine Chassis Droop Gauge 4.0-6.6mm
ED181008 Ride Height Gauge - 0mm - 15mm (Beveled)
ED181009 Quick Downstop Gauge Tool - 1.0 - 6.5mm
ED181012 Alu Set-Up Wheels (4)
ED190012 Reamer with Protection Cap for Body - 14mm
ED290801 Specialized Tool Set for 1/10 EP with Alloy Case
H1026 Ride Height Gauge; Purple Alloy; 0-10mm
H1027 Droop Gauge Set; Purple Alloy - Touring
H1032 Alloy Camber Gauge - 1/10th

BATTERIES CONT....

TP4300-2SPR65D Thunder Power Lipo 4300mAh 2S - 7.4V - 65C/130C
TP4300-2SSR35D Thunder Power Lipo 4300mAh 2S - 7.4V - 35C/70C
TP4P10E Thunder Power 4 Pin Balance connector 10Extension"
TP4P8 TP 4 Pin Balance Connector 8 Colour Coded Wires"
TP5300-2SPR65B Thunder Power Lipo 5300mAh 2S - 7.4V - 65C/130C
TP5300-2SPR65D Thunder Power Lipo 5300mAh 2S - 7.4V - 65C/130C
TP5400-2SSR35D Thunder Power Lipo 5400mAh 2S - 7.4V - 35C/70C
TP6000-2SPR65B Thunder Power Lipo 6000mAh 2S - 7.4V - 65C/130C
TP6600-2SSR35D Thunder Power Lipo 6600mAh 2S - 7.4V - 35C/70C
TP6P10E Thunder Power 6 Pin Balance Connector 10Extension"
TP6P13 TP 6 Pin Balance Connector 13 Colour Coded Wires"
TP6P4PE Thunder Power 6 Pin Adaptor/Extension
TP8000-2SSR35D Thunder Power Lipo 8000mAh 2S - 7.4V - 35C/70C
TPLSBL Thunder Power Lipo Charge Bag Large 9 x 12""
TPLSBS Thunder Power Lipo Charge Bag Small 7 x 8" x 5""

BRUSHLESS SPEEDCONTROLS

CR173 PACE 45R Brushless ESC 1s/2s
CR174 PACE 45R Programming Card
GM97168.B GM-Genius 120 with Boost 3.7 - 7.4V
NR90100 Matrix Brushless Reverse
NR90410 Nosram Single BL Speed Control
NR90430 NOSRAM One Brushless ESC
NR90450 Evil Brushless Power Reverse
NR90960 Comet EVO Brushless Speed Control
NR90970 Comet HD Brushless Speed Control
NR90999 Pearl Upgrade Kit -Mod + Stock
SP000010 Reventon-S ESC - 2S - Blue
SP000043 Reventon-R ESC - 2S - Orange
SP000048 Reventon Stock Club Race ESC Black
SP000060 Reventon-S ESC - 2S - Orange
SP000061 Reventon-S ESC - 2S - Black
SP000062 Reventon-S ESC - 2S - Silver
SP000063 Reventon-R ESC - 2S - Blue
SP000064 Reventon-R ESC - 2S - Silver
SP000162 Reventon Pro - ESC-2S-Blue
SP000222 Reventon Pro ESC-2S-Black/Grey
SPEXT98802B Speed Passion GT V2.0 ESC - Blue
SPEXT98802LPB Speed Passion LPF V2.0 ESC - Blue
SPEXT98802LPF Speed Passion LPF V2.0 ESC - Carbon Look
SPEXT98802PRO Speed Passion GT V2.0 ESC - Carbon Look
SPEXT98802S Speed Passion GT V2.0 ESC - Silver
SPEXT98802SB GT V2.1 ESC Pro Stock Edition - Blue Edition
SPEXT98802SCB GT V2.1 ESC Pro Stock Edition - Black edition

BRUSHLESS ESC and MOTOR COMBO

SP000053 Cirtix Stk Club Race+Ultra S/Man 17.5T V3.0 Combo
SP000054 Cirtix Stk Club Race+Ultra S/Man 21.5T V3.0 Combo
SP000055 Cirtix Stk Club Race+Ultra S/Man 25.5T V3.0 Combo
SP000193 Reventon-R ESC-2S-Silver Comp V3.0-10.5R Combo
SP000194 Reventon-R ESC-2S-Silver Comp V3.0-13.5R Combo
SP000195 Reventon-R ESC-2S-Silver Comp V3.0-17.5R Combo
SP000200 Reventon Stock Club Race 10.5 Combo Comp V3 Motor
SP000201 Reventon Stock Club Race 13.5 Combo Comp V3 Motor
SP000202 Reventon Stock Club Race 17.5 Combo Comp V3 Motor
SP000203 Reventon Stock Club Race 21.5 Combo Comp V3 Motor
SP000208 Reventon Stk Clb Rce 13.5R Combo V3 Fix Tmng Motor
SP000209 Reventon Stk Clb Rce 17.5 Combo V3 Fix Tmng Motor

BRUSHLESS ESC and MOTOR COMBO CONT....

SPPRO105MMM Reventon-Pro ESC Grey V3.0 MMM 10.5R Combo
SPPRO105V3 Reventon-Pro ESC Grey-V3.0-10.5R Combo
SPPRO135MMM Reventon-Pro ESC Grey V3.0 MMM 13.5R Combo
SPPRO135V3 Reventon-Pro ESC Grey-V3.0-13.5R Combo
SPPRO175MMM Reventon-Pro ESC Grey V3.0 MMM 17.5R Combo
SPPRO215MMM Reventon-Pro ESC Grey V3.0 MMM 21.5R Combo
SPPRO35MMM Reventon-Pro ESC Grey V3.0 MMM 3.5R Combo
SPPRO40MMM Reventon-Pro ESC Grey V3.0 MMM 4.0R Combo
SPPRO45MMM Reventon-Pro ESC Grey V3.0 MMM 4.5R Combo
SPPRO50MMM Reventon-Pro ESC Grey V3.0 MMM 5.0R Combo
SPPRO55MMM Reventon-Pro ESC Grey V3.0 MMM 5.5R Combo
SPPRO55V3 Reventon-Pro ESC Grey-V3.0-5.5R Combo
SPPRO65V3 Reventon-Pro ESC Grey-V3.0-6.5R Combo
SPPRO75V3 Reventon-Pro ESC Grey-V3.0-7.5R Combo
SPPRO85V3 Reventon-Pro ESC Grey-V3.0-8.5R Combo

BRUSHLESS ACCESSORIES

CR133 Core Sensor Lead; 80mm
CR134 Core Sensor Lead; 180mm
GM2894.15 GM Lead; Genius ESC to Rx
GM2894.4 GM Sensor Lead; GM ESC 10cm
GM2894.9 Sensor Adaptor Cable - Gm-Evo2/Novak-M
GM7168.6 GM Genius USB Programming Set
GM97268.1 GM Rotor; 12.4mm EFRA Stock Spec
GM97286.3 GM Sintered Rotor; 12.5mm
GM97286.4 GM Sensor Lead; STD ESC 180mm
GM97289.1N GM Sensor Board
NR90608 Storm BL - Ceramic Ball Bearing R166
NR90610 Storm BL - Comp Sintered Rotor
NR90611 Storm BL - Sintered Rotor 12.5mm
NR90612 Storm BL - Sintered Rotor 13mm
NR90613 Storm BL - Sintered Rotor 12.3mm
NR90616 Storm Evo Xtreme cooling frontcover
NR90617 Storm Evo Xtreme cool fr cover; thin
NR90618 Storm Evo Xtreme cooling backplate
NR90619 Storm Evo BL Small parts set
NR90631 PURE MR104 Ceramic BB (pr)
NR90632 PURE Small Parts Set
NR90633 PURE Sensor Assembly
NR90635 PURE Evo Light Alloy Front Hsg
NR90636 PURE Evo Alloy End Cover
NR90637 PURE Evo 694ZZ Ball Bearings (2 pcs)
NR90639 Pure Evo Spec Racing 1S Lipo Tuning Rotor
NR90641 PURE Sintered Rotor - 12.5mm
NR90643 PURE Evo Stock Sintered Rotor
NR90644 PURE Evo Tuning Sintered Rotor - 12.0mm
NR90645 PURE Evo Tuning Sintered Rotor - 12.5mm
NR90646 PURE Evo Tuning Sintered Rotor - 13.0mm
NR92500 USB Bridge - Speedo Firmware Update Device
NR92501 USB Bridge Spec2 - Speedo Firmware Update Device
NR92505 Powerwire Set Matrix
NR92512 Cooling Fan; Low Profile - Include Mounting Screws
NR92515 Nosram Motor Fan (30x30) + Alum Mnt Clamp
NR925307 NOSRAM Sensor Wire HighFlex 70mm

BRUSHLESS ACCESSORIES CONT....

NR92531 Pearl Power Capacitor 6-7.4v
NR925315 NOSRAM Sensor Wire HighFlex 150mm
NR925320 NOSRAM Sensor Wire HighFlex 200mm
NR92591 NOSRAM Hardcore Motor Cooler
NR92820 Ultimate Accessory Set
NR92825 Replacement Wire Set Razor
SP000004 Reventon Capacitor 4S
SP000005 Reventon Capacitor 2S
SP000007 Muti LED Program Card Version 2.0
SP000008 Reventon Blue-Tooth" Module"
SP000009 Reventon WiFi" Module"
SP000029 Sensor Unit +20 Timing"for V3.0 Motor-Green Color"
SP000034 Sensor Unit +10 Timing" for V3.0 Motor-Red Color"
SP000041 Sensor Unit for V3.0 - 4.0T/5.0T Motor
SP000059 Sensor Unit +40 Timing for V3.0 Motor Blue
SP13835ER1 SP Rotor 3.5T; Euro R Hi Power 12.5mm
SP138MS105 10.5R Stator for Competition Version 3.0 Motor
SP138MS135 13.5R Stator for Competition Version 3.0 Motor
SP138MS175 17.5R Stator for Competition Version 3.0 Motor
SP138MS215 21.5R Stator for Competition Version 3.0 Motor
SP162801 SP - Sensor Cable 180mm
SP162802 SP - Sensor Cable 90mm
SP162810 SP - HiPower Solder Post; 3pcs
SP162820 SP - HiPower Connector; V3.0 Motors 3pcs
SP1EB01 SP Endbell; Fixed Timing V3.0
SPAMSSC3M SP - Super Capacitor 3 Farads 6 Volt rated
SPCBB138238 SP - Ceramic Motor Bearing
SPSB428 Sensor unit with Team protect for V3.0 motor
TPM-P1000 Thunder Power Bearing Replacement Tool
TPM-P1001 T-Power Bearing Std 1/8x3/8x5/32 (2pcs) S/M 540"
TPM-P1002 T-Power Bearing Ceramic 1/8x3/8/5/32 (2pcs)S/M540"
TPM-P1005 Thunder Power Sensor Unit w/Std Bearing S/M540/550
TPM-P1007 Thunder Power Outer Can/Case w/Screws S/M 540
TPM-P1008 Thunder Power Timing Cap w/Screws S/M540/550
TPM-P1010 Thunder Power Senser Wire Harness 110mm
TPM-P1011 Thunder Power Sensor Wire Harness 200mm
TPM-P1012 Thunder Power Sensor Wire Harness 270mm
TPM-P1014 Thunder Power Insulator Set (Fr/Rr) S/M 540/550
TPM-R540AHT Stock Spec 540 Hi-Torque Rotor 12.5/7.25/25.0 Gm
TPM-R540AMR Thunder Power Mod 540 Rotor 12.2/5.2/25.0 Purple
TPM-R540AMR-S Thunder Power Mod 540 Rotor 12.0/5.0/25.3 Gold
TPM-R540ASR T-Power Stock Spec 540 Rotor 12.2/7.25/24.2 Red
TPM-R540AST T-Power StockSpec Torque Rotor 12.2/7.25/25.0 Blue
TPM-S540A030 Thunder Power 3.0T Modified 540 Stator
TPM-S540A035 Thunder Power 3.5T Modified 540 Stator
TPM-S540A040 Thunder Power 4.0T Modified 540 Stator
TPM-S540A045 Thunder Power 4.5T Modified 540 Stator
TPM-S540A050 Thunder Power 5.0T Modified 540 Stator
TPM-S540A055 Thunder Power 5.5T Modified 540 Stator
TPM-S540A060 Thunder Power 6.0T Modified 540 Stator
TPM-S540A065 Thunder Power 6.5T Modified 540 Stator
TPM-S540A075 Thunder Power 7.5T Modified 540 Stator
TPM-S540A085 Thunder Power 8.5T Modified 540 Stator
TPM-S540A095 Thunder Power 9.5T Modified 540 Stator
TPM-S540A105 Thunder Power 10.5T Stock Spec 540 Stator
TPM-S540A135 Thunder Power 13.5T Stock Spec 540 Stator
TPM-S540A175 Thunder Power 17.5T Stock Spec 540 Stator
TPM-S540A215 Thunder Power 21.5T Stock Spec 540 Stator

BRUSHLESS MOTORS

GM97279 GM Pro 9T Delta Wind BL Motor
GM97283.5 GM Pro 3.5T Star Wind BL Motor
GM97284 GM Pro 4T Star Wind BL Motor
GM97284.5 GM Pro 4.5T Star Wind BL Motor
GM97287 GM Pro 7T Delta Wind BL Motor
GM97288 GM Pro 8T Delta Wind BL Motor
GM97361 Brushless GM PRO 21.5T Metal
GM97404 GM Race BL Motor 4.5T
GM97405 GM Race BL Motor 5.5T
NR90540 Dragon BL Sport Modified 15.5T
NR90550 Cobra Brushless Motor - 6.5T
NR90555 Cobra Brushless Motor - 10.5T
NR90648 Nosram Pure 2 BL - 10.5T
NR90649 Nosram Pure 2 BL - 9.5T
NR90664 Nosram Pure 2 BL - 7.5T
NR90684 Nosram Pure 2 BL - 5.5T
NR90689 Nosram Pure 2 BL - 5.0T
NR90693 PURE Evolution BL - 4.5t OCTA WIND
NR90694 Nosram Pure 2 BL - 4.5T
NR90702 PURE Evolution BL - 4.0t
NR90703 PURE Evolution BL - 4.0t Octa Wind
NR90704 Nosram Pure 2 BL - 4.0T
NR91831 PURE Evo Stock 10.5T
NR91834 Nosram Pure 2 BL - Spec Racing Motor - 10.5T
NR91841 PURE Evo Stock 13.5T
NR91844 Nosram Pure 2 BL Spec Racing Motor - 13.5T
NR91854 Nosram Pure 2 BL Spec Racing Motor - 17.5T
SP000035 1/10 Competition MMM Series 3.5R BL Motor
SP000036 1/10 Competition MMM Series 4.5R BL Motor
SP000037 1/10 Competition MMM Series 10.5R BL Motor
SP000038 1/10 Competition MMM Series 13.5R BL Motor
SP000039 1/10 Competition MMM Series 17.5R BL Motor
SP000040 1/10 Competition MMM Series 21.5R BL Motor
SP000148 1/10 Competition MMM Series 5.0R BL Motor
SP000149 1/10 Competition MMM Series 5.5R BL Motor
SP000151 1/10 Competiton MMM Series 4.0R BL Motor
SP138105V3 Speed Passion V3.0 Comp BL Motor; 10.5T
SP138135V3 Speed Passion V3.0 Comp BL Motor; 13.5T
SP138175V3 Speed Passion V3.0 Comp BL Motor; 17.5T
SP13835V3 Speed Passion V3.0 Comp BL Motor; 3.5T
SP13840V3 Speed Passion V3.0 Comp BL Motor; 4.0T
SP13845V3 Speed Passion V3.0 Comp BL Motor; 4.5T
TPM-540A030 Thunder Power 3.0T Modified 540 BL Motor
TPM-540A035 Thunder Power 3.5T Modified 540 BL Motor
TPM-540A040 Thunder Power 4.0T Modified 540 BL Motor
TPM-540A045 Thunder Power 4.5T Modified 540 BL Motor
TPM-540A050 Thunder Power 5.0T Modified 540 BL Motor
TPM-540A055 Thunder Power 5.5T Modified 540 BL Motor
TPM-540A060 Thunder Power 6.0T Modified 540 BL Motor
TPM-540A065 Thunder Power 6.5T Modified 540 BL Motor
TPM-540A075 Thunder Power 7.5T Modified 540 BL Motor
TPM-540A085 Thunder Power 8.5T Modified 540 BL Motor
TPM-540A095 Thunder Power 9.5T Modified 540 BL Motor

BRUSHLESS MOTORS CONT....

TPM-540A105 Thunder Power 10.5T Stock Spec 540 BL Motor
TPM-540A135 Thunder Power 13.5T Stock Spec 540 BL Motor
TPM-540A175 Thunder Power 17.5T Stock Spec 540 BL Motor
TPM-540A215 Thunder Power 21.5T Stock Spec 540 BL Motor

CHARGERS AND DISCHARGERS

CR031 UDC Charger Connector Set
CR114 UDC Balance Adaptor Set JST-XH to JST-EH 2-6S
CR149 Power Cable UAC40-50; USA-Cloverleaf
CR150 Power Cable UAC40-50; Europe - Cloverleaf
CR161 UAC50 Charger 12v/110-240v 6A
CR176 T Connector Female to EC3 Male Lead
G834 Charger 240v UK; 7.2/Tx/Croc 1.2-12v
GM3075.GB2S BSI Conv Plug; EU2-UK3 2.5A
GM6460 Power Supply 12v 25 Amp
GM6464 Ultramat 14 Mains/12v Charger
GM6468.GB Ultramat 16S + 3076
NR91400 Sigma Power Charger
NR91555 Stealth Touch Evolution Charger
NR93160 Nosram Power Supply 13.8V / 20A
NR95815 Nosram Universal Charging Lead-Tamiya/JST Plug
NR95816 Nosram Universal Chg Lead-2S Lipo H/Case/Bal Adpt
NR95817 Nosram Universal Chg Lead- US-Style Plug
TP1201P 100-240V AC - 12V DC, 1.0A Switching Adaptor TP103
TP1205P 100-240V AC-12V DC, 5.0A Switching Adaptor
TP14SAB-TPJXH Balance Conn Adaptor 2S-14S JST-XH - TP1430C
TP205V Thunder Power 2-5 Cell Lipo Smart Balancer
TP610C Thunder Power 10 Amp DC Balance Charger
TP610C-ACDC Thunder Power 10 Amp AC/DC Balance Charger
TP610C-BL2 Balance Conn Adaptor 2S/6S JST-XH 610C-ADC
TP820CD Dual Port 20A DC charger/Cycler
TP8SAB-TPJXH Balance Conn Adaptor Board 2S-8S JST-XH 820CD
TPDLC-250A Thunder Power Balancer to Charger Data Link Cable

ELECTRONICS

CR151 CODE 2.4G FHSS LCD 2 Stick TxRx
CR152 CODE 2.4G FHSS LCD - Rx Only
CR153 CODE 2.4G FHSS Sport 2 Stick TxRx
CR154 CODE 2.4G FHSS Sport - Rx Only
CR155 Antenna 2.4G
CR156 Servo 3.5kg 0.17 sec
CR162 CORE RC Sensor Checking Widget
ED199502 EDS Ultra Bright L.E.D. Light Stand
GM6458 Power Supply 5-15v 0-15Amp
GM6459 Power Supply 5-15v 0-20Amp
GM7987 Servo HBS 790 BB, MG
GM7990 Servo HBS 860 BB, MG
GM7991 Servo HBS 870 BB, MG
GM91539.M Power Cap 470uF 16v Anti Glitch
GM94050 GM Servo SLP High Voltage Brushless
GM94051 GM Servo SST High Voltage Brushless
GM94411 GM Soldering Station 90W ESD
GM968.50 GM Wet Protect - Aerosol

TEAM MERCHANDISE

ED199206 EDS Pit Towel 110 x 70cm
G310 Schumacher Rubber Pit Mat - 750mm x 500mm
G337 Coffee Mug - Schumacher Logo

TEAM MERCHANDISE CONT....

G338 2 Tone Beanie Knitted Hat
G338 2 Tone Beanie Knitted Hat
G339L Jacket - 3 Layer Softshell; Black - L 44inch
G339M Jacket - 3 Layer Softshell; Black - M 41inch
G339S Jacket - 3 Layer Softshell; Black - S - 38inch
G339XL Jacket - 3 Layer Softshell; Black - XL 46inch
G339XS Jacket - 3 Layer Softshell; Black - XS - 34inch
G339XXL Jacket - 3 Layer Softshell; Black - XXL 48inch
G339XXXL Jacket - 3 Layer Softshell; Black - XXXL 50inch
G340 Schumacher Baseball Cap - Black
G341 Schumacher Flat bill Cap - Black
G342L T - Navy - Large 100% cotton knit mens
G342M T - Navy - Medium 100% cotton knit mens
G342S T - Navy - Small 100% cotton knit mens
G342XL T - Navy - X-Large 100% cotton knit mens
G342XXL T - Navy - XX-Large 100% cotton knit mens
G342XXXL T - Navy - XXX-Large 100% cotton knit mens
G342XXXXL T - Navy - XXXX-Large 100% cotton knit mens
G342XXXXXL T - Navy - XXXXX-Large 100% cotton knit mens
G343L Sweat-Navy-Large 80% cotton,20% polyester knit men
G343M Sweat-Navy-Med, 80% cotton,20% polyester knit men
G343S Sweat-Navy-Small,80% cotton,20% polyester knit men
G343XL Sweat-Navy-XL, 80% cotton,20% polyester knit men
G344L Polo - Navy - Large, 100% cotton knit mens
G344M Polo - Navy - Med, 100% cotton knit mens
G344S Polo - Navy - Small, 100% cotton knit mens
G344XL Polo - Navy - X-Large, 100% cotton knit mens
G344XXL Polo - Navy - XX-Large, 100% cotton knit mens
G344XXXL Polo - Navy - XXX-Large, 100% cotton knit mens
G344XXXXL Polo - Navy - XXXX-Large, 100% cotton knit mens
G344XXXXXL Polo - Navy - XXXXX-Large, 100% cotton knit mens
G351 Schumacher Thermo Mug
G352 Schumacher Umbrella
NR96398 Nosram Pit Towel 2

GENERAL ACCESSORIES

CR043 CORE RC - Silver X-Weights 16pcs
CR058 CORE RC - Black X-Weights 16pcs
CR119 Heatshrink 1.5mm dia Black - 20pcs
CR120 Heatshrink 2.0mm dia Black - 20pcs
MR-CSONROAD MR33 Car Stand On Road

Step 32 B

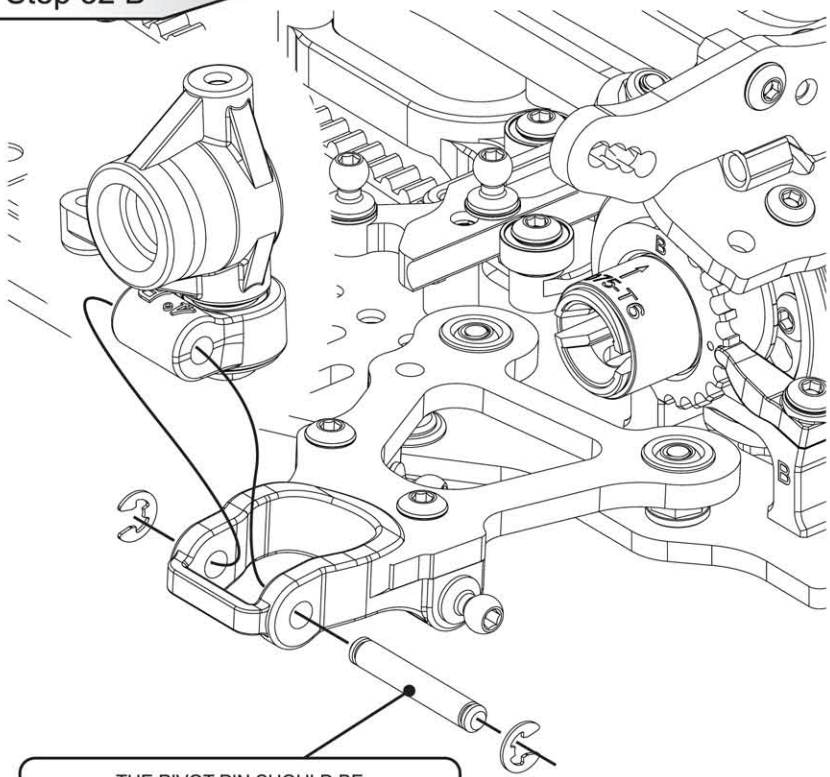

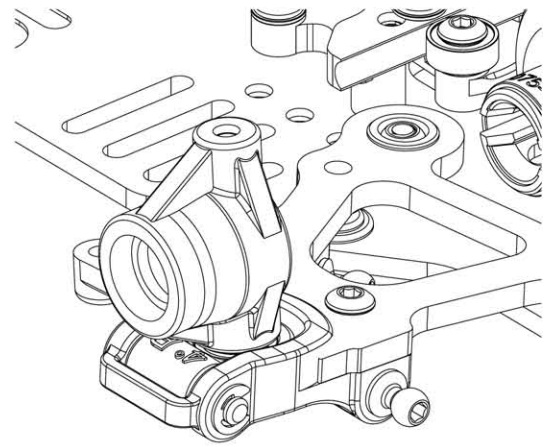

THE PIVOT PIN SHOULD BE
A TIGHT FIT IN THE WISHBONE AND
THE CASTOR BLOCK SHOULD PIVOT FREELY

Step 33

x 4
M3 x 8

x 4
Ball Stud
Short

x 2
M3 Nyloc
Black Alloy

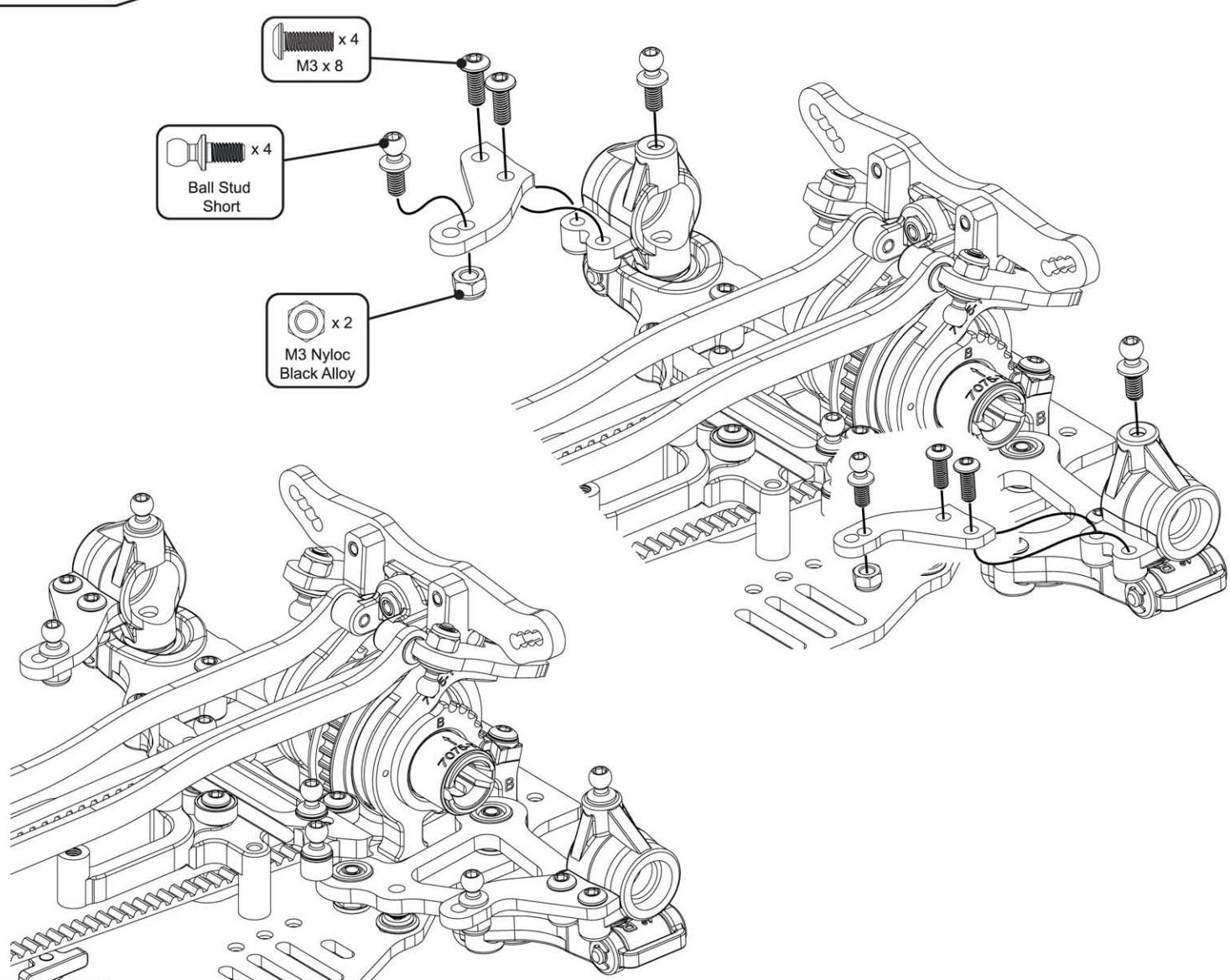

Step 34 A

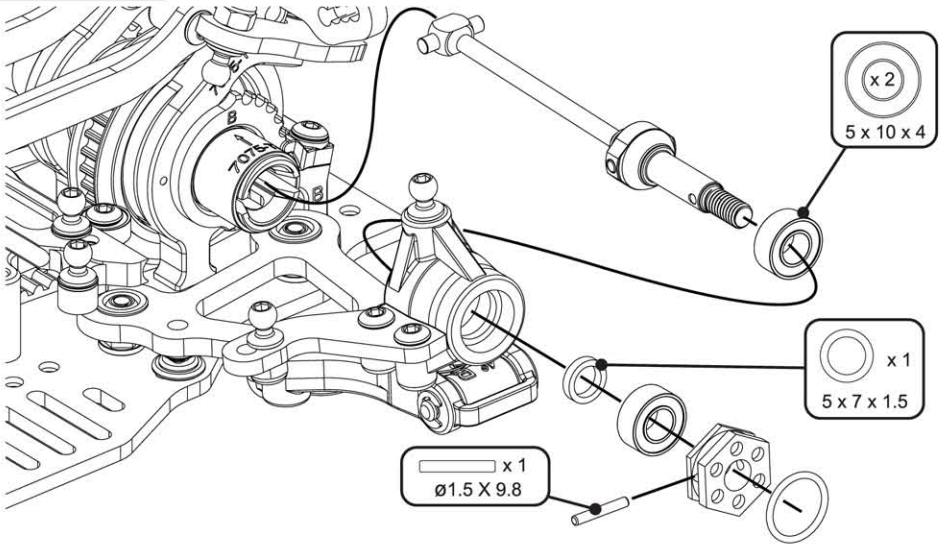

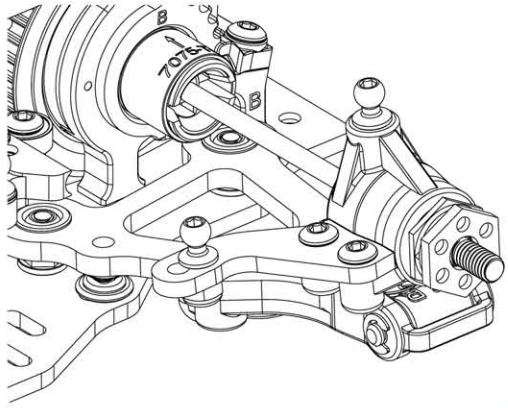

Step 34 B

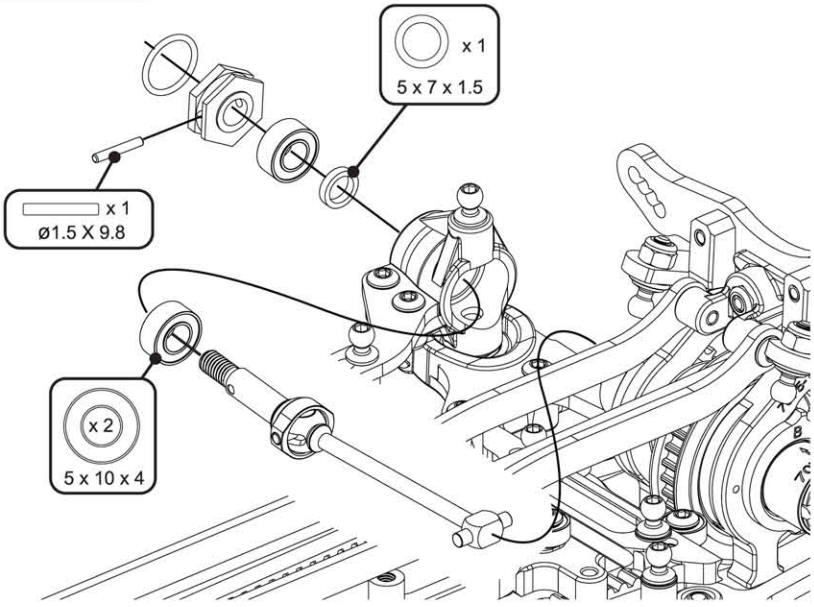

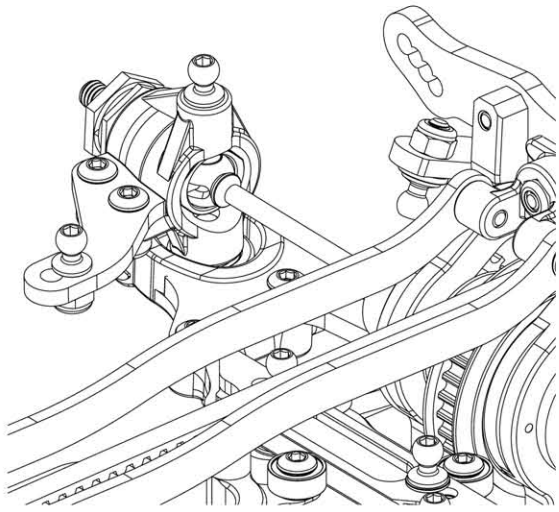

Step 35 A

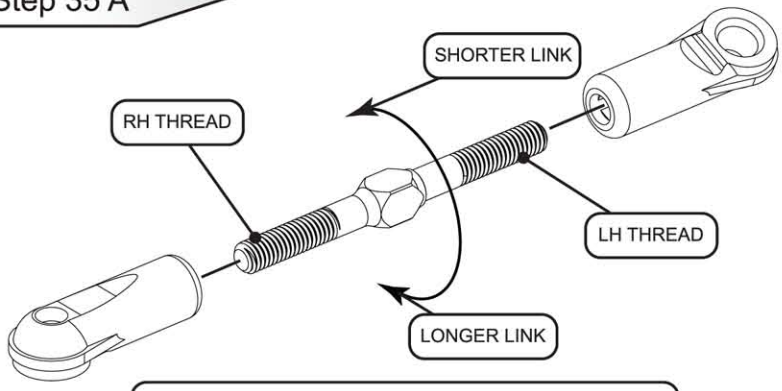

CAREFULLY SCREW THE SOCKETS ON TO THE TURNBUCKLE UNTIL NO THREADS ARE VISIBLE. THEN UNDO THEM TO THE DESIRED LENGTH. THIS ALLOWS FOR EASIER ADJUSTMENT ON THE CAR. (GREASING THE THREADS WILL ALSO HELP)

NOTE THE SHAPE OF THE TURNBUCKLE THIS SIDE OF THE TURNBUCKLE IS THE LEFT HAND THREAD.

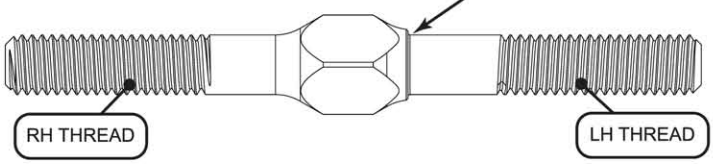

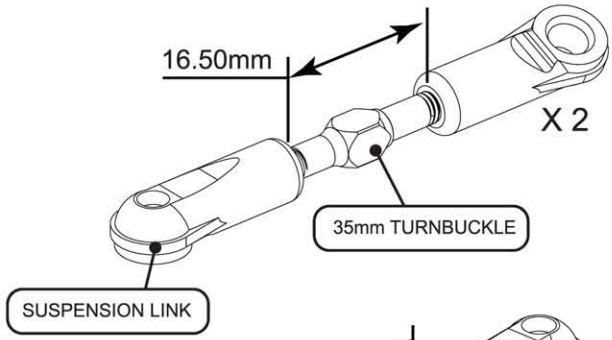

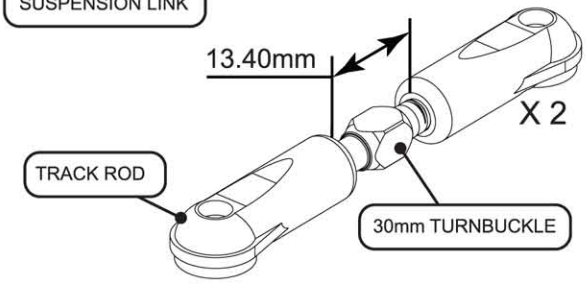

IMPORTANT
SEE STEP 35B BEFORE YOU ASSEMBLE THESE TO YOUR CAR

Step 35 B

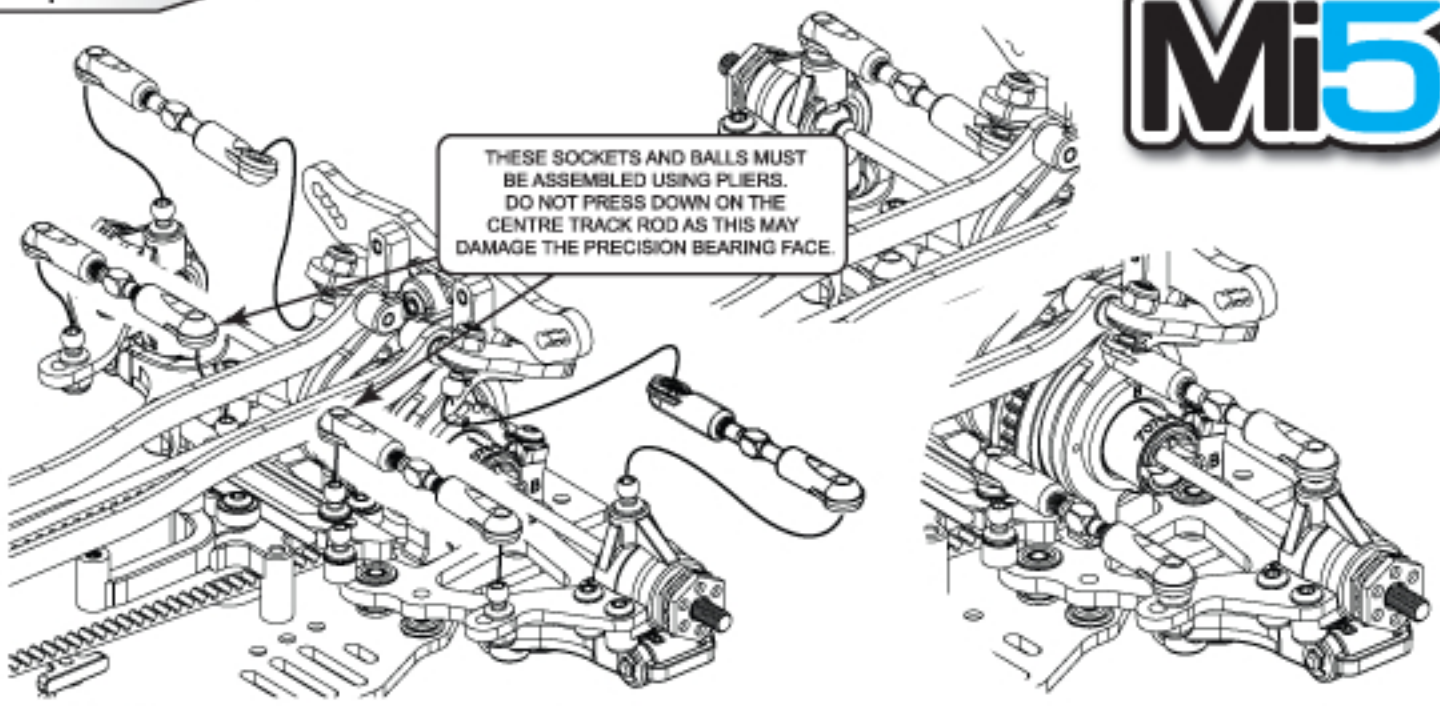

Step 36 A

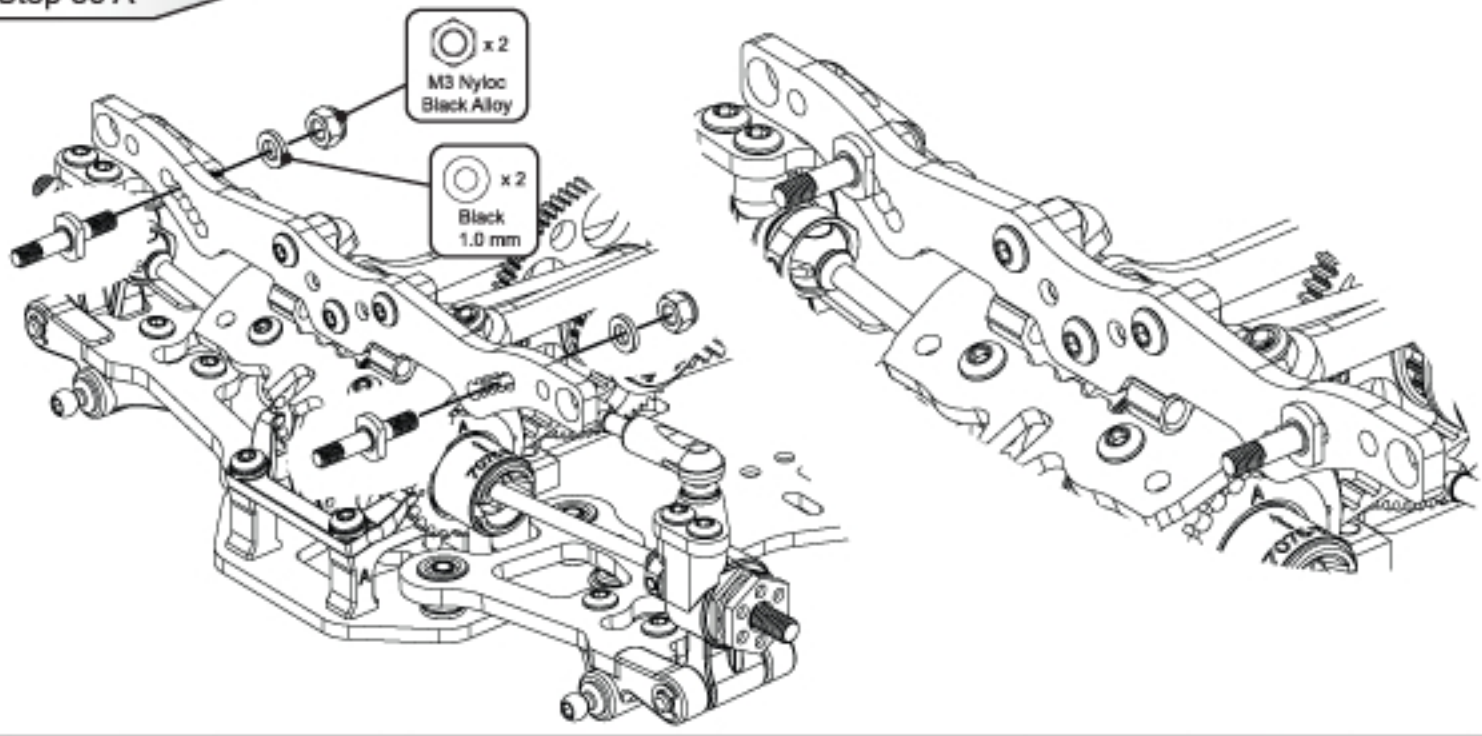

Step 36 B

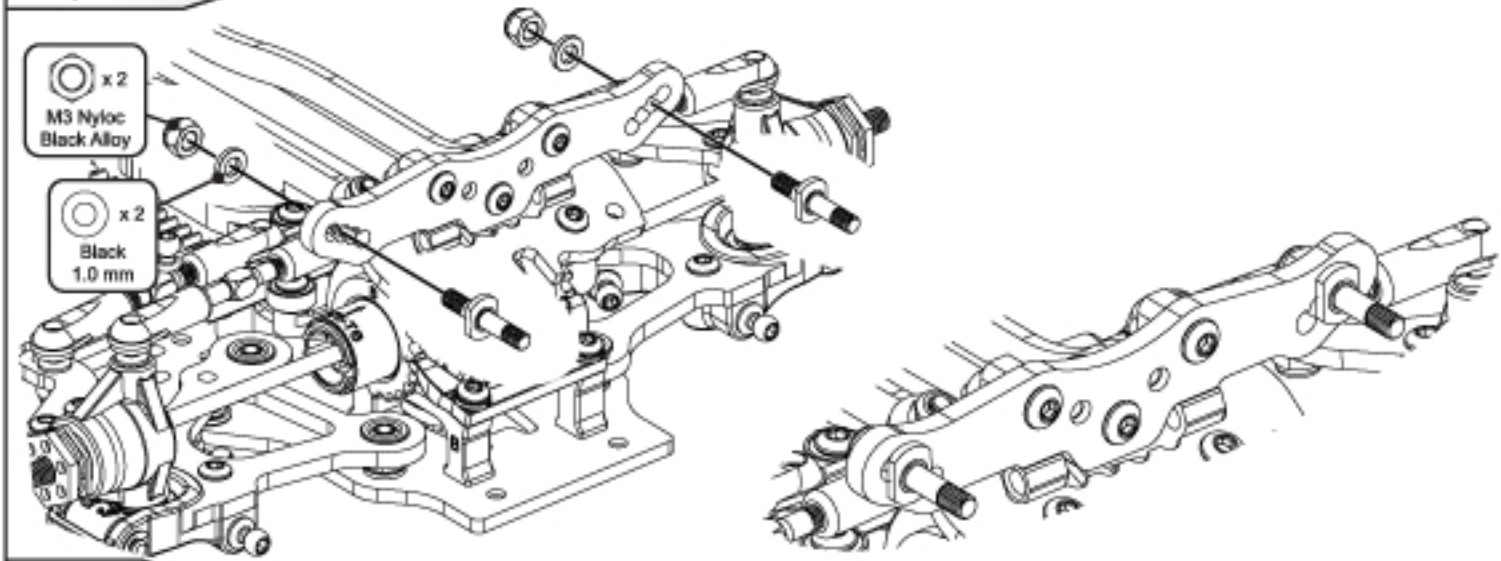

Step 37

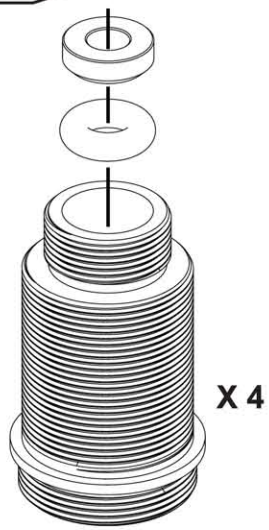

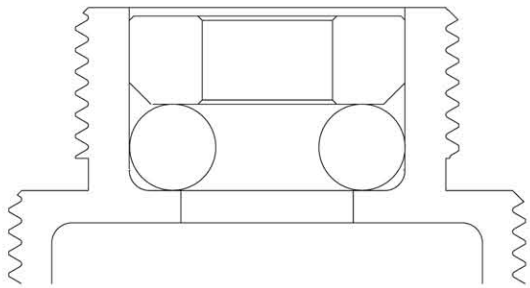

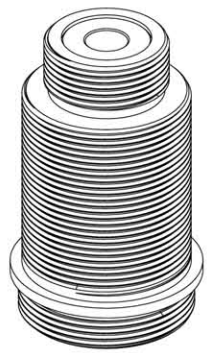

Step 38

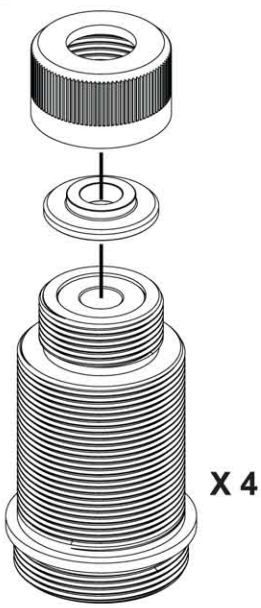

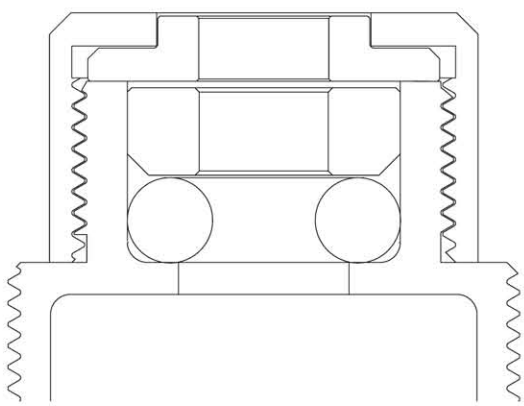

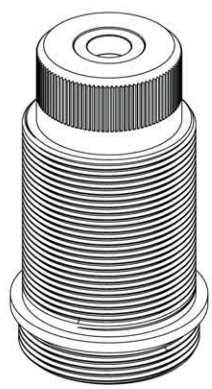

Step 39 A

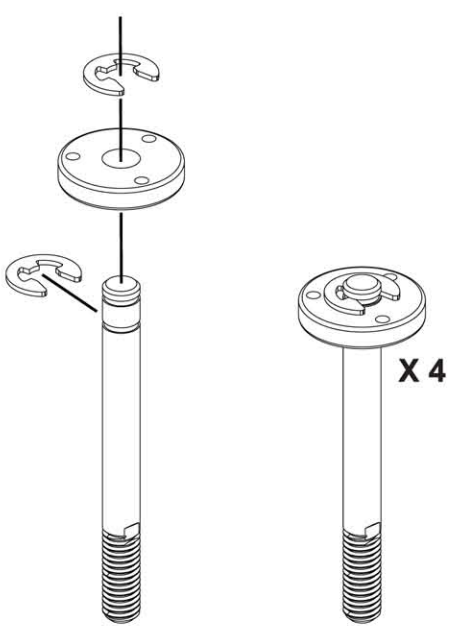

Step 39 B

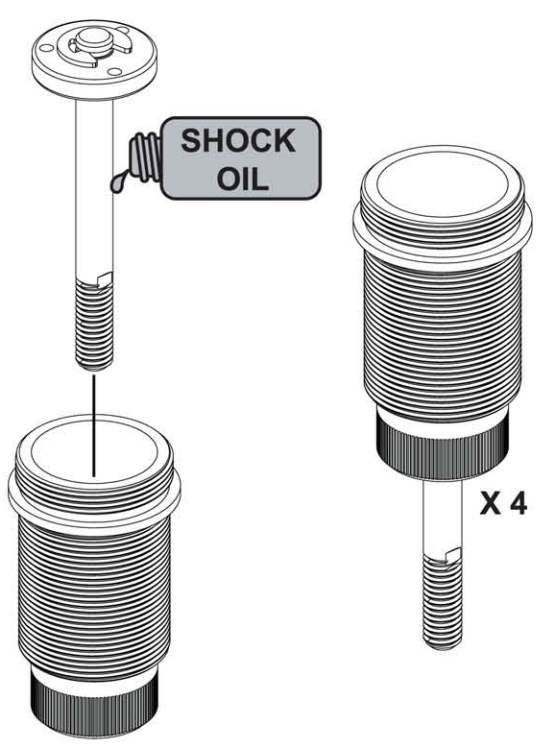

Step 40 A

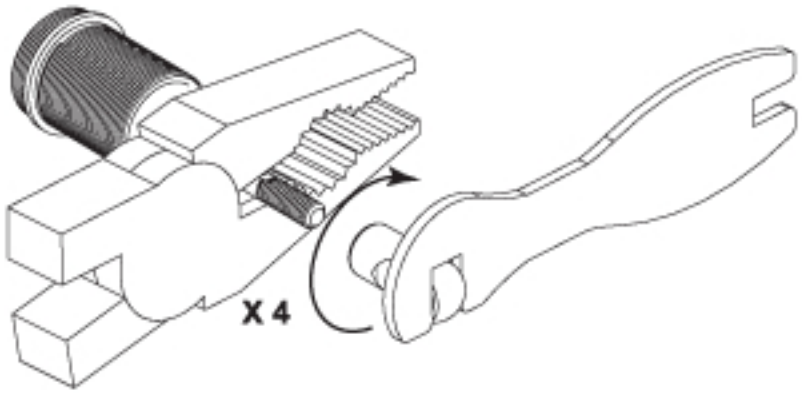

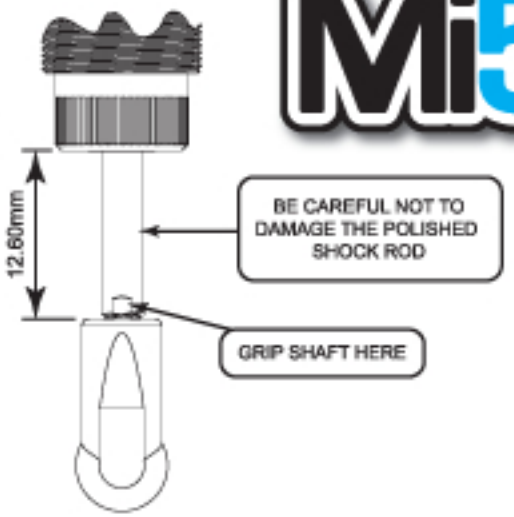

Step 40 B

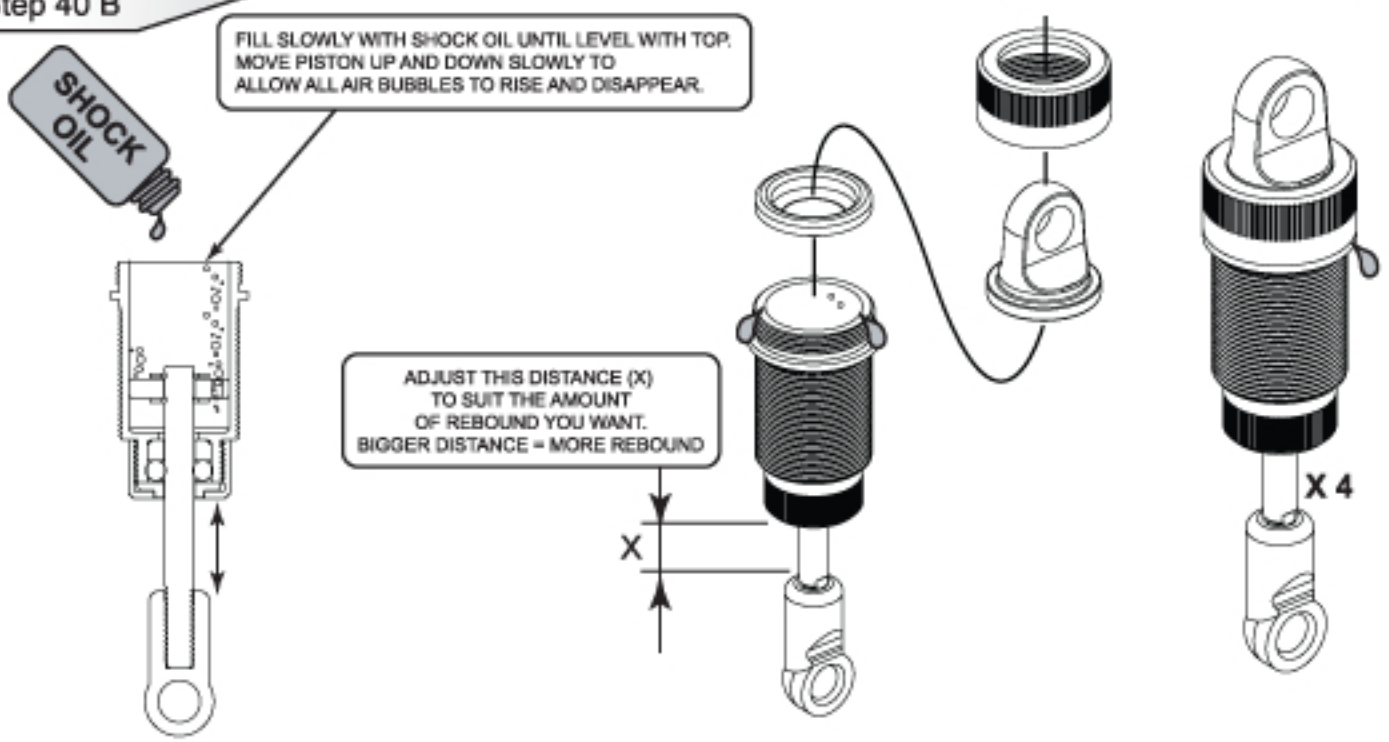

Step 41

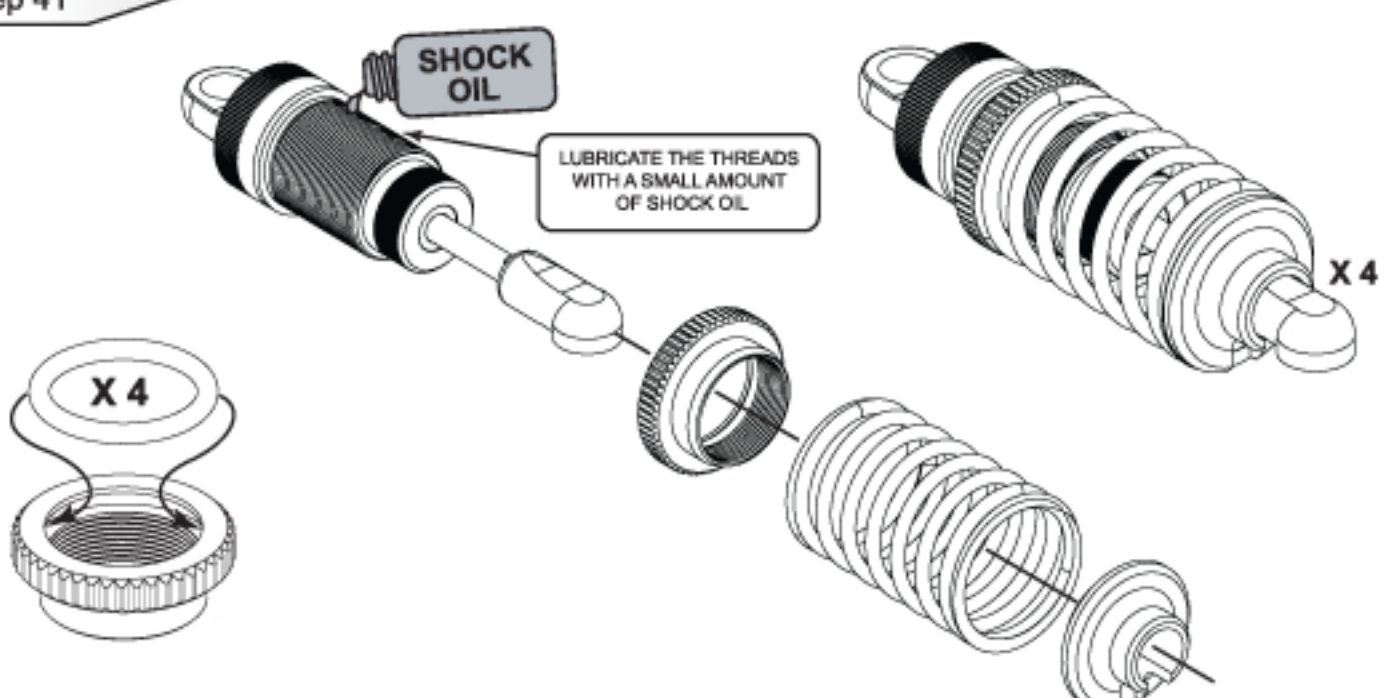

Step 42 A

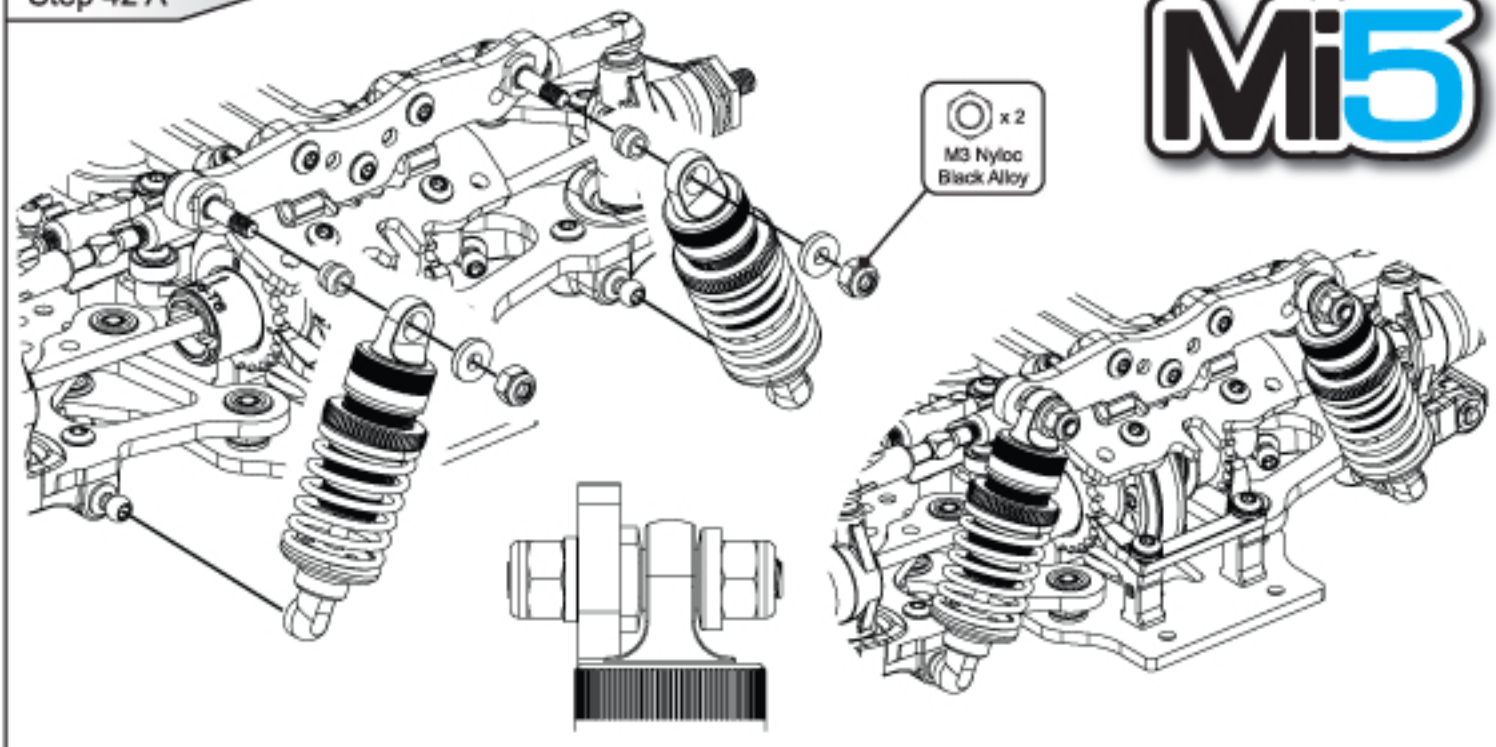

Step 42 B

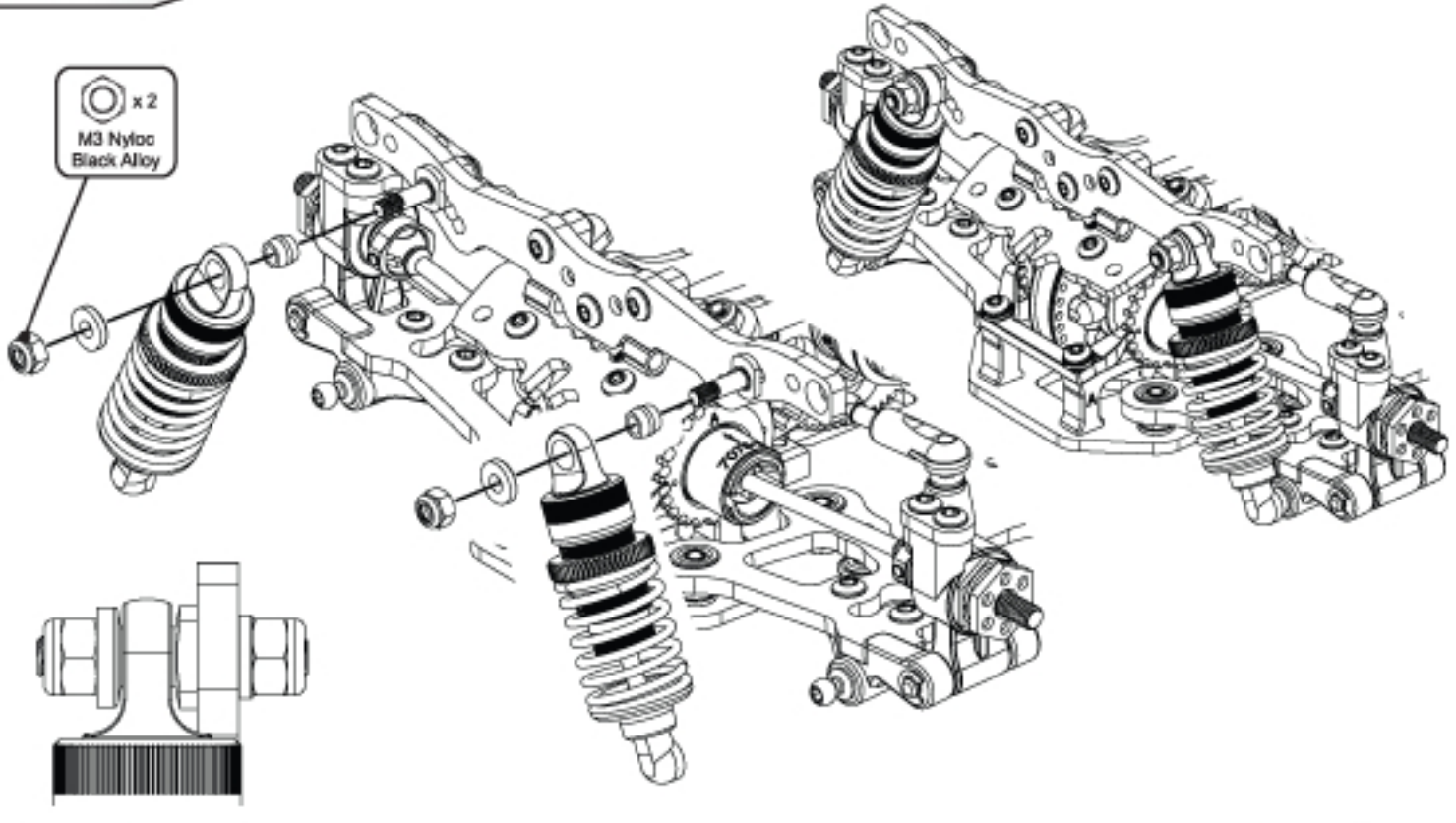

Step 43 A

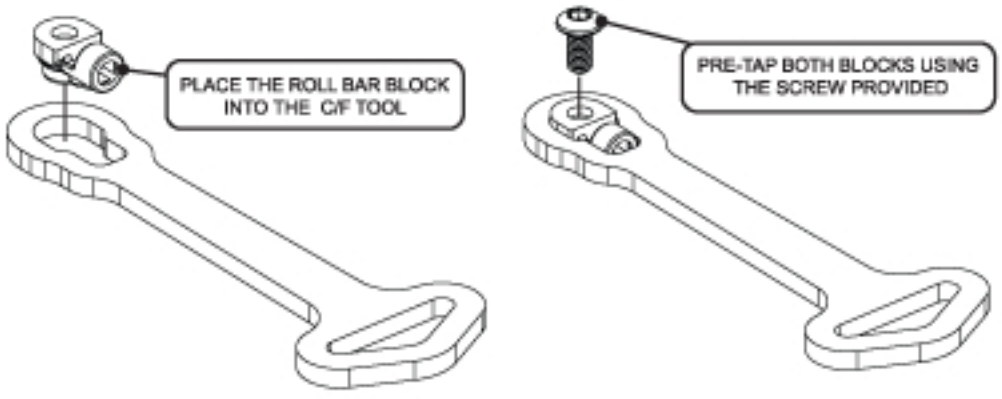

Step 43 B

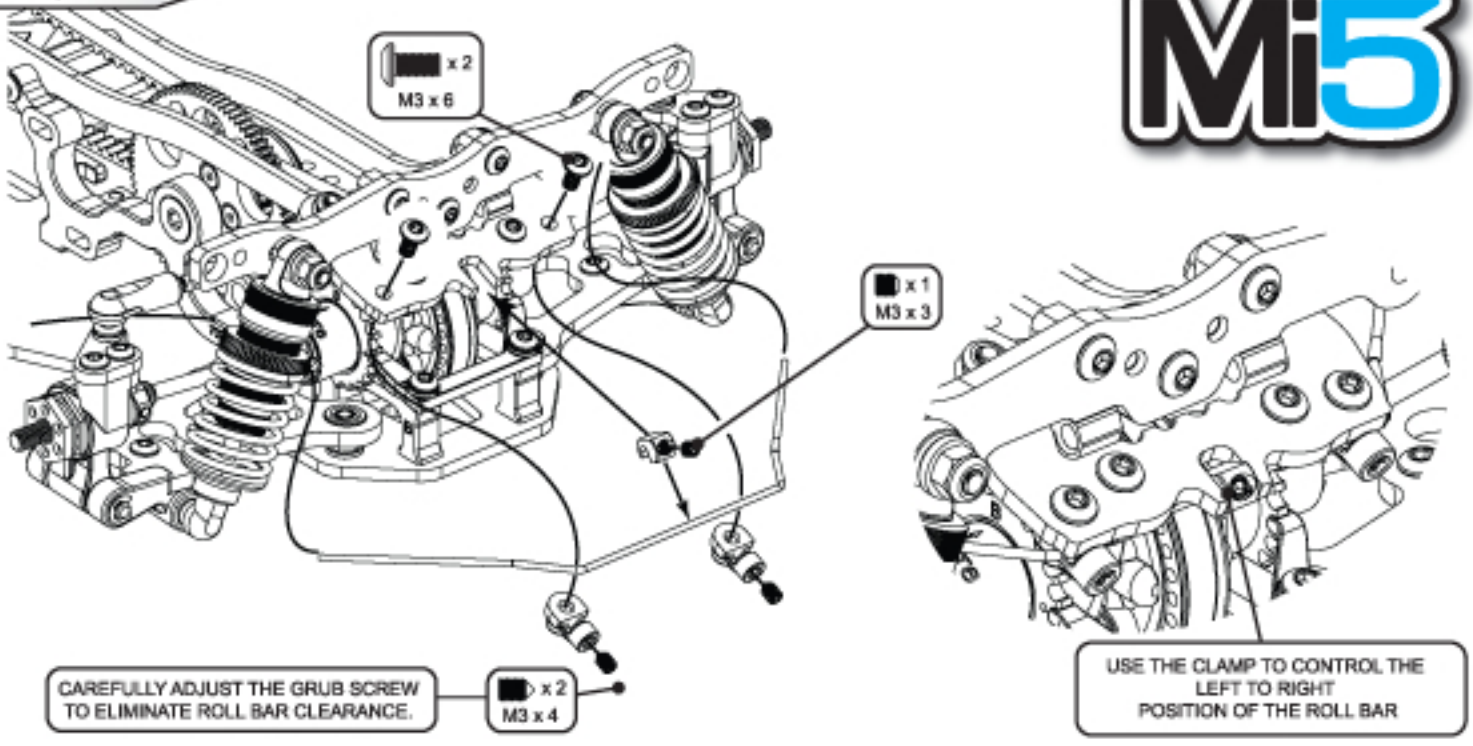

Step 44 A

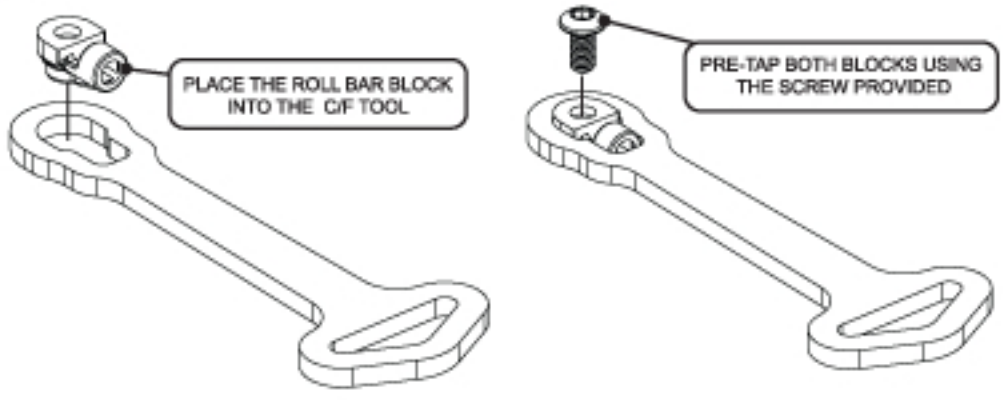

Step 44 B

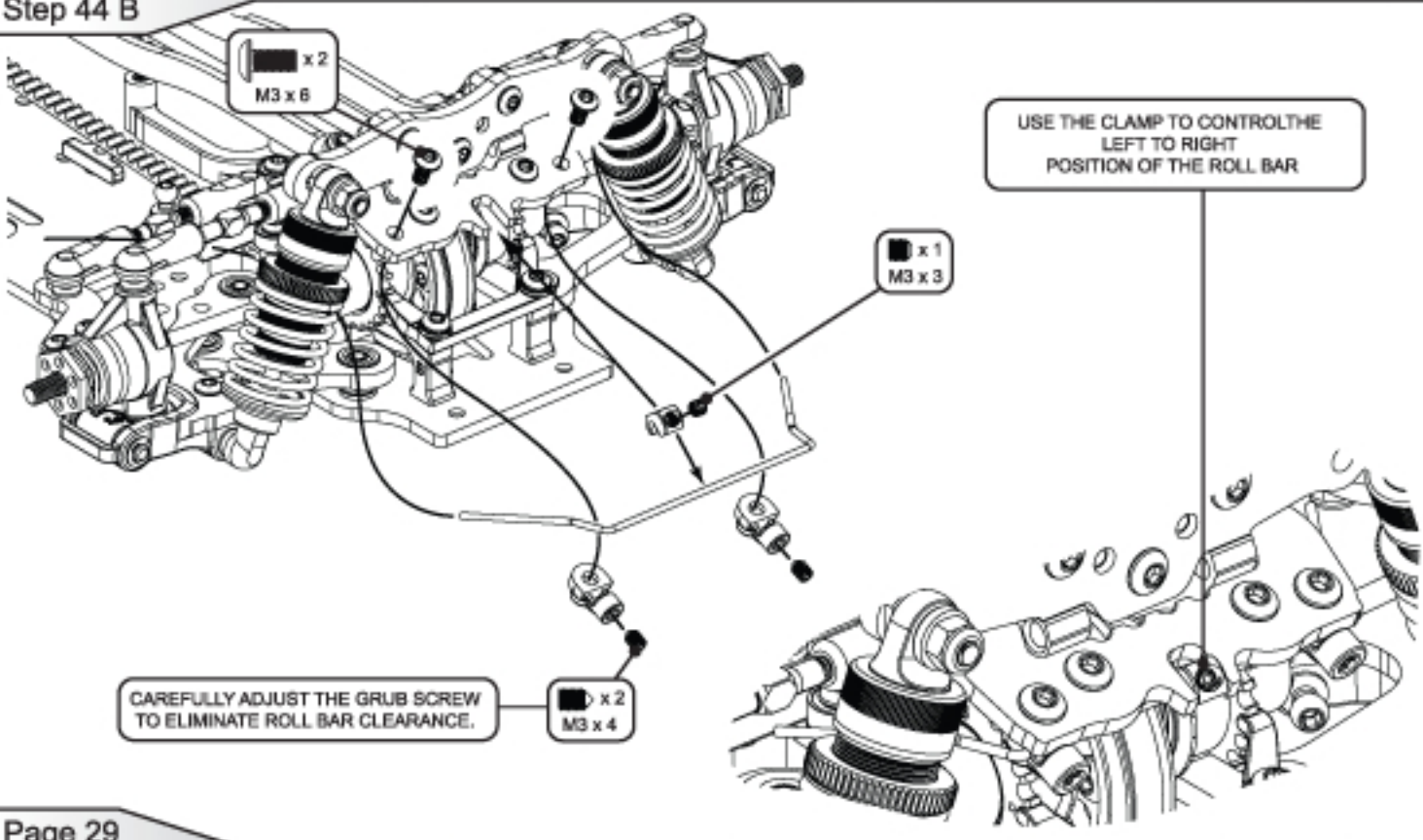

Step 45 A

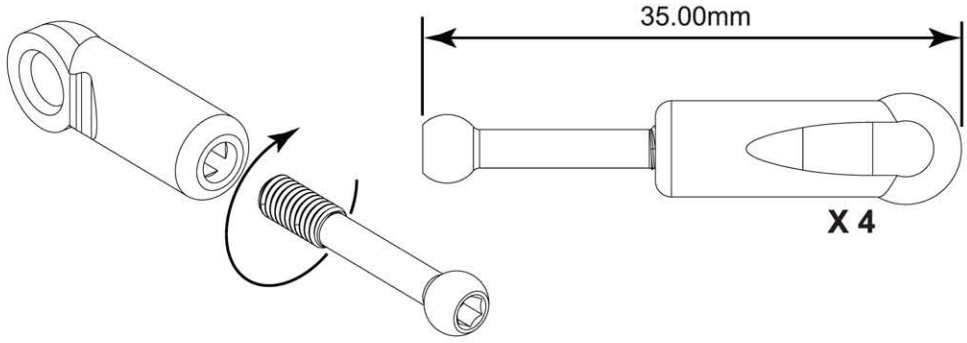

Step 45 B

REAR LINKS

ASSEMBLE BOTH SIDES.
ADJUST THE ROLL BAR SOCKET POSITION
SO THAT THE LINKS ARE AS SHOWN

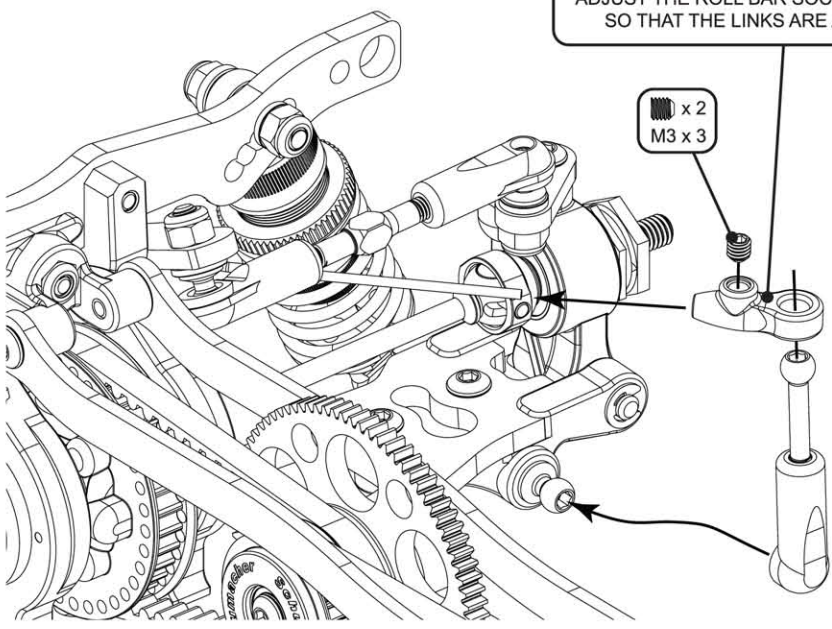

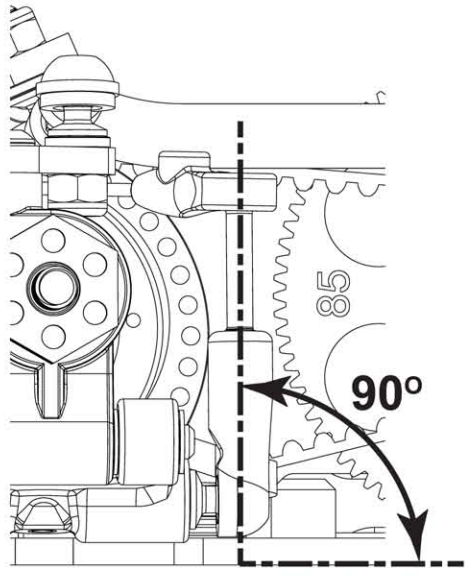

Step 45 C

SOME PARTS HAVE BEEN REMOVED FOR ILLUSTRATION PURPOSES ONLY

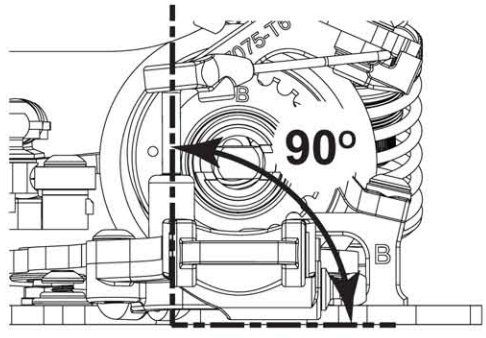

FRONT LINKS

ASSEMBLE BOTH SIDES.
ADJUST THE ROLL BAR SOCKET POSITION
SO THAT THE LINKS ARE AS SHOWN

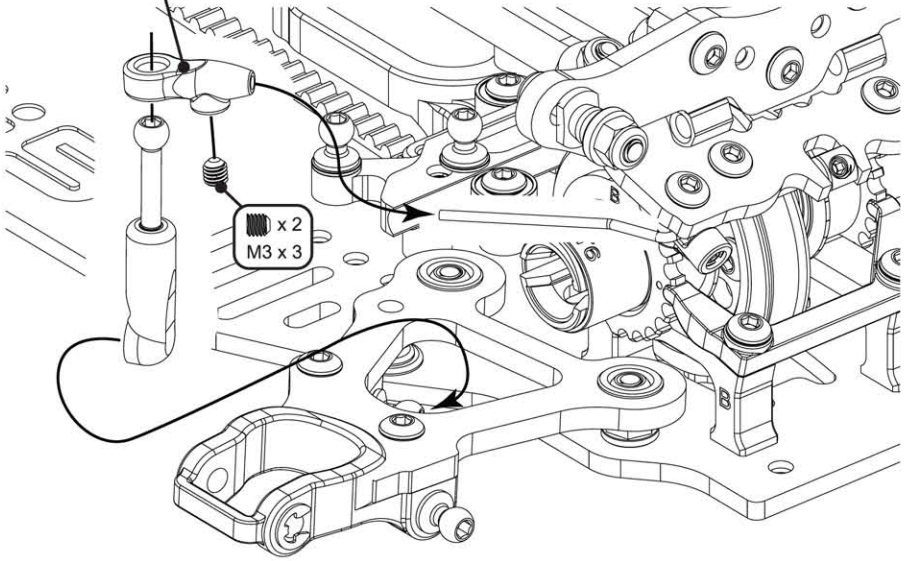

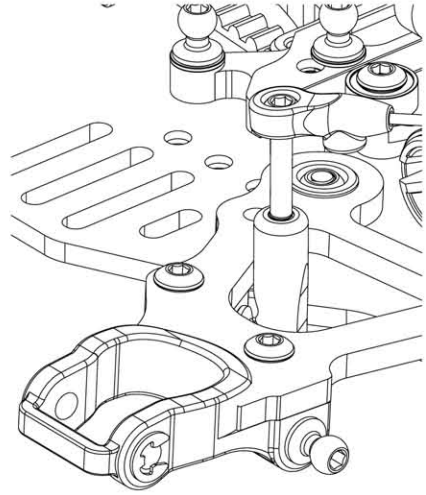

Step 46

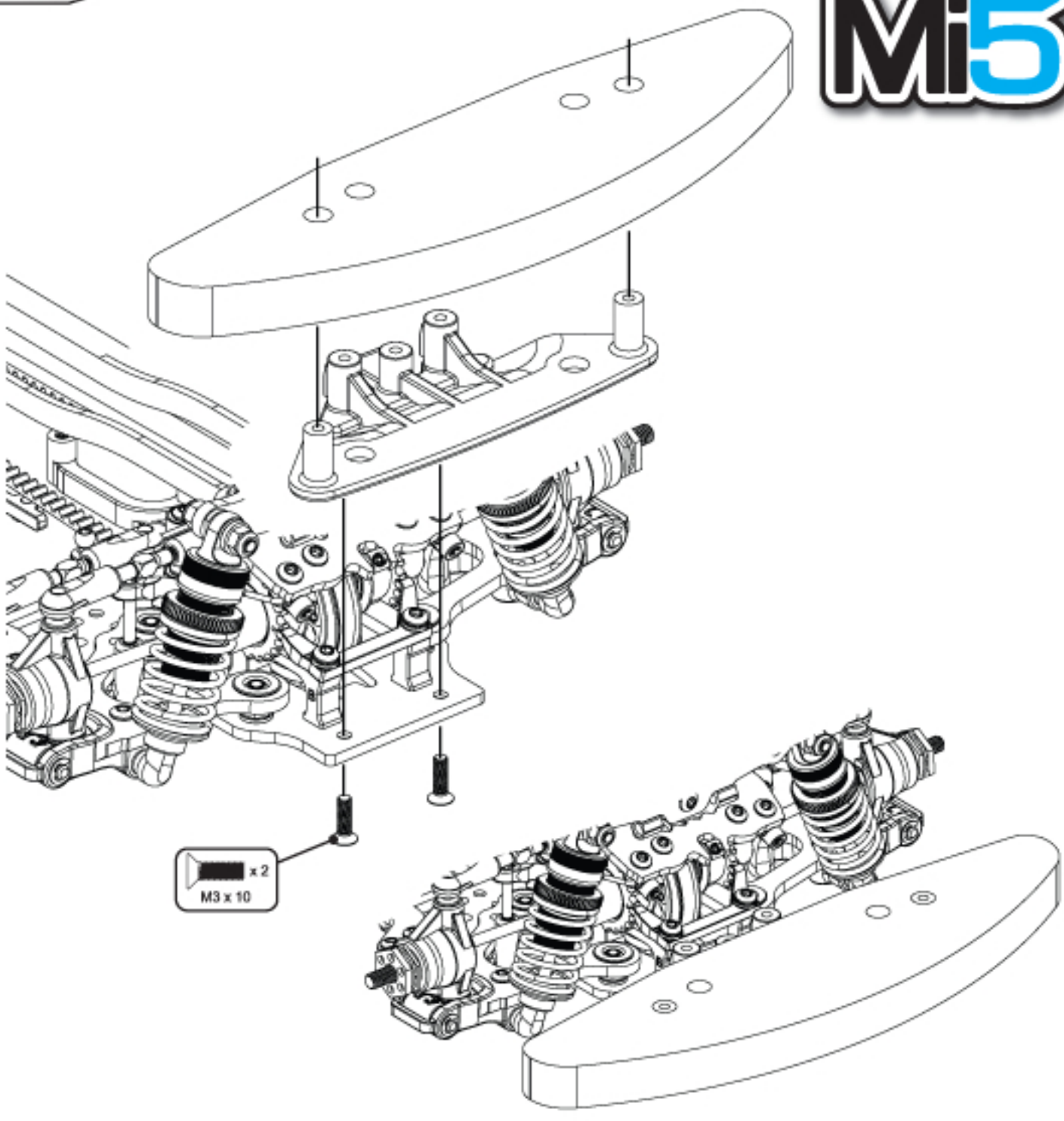

Step 47

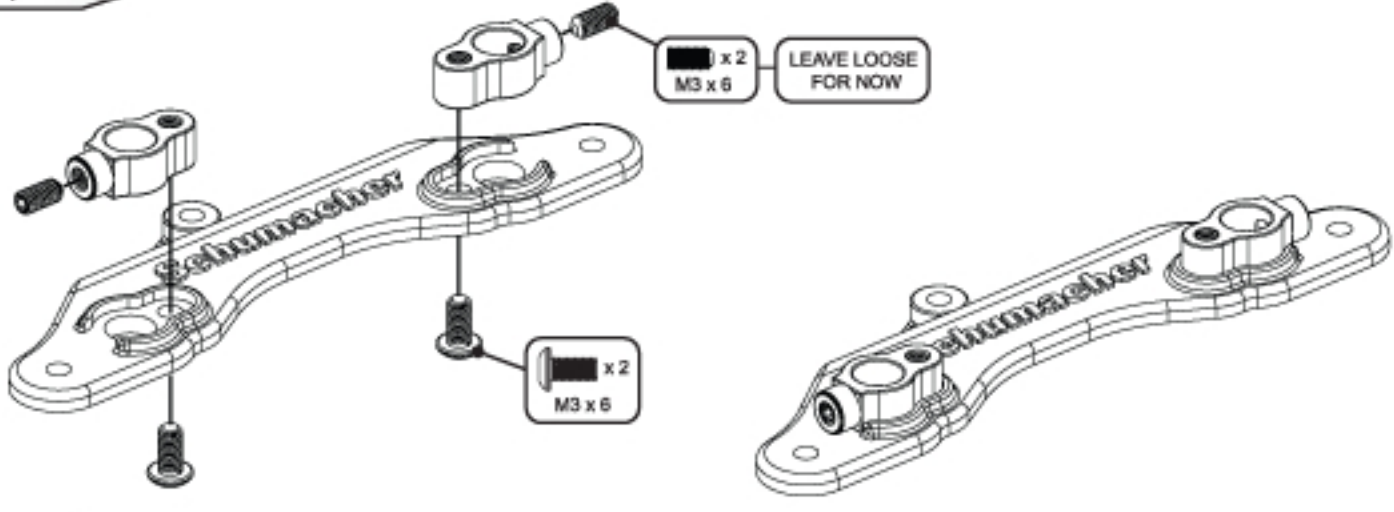

Step 48

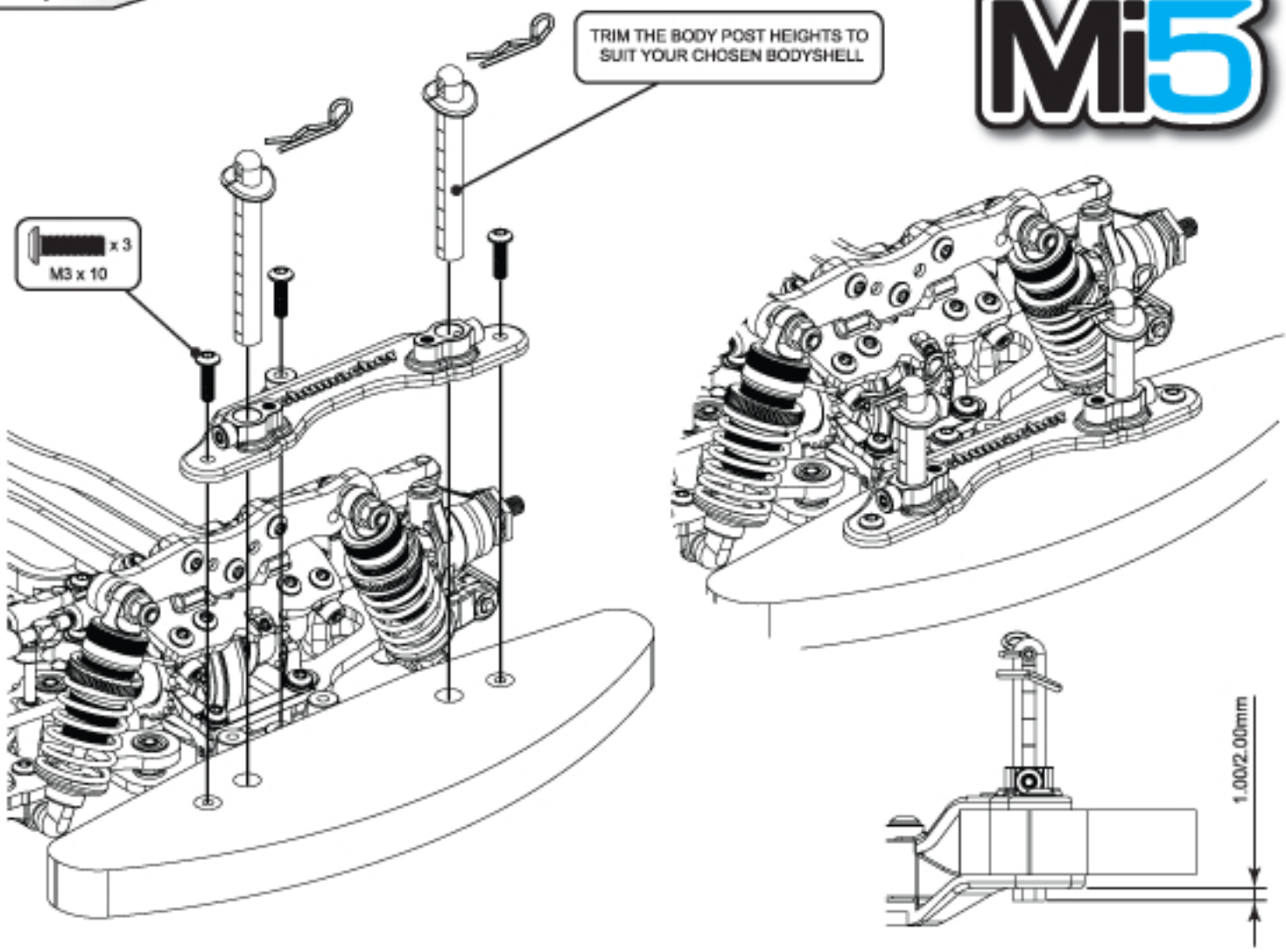

Step 49

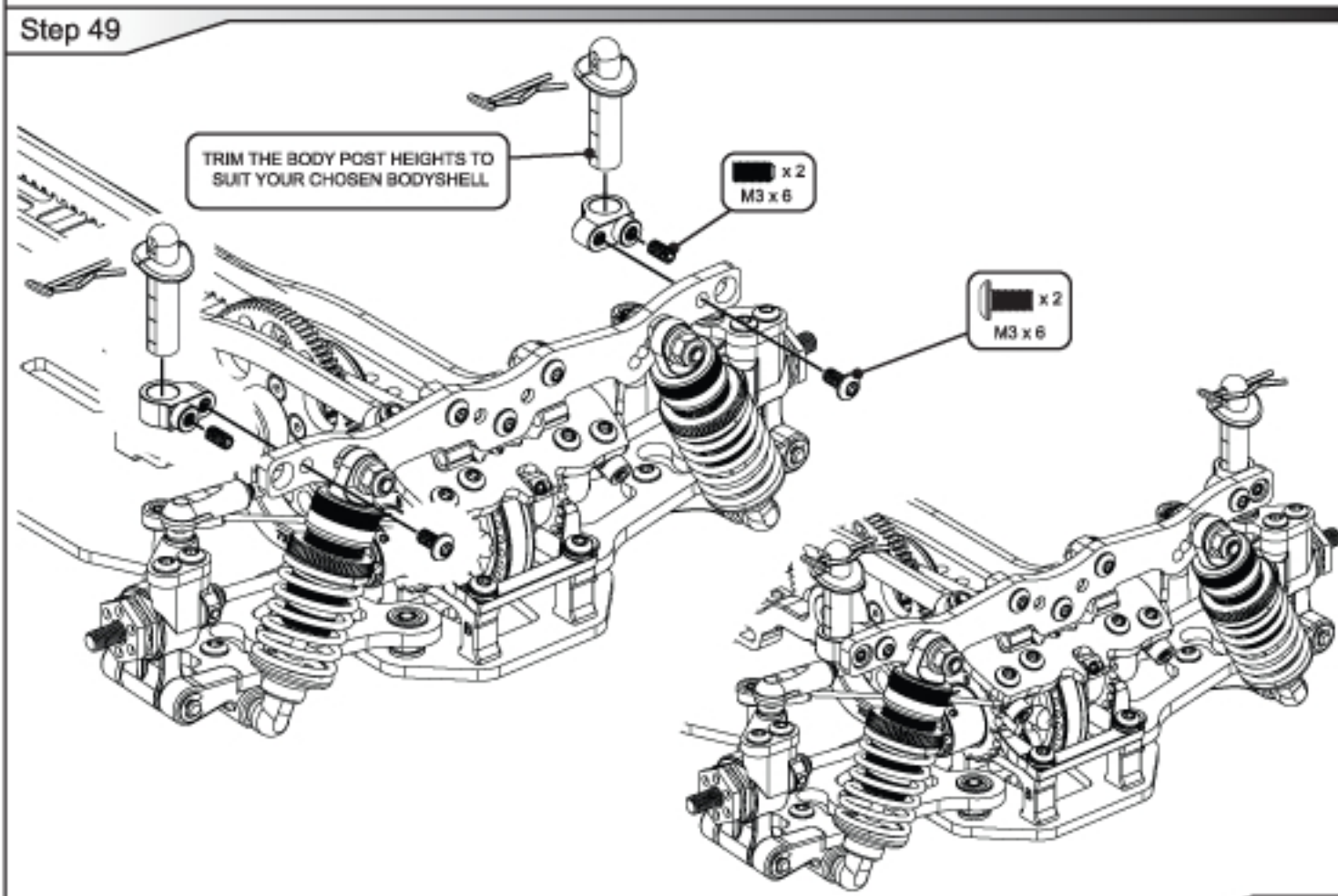

Step 50

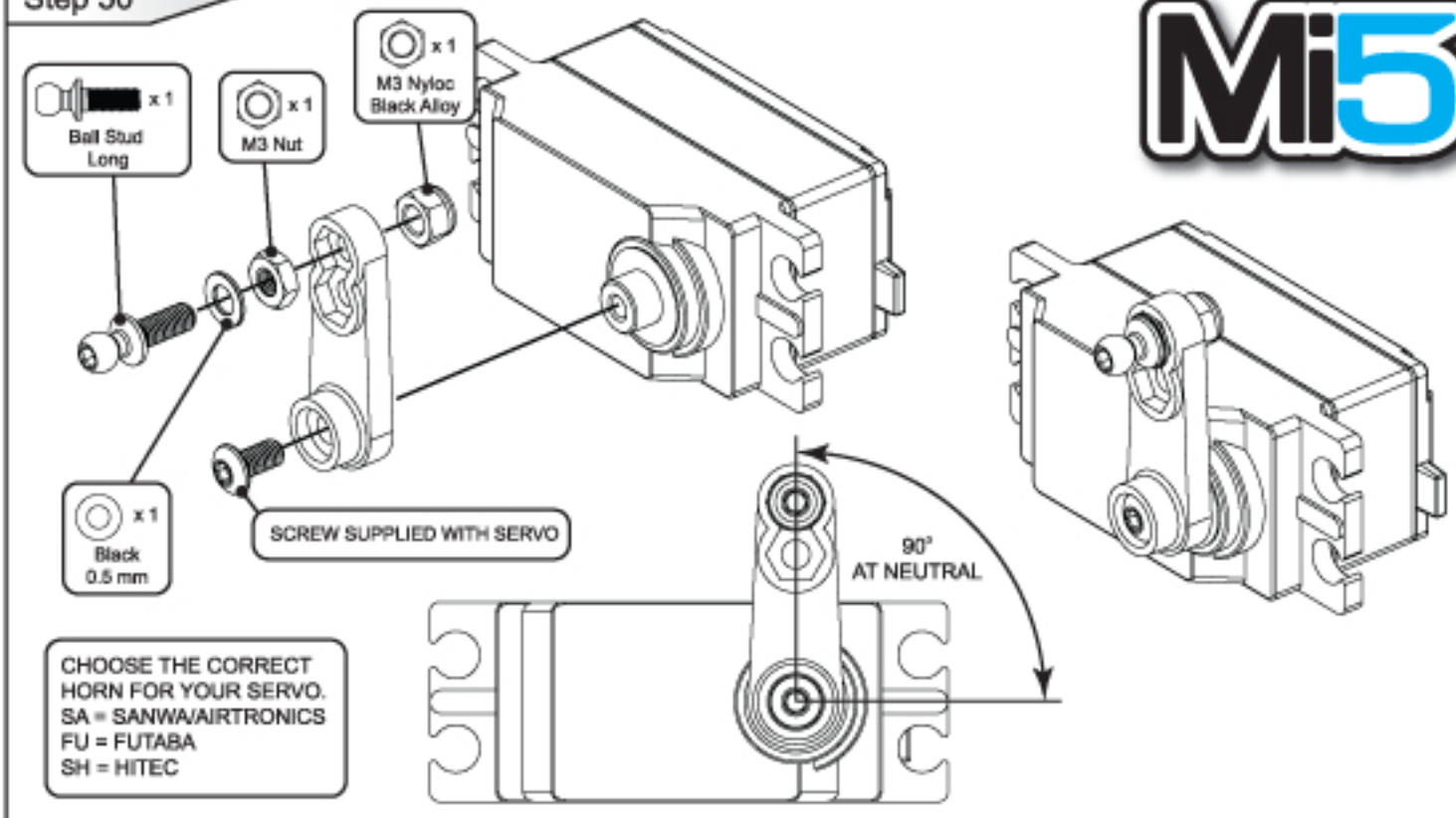

CHOOSE THE CORRECT HORN FOR YOUR SERVO.
SA = SANWA/AIRTRONICS
FU = FUTABA
SH = HITEC

Step 51

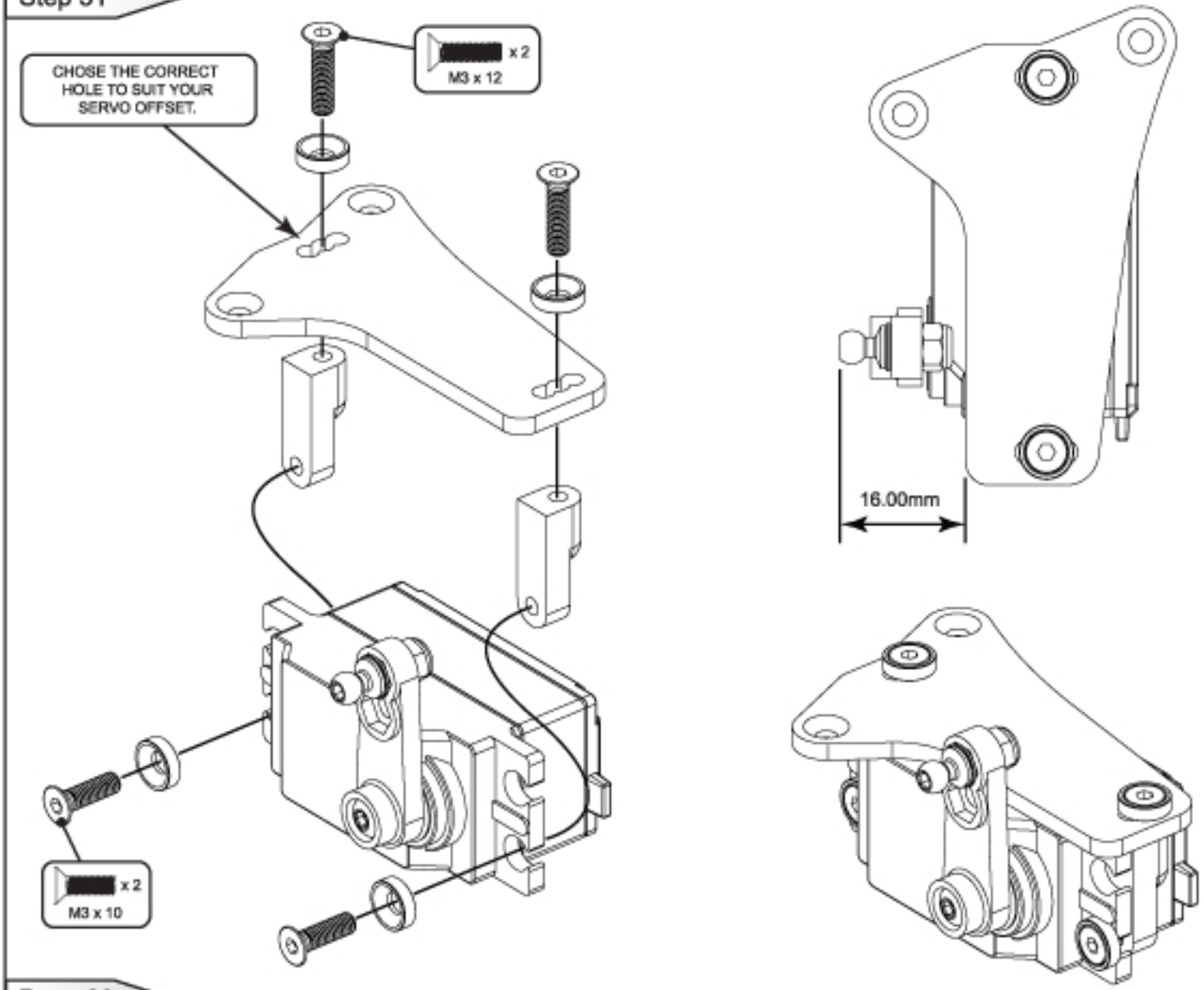

Step 52 A

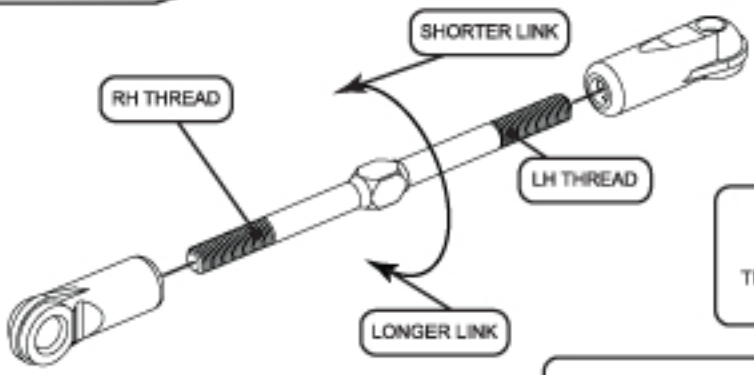

CAREFULLY SCREW THE SOCKETS ON TO THE TURNBUCKLE UNTIL NO THREADS ARE VISIBLE. THEN UNDO THEM TO THE DESIRED LENGTH. THIS ALLOWS FOR EASIER ADJUSTMENT ON THE CAR. (GREASING THE THREADS WILL ALSO HELP)

NOTE THE SHAPE OF THE TURNBUCKLE THIS SIDE OF THE TURNBUCKLE IS THE LEFT HAND THREAD.

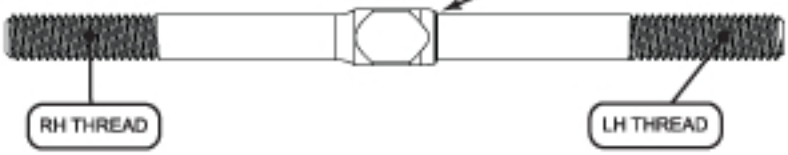

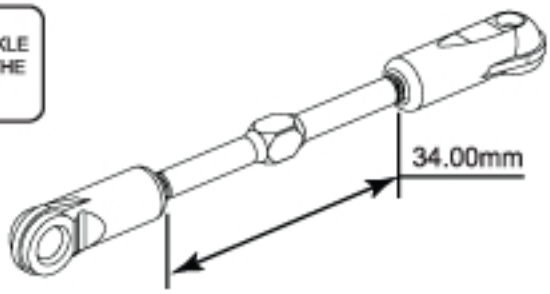

Step 52 B

THIS SOCKET MUST BE ASSEMBLED USING PLIERS. DO NOT PRESS DOWN ON THE CENTRE TRACK ROD AS THIS MAY DAMAGE THE PRECISION BEARING FACE.

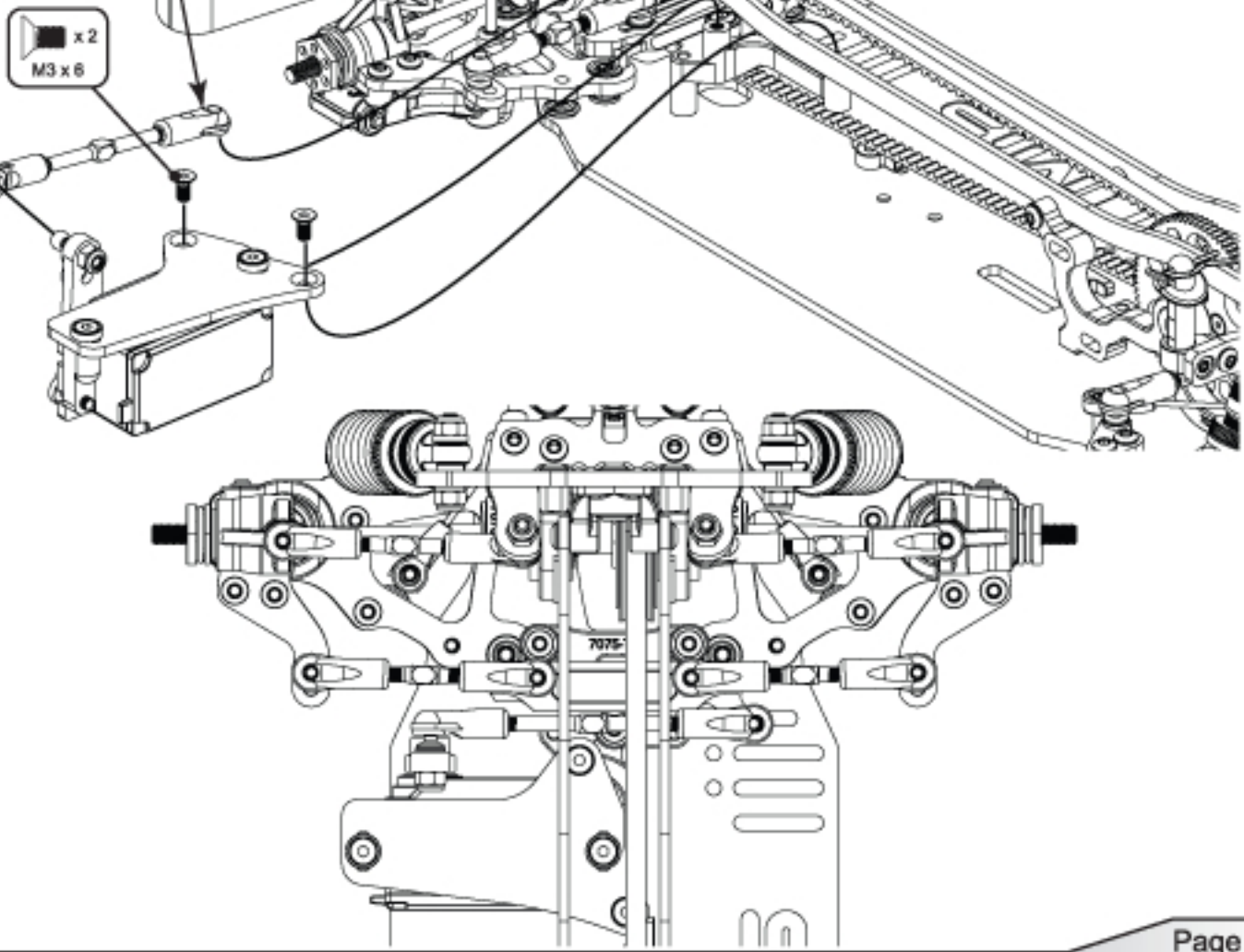

Step 53

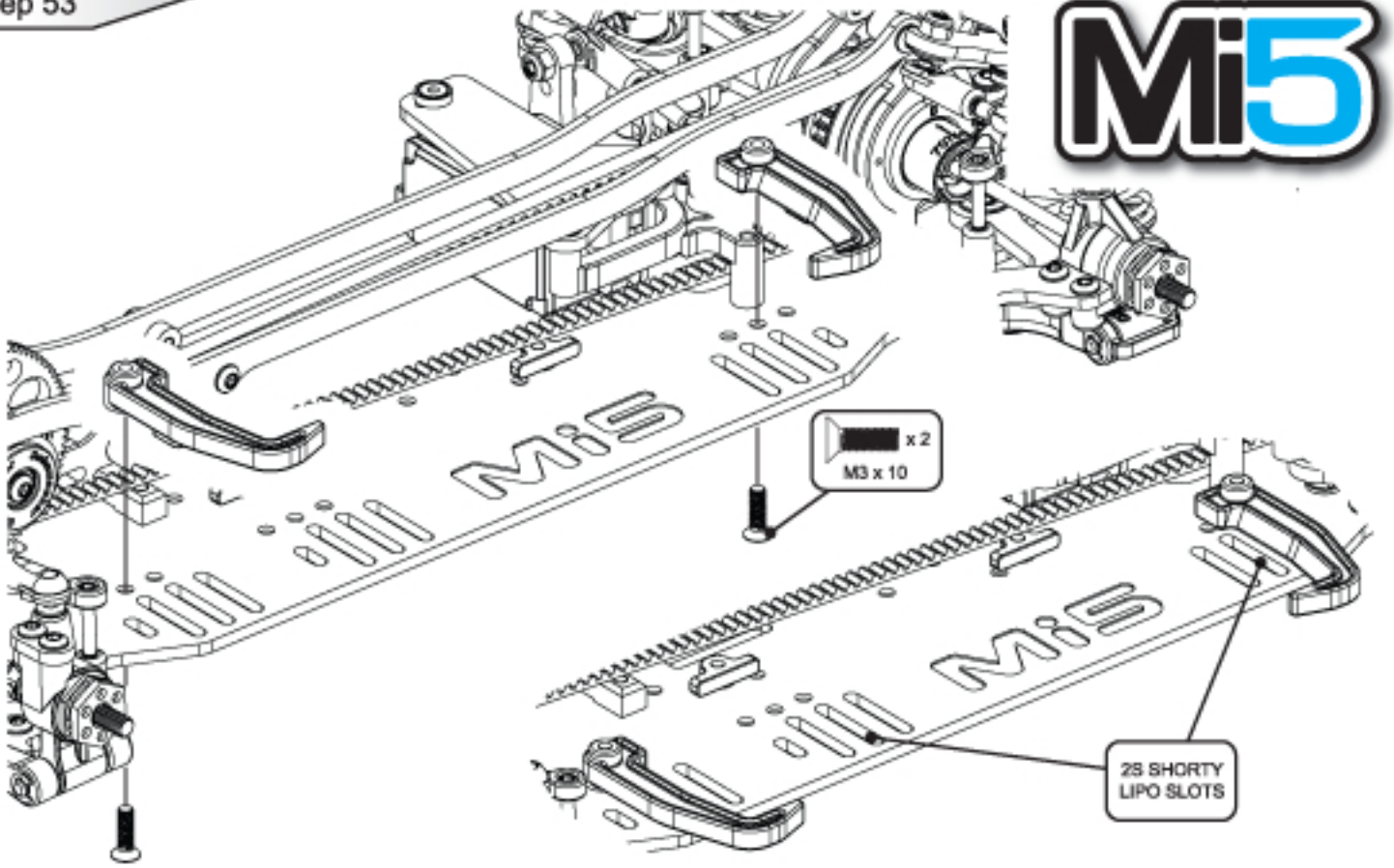

Step 54

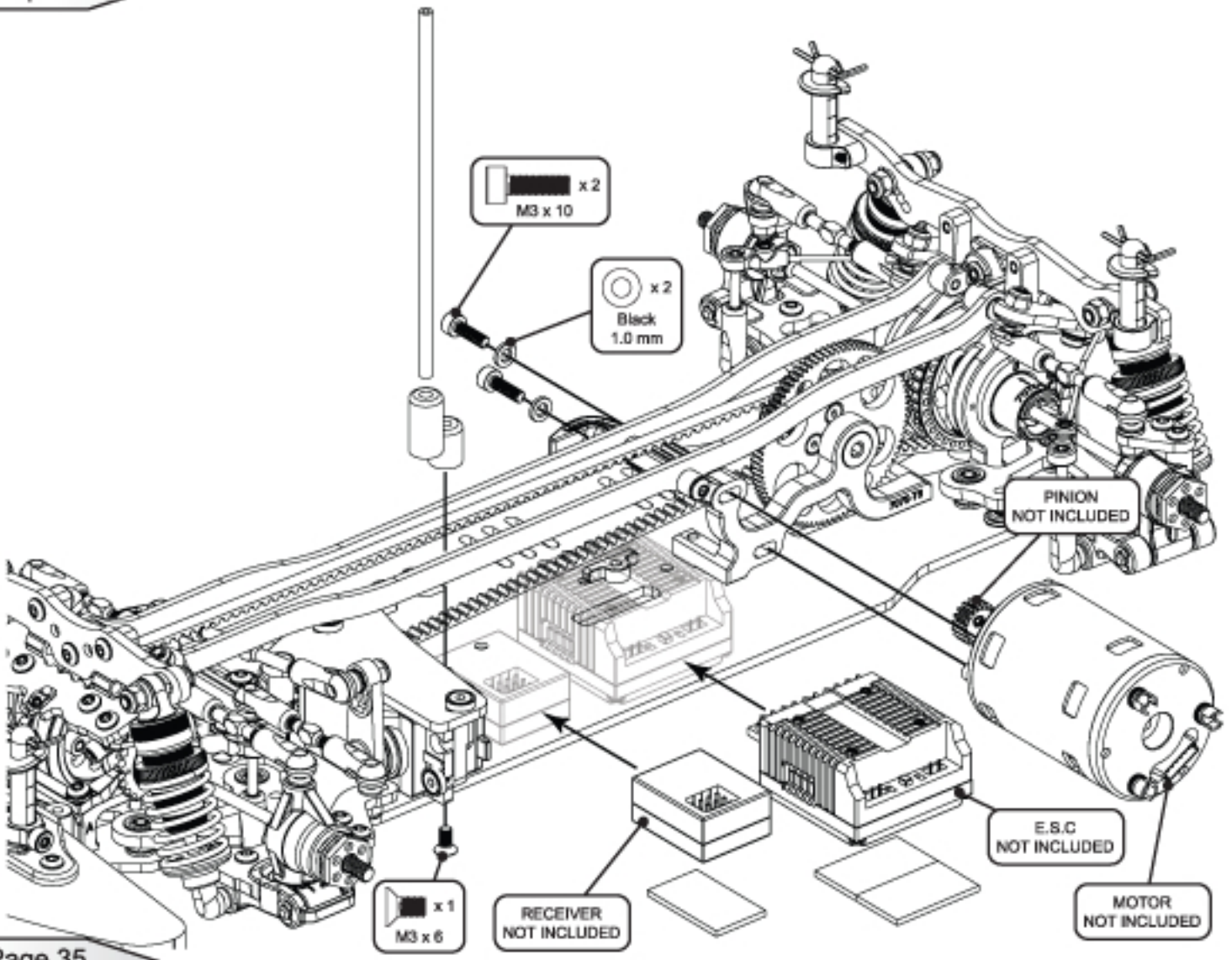

LiPo Installation

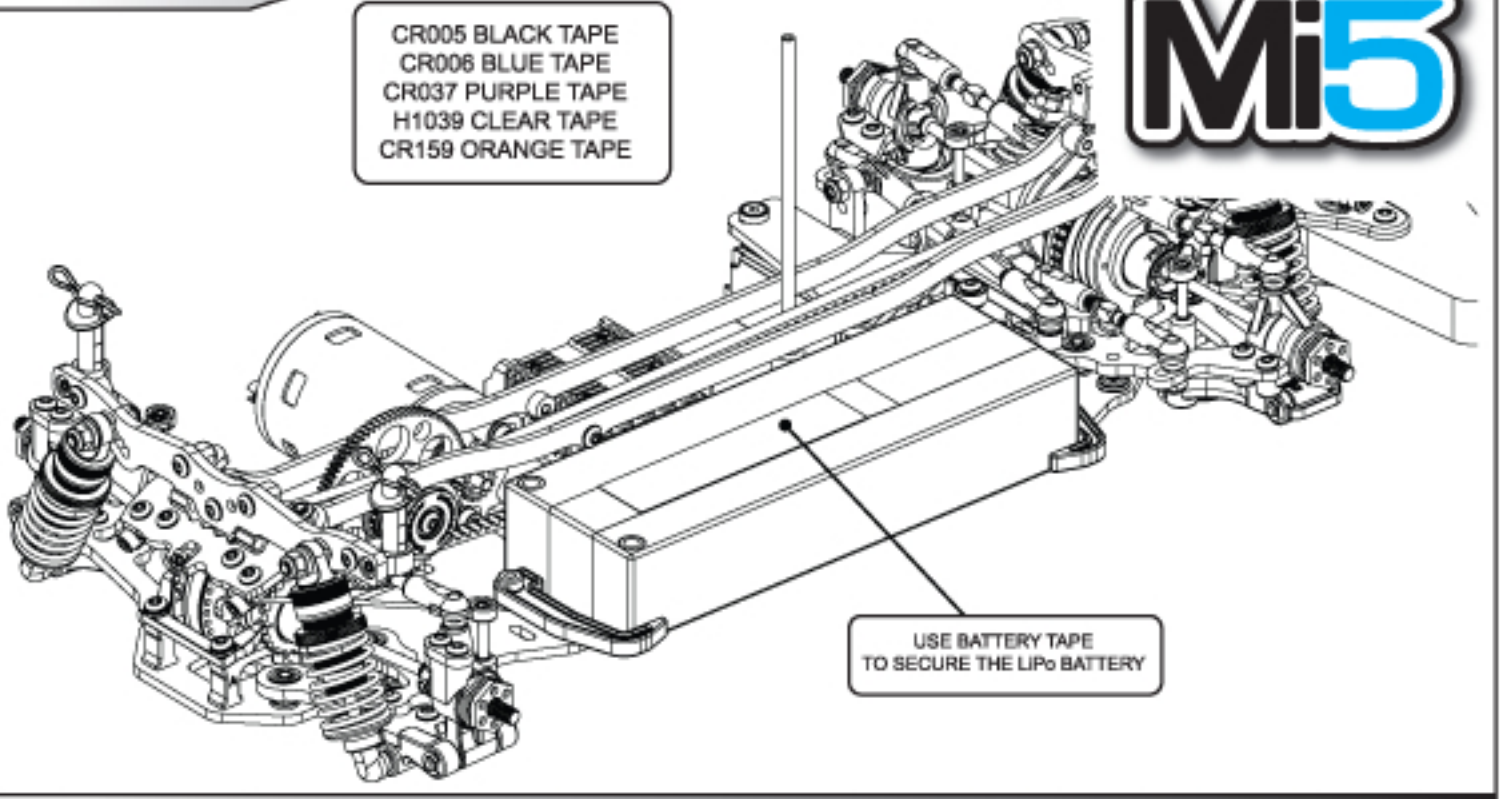

Step 55

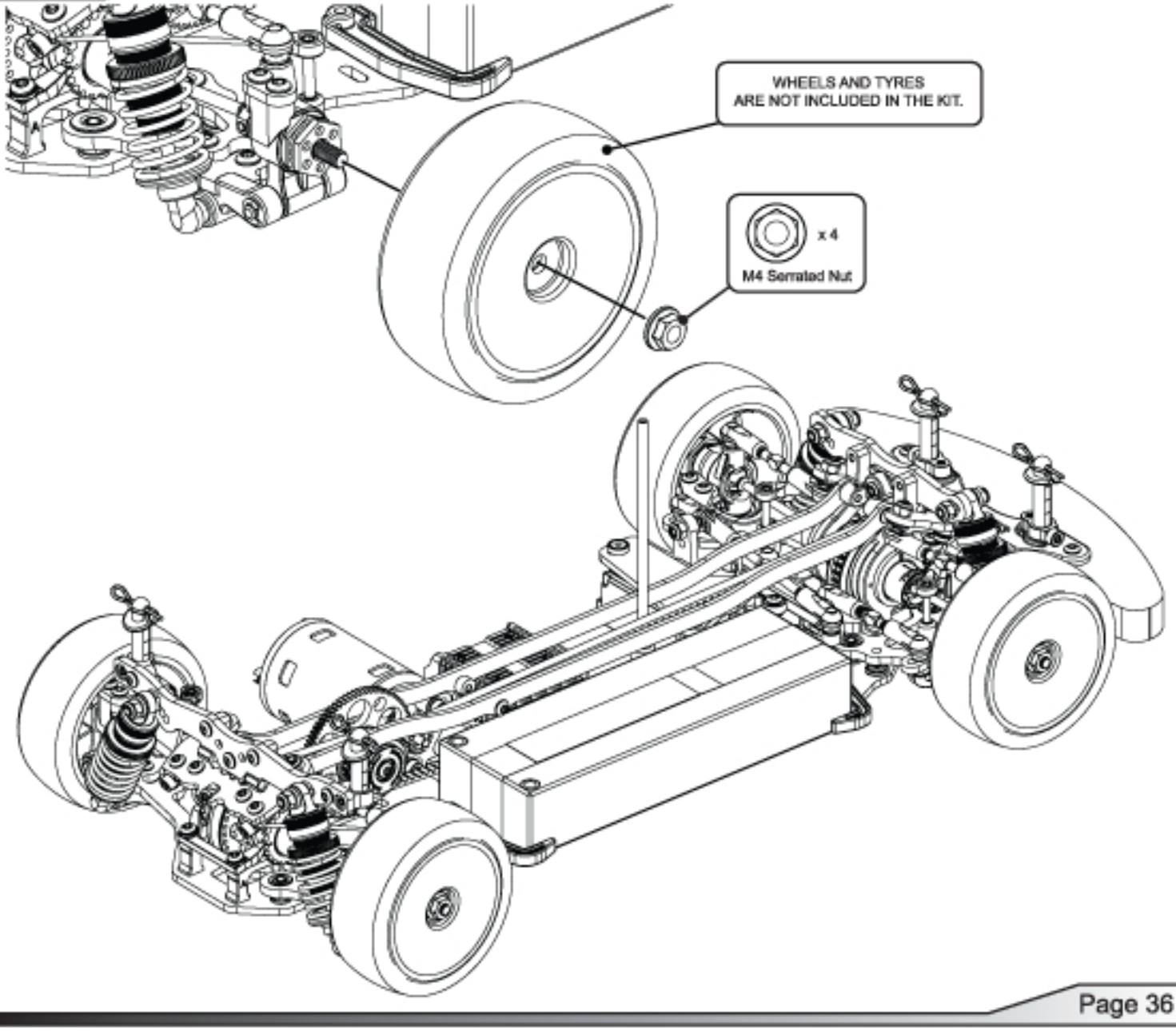

48DP

Maximum Tooth Sum = 113
Minimum Tooth Sum = 100
Internal Ratio = 1.8:1

	14	15	16	17	18	19	20	21	22	23	24	25	26	27	28	29	30	31	32	33	34	35	36	37	38	39
89	11.44	10.68	10.01	9.42	8.90	8.43	8.01	7.63	7.28	6.97	6.68															
87	11.19	10.44	9.79	9.21	8.70	8.24	7.83	7.46	7.12	6.81	6.53	6.26	6.02													
85		10.20	9.56	9.00	8.50	8.05	7.65	7.29	6.95	6.65	6.38	6.12	5.88	5.67	5.46											
70																	4.20	4.06	3.94	3.82	3.71	3.60	3.50	3.41	3.32	3.23
66																					3.49	3.39	3.30	3.21	3.13	3.05

64DP

Maximum Tooth Sum = 150
Minimum Tooth Sum = 134
Internal Ratio = 1.8:1

	19	20	21	22	23	24	25	26	27	28	29	30	31	32	33	34	35	36	37	38	39	40	41	42	43	44	45	46	47	48	49	50
118	11.18	10.62	10.11	9.65	9.23	8.85	8.50	8.17	7.87	7.59	7.32	7.08	6.85	6.64																		
116	10.99	10.44	9.94	9.49	9.08	8.70	8.35	8.03	7.73	7.46	7.20	6.96	6.74	6.53	6.33	6.14																
114		10.26	9.77	9.33	8.92	8.55	8.21	7.89	7.60	7.33	7.08	6.84	6.62	6.41	6.22	6.04	5.86	5.70														
106										6.81	6.58	6.36	6.15	5.96	5.78	5.61	5.45	5.30	5.16	5.02	4.89	4.77	4.65	4.54	4.44	4.34						
96																				4.55	4.43	4.32	4.21	4.11	4.02	3.93	3.84	3.76	3.68	3.60	3.53	3.46
90																										3.68	3.60	3.52	3.45	3.38	3.31	3.24

Camber

With maximum negative camber the car will have high levels of grip, but there may be the possibility of sudden breakaway in corners. Reducing the camber gives a more progressive slide, but may give less grip.

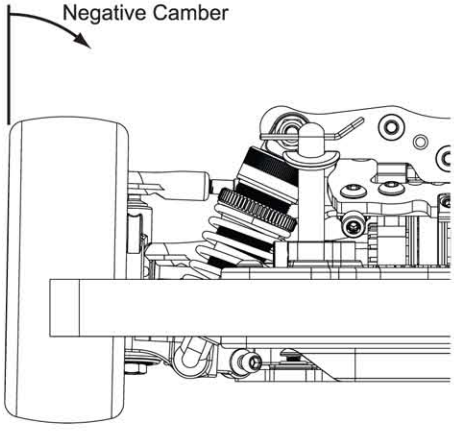

Track Width

Changing the front track width using wheel spacer's changes the wheel to kingpin offset. Adding a spacer to the front will make the car roll and pitch more in the turn, and make the car more aggressive. Removing a spacer will make the car corner flatter and be smoother.

On the rear adding a spacer will reduce steering and make the car more stable. Removing a spacer will give more steering but less stability.

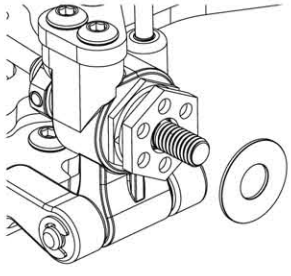

Ride Height

In general always run the car as low as possible, without the chassis grounding out, as it rolls into corners.

A good starting point with rubber tyres is 5.5mm at the front and 6.0mm at the rear.

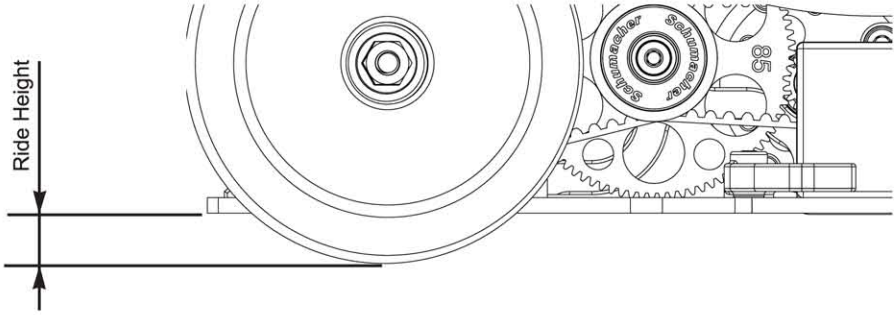

Front castor

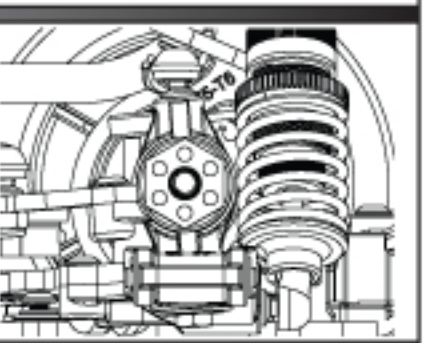

The front castor can be altered by changing the yoke. The car comes with 4° castor as standard. More castor will give slightly slower turn in, but more on power steering.

Shock Mounts

Vertical shock absorbers make the car react sharply to driver inputs.

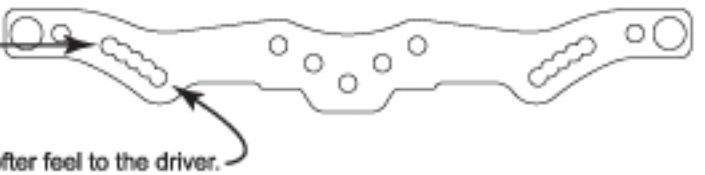

A laydown shock offers a softer feel to the driver.

Front Toe In

The front toe-in is set by adjusting the steering trackrod turnbuckles.

Toe-In = A less than B
Toe-Out = A greater than B

Toe-in will give a more stable car, but will give less sharp turn in.

Toe-out will give the opposite, less stability with sharper turn in to the corners.

We recommend to start at about 0° or 1° toe-out.

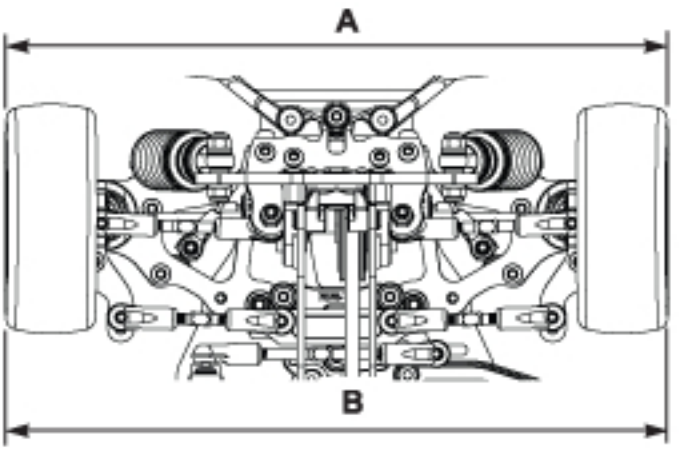

Link Ball Height

WIDTH ADJUSTMENT
The width of the inboard suspension link can be altered by Speed Secret link Brackets

HEIGHT ADJUSTMENT
The height of the inboard suspension link can be altered by adding or removing the Black spacer washers, between the link mount and the ball stud, or under the link mount bracket.

This adjustment alters the camber gain of the suspension, generally a lower ball stud (or shorter link) gives more instant cornering grip followed by a sudden breakaway. whereas a higher ball (or longer link) gives smoother more progressive cornering grip.

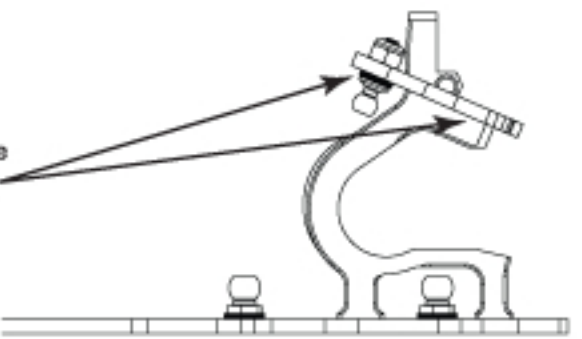

Optional Ackerman

The front kit position is best for most conditions, the optional rear position give less Ackerman/Lock making the car more forgiving on the track.

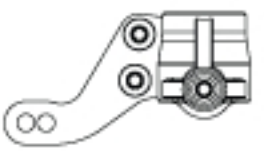

Anti-squat and Pro-squat - Kick up and Anti-dive

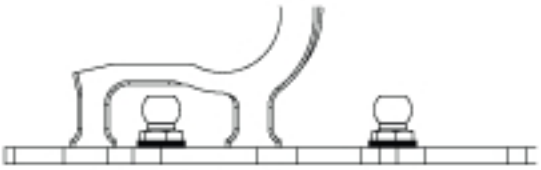

REAR SQUAT OR ANTI-SQUAT
The best balance on the car is usually with a level wishbone pin, however a small amount of Anti Squat can improve on power traction.

By removing the Grey Suspension washer underneath the rear Pivot Ball you will get Anti-Squat.

By removing the Grey Suspension washer washer underneath the front Pivot Ball you will get Pro-Squat.

0.5MM WASHER = 1º CHANGE



FRONT KICK UP OR ANTI-DIVE
The best balance on the car is usually with a level wishbone pin, however a small amount of anti-dive can improve stability under braking.

By removing the Grey Suspension washer underneath the rear Pivot Ball you will get Kick-up.

By removing the Grey Suspension washer washer underneath the front Pivot Ball you will get anti-dive

0.5MM WASHER = 0.85º CHANGE

Suspension Ball Height

Changing the height of wishbone pivot ball changes the roll centre.
Lowering the ball by removing BOTH spacers equally will lower the roll centre, this will increase grip but the car will roll more.
Adding spacers raising the ball will reduce grip, but the car should be more stable.

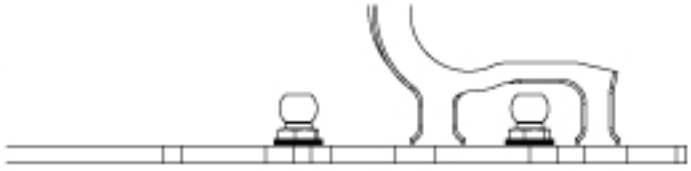

Roll Bars

Changing the roll bar thickness changes the way the weight is transferred, and the roll of the car. A stiffer/thicker rear roll bar will reduce entry steering but increase on power steering. A thicker/stiffer front bar will increase entry steering. Generally we use thinner roll bars in bumpy conditions.



The roll bar link can be adjusted in length to compensate for roll bar tweak.

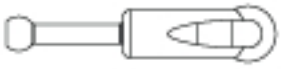

Shock Springs

The spring rate controls the suspension stiffness.
Spring adjusters only change the ride height. They DO NOT alter the suspension stiffness. On slippery or bumpy tracks use soft to medium rate springs, on flat or high grip tracks run medium to hard rate springs.

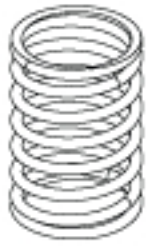

Shock Cap Type

Vented caps give zero rebound of the shock shaft.
Sealed shock caps can be built to give between 0-100% rebound.
Emulsion shocks can be built to give suck back, the opposite of rebound.

Use less rebound in high traction conditions and more rebound in low traction conditions. Emulsion shocks/suck back is used in low grip conditions that need a lot of steering.



Cell Position

Moving the battery forward/rearward changes the weight distribution of the car.

Moving more weight to the rear (Battery Rear) will give more rear traction on drive and more steering on corner entry/mid corner.

Moving more weight to the front (Battery Forward) will give less forward traction, but more corner exit steering and be an easier to drive car.

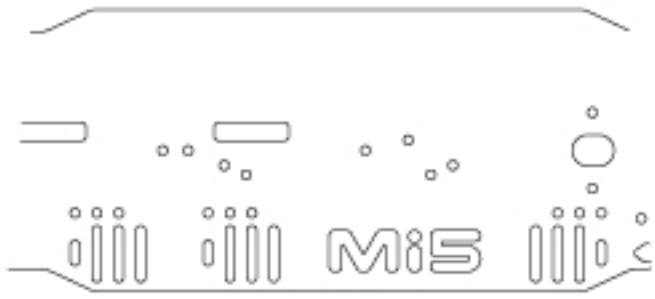

Mid or Rear Motor

The mid motor option gives much more rotation in tight corners, but is not as effective in fast, sweeping corners.
On tight twisty carpet tracks, the mid motor set up is a good option to use.

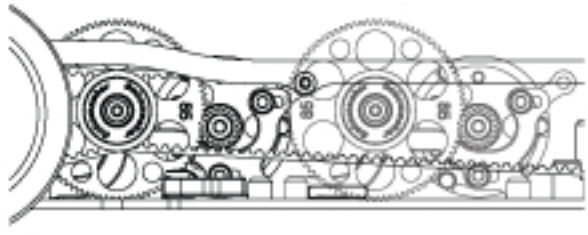

Rear Toe in

Less rear toe in will free up the rear of the corner making it rotate more in the turn, at the expense of some rear traction. This will make the car more difficult to drive. We use less rear toe in in high grip conditions.

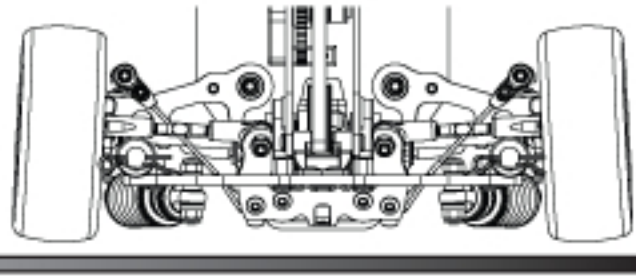

Ball - Gear Diff - Spool

A gear diff in the rear gives better drive out of a corner and more on power steering than a ball diff, but the ball diff is always easier to drive, and good in low traction conditions.

In the front a spool is the standard choice and the best option for most conditions. A gear diff will give more mid corner steering, but suffer on corner exit. We use a gear diff on very tight twisty tracks.

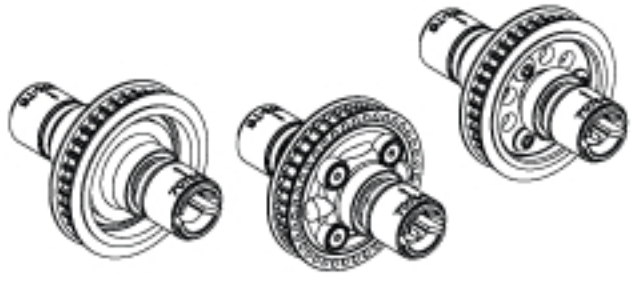

Rear Roll Centre Plates

The zero dink rear hub plate gives a good all round position, the one dink shortens the link 1mm per side and the two dink plate shortens the link a further 1mm per side. A shorter link gives more camber change which will give more initial grip but will snap away faster in comparison to a longer link that will be easier to control. A shorter link helps the car rotate better on a hairpin style corner.



Driveshafts

Alloy driveshaft's will reduce the weight of the car and give faster acceleration out of a corner.

The "true" double joint driveshafts will make the car much smoother on lock, but they can have slightly less entry steering over the standard driveshafts.

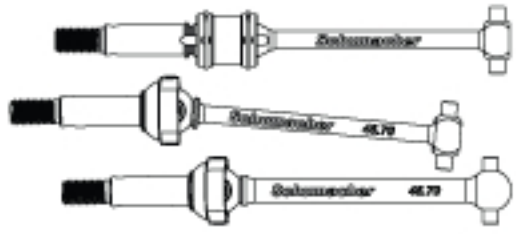



U3570 Alloy Wheel Hex; Slim+O ring - (pr)



U4230 M3 x 6mm Alloy Button Hd Screws pk10
U4231 M3 x 8mm Alloy Button Hd Screws pk10
U4232 M3 x 10mm Alloy Button Hd Screws pk10
U4233 M3 x 12mm Alloy Button Hd Screws pk10
U4234 M3 x 6mm Alloy Csk Screws pk10
U4235 M3 x 8mm Alloy Csk Screws pk10
U4236 M3 x 10mm Alloy Csk Screws pk10
U4237 M3 x 12mm Alloy Csk Screws pk10
U4238 M3 x 16mm Alloy Csk Screws pk10
U4240 Mi5 - M3 Alloy Screw Set - 78pcs



U4304 Spring 14Lb/in - White - Mi5 - 1pr
U4305 Spring 15Lb/in - Blue - Mi5 - 1pr
U4306 Spring 16Lb/in - Green - Mi5 - 1pr
U4307 Spring 17Lb/in - Red - Mi5 - 1pr
U4308 Spring 18Lb/in - Yellow - Mi5 - 1pr
U4309 Spring Set - Mi5 - 5pr
G882 Spec-R Touring Spring Set-Soft 2.5-2.8
G895 Spec-R Touring Spring - Soft 2.6
G896 Spec-R Touring Spring - Soft 2.7
G897 Spec-R Touring Spring - Soft 2.8



U4339 Top Deck End Alloy - Mi5 - 1pc



U1301 Silicone Diff Lube - Pot
U1954 Pro - Thrust Bearing
U1957 Moly Grease - Pot
U2573 Pro-Diff Screw Set
U2574 Ball Bearing - 5x9x2.5 Open (pr)
U3019 Diff Balls; SiNi 2.5mm (pk12)
U3140 Diff Washer; ProSpec - Mi4 (pr)
U3508 CNC Diff Pulley and Fences; 36T
U3820 Alloy Diff Output; Male - Mi4CX
U3821 Alloy Diff Output; Female - Mi4CX
U4325 Pro Ball Diff - Mi5

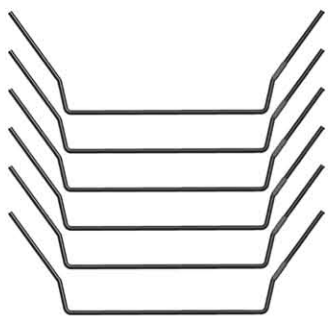

U4271 Front Roll Bar Set - Mi5



U4311 C/F Link Mount (3Dink) - Mi5 - 1pc



U4290 Mid Motor Conversion - Mi5
U4322 Bando Mid Motor Front Belt 128T - Mi5
U4323 Bando Mid Motor Rear Belt 103T - Mi5
U4324 C/F Mid Motor Topdeck - Mi5
U4340 C/F LiPo Stops Mid Belt - Mi5



U4295 Optional Rear Hub Carrier Arms - Mi5



U4354 C/F Rear Wishbone 2.5deg LH - Mi5 - 1pc
U4356 C/F Rear Wishbone 2.0deg LH - Mi5 - 1pc
U4358 C/F Rear Wishbone 2.5deg RH- Mi5 - 1pc
U4360 C/F Rear Wishbone 2.0deg RH - Mi5 - 1pc

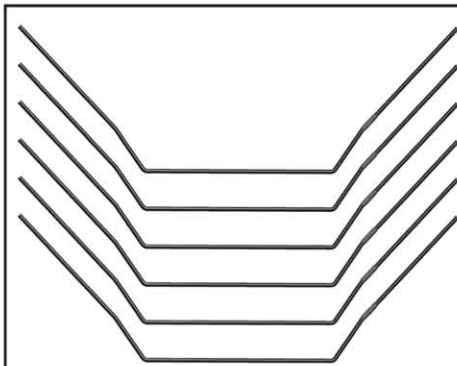

U4272 Rear Roll Bar Set - Mi5



U4258 Front Yokes 6deg - Mi5 - 1pr



U4321
Alloy Wheel Shims 0.50 & 1.00mm - Mi5 - 8pc



G883 SPEC-R Carbon Internal Gear Set



G868 SPEC-R Gear Differential - Mi5 FRONT



G875 SPEC-R Titanium Gear Diff Pins



U3161 87T 48DP CNC Spur Gear - Mi4
U3162 89T 48DP CNC Spur Gear - Mi4
U3163 114T 64DP CNC Spur Gear - Mi4
U3165 118T 64dp CNC Spur Gear - Mi4
U3247 70T 48DP CNC Spur Gear - Mi4
U3248 96T 64dp CNC Spur Gear - Mi4
U3269 90T 64DP CNC Spur Gear - Mi4
U3270 106T 64DP CNC Spur Gear - Mi4
U3400 66T 48DP CNC Spur Gear - Mi4
U3560 74T 48DP CNC Spur Gear Mi4



U1573 Titanium Turnbuckle; purple - 53mm (pr)
U1905 Titanium Turnbuckle; purple - 35mm (pr)
U4326 Titanium Turnbuckle; purple - 30mm (pr)
U4336 Ti Turnbuckle Set - Mi5 (7pc)



U1576 Titanium Pivot Pin; 25mm (pr)
U2719 Titanium Pivot Pin; 18mm pr



U2862 Ceramic Bearing - 5x10x4 Shield (pr)
U3017 Ceramic Bearing - 10x15x4 Shield (pr)
U3386 Ceramic Bearing - 4x8x3 Shield (pr)
U4344 Ceramic Bearing - 5x8x2.5mm (pr)
U4343 Ceramic Bearing Set - Mi5



U3490 Alloy Servo Mounts Violet
U4327 Alloy Servo Mount Black - Cat K1



U4342 Ti Shock Rods - Mi-4/Mi-5 - pr



CR110 Alloy Servo Arm; Futaba Purple
CR111 Alloy Servo Arm; KO/Sanwa Purple
CR112 Alloy Servo Arm; Futaba Blue
CR113 Alloy Servo Arm; KO/Sanwa Blue
CR117 Alloy Servo Arm; Futaba Black
CR118 Alloy Servo Arm; KO/Sanwa Black



U4130 Vented Shock Caps - Small Bore - (Pr)
U4217 Vented Shock Cap Service Kit



U2988 M3 Csk Washers - Purple Alloy (pk10)
U4155 M3 Csk Washers - Black Alloy (pk10)



G884 Driveshaft Front True CV - Mi4 - pr



U4328 Servo Saver 2013 Spec - Mi5
U4329 Servo Saver 2013 Mouldings
U4330 Servo Saver 2013 Springs
U4341 C/F Servo Mount (Servo Saver) - Mi5



U3260 Ti Shock Post - Mi4 pr



CR280 Ti Pro Ball Studs - Short - pair
CR281 Ti Pro Ball Studs - Ultra Short - pair
CR282 Ti Ball Studs - Long - pair
CR283 Ti Ball Stud Set - Mi5



U3833 Driveshafts; Alloy Rear - Mi4CX pr
U3840 Driveshaft; Alloy Axle - 1pc
U3841 Driveshaft; Alloy Bone Front - 1pc
U3842 Driveshaft; Alloy Bone Rear - 1pc
U4338 Driveshafts; Alloy Front - Mi5 pr