Driver Details

NAME
DATE
EVENT / TRACK
WEATHER
RESULT
FASTEST LAP TIME

Chassis and Electrics

CHASSIS Mid ☐ Alloy ☐ Carbon ☐
TOP DECK Vertical ☐ Horizontal ☐
BODYSHELL
WING
E.S.C
SERVO
RECEIVER
LIPO

Track Conditions

GRIP LEVEL High ☐ Medium ☐ Low ☐
TYPE Tight ☐ Open ☐ Mixed ☐
SURFACE Carpet ☐ Tarmac ☐
CONDITION Smooth ☐ Bumpy ☐
AIR TEMPERATURE °C °F TRACK TEMPERATURE °C °F
VENUE Indoor ☐ Outdoor ☐

Motor and Gearing

MOTOR
ROTOR DIAMETER
TIMING
GEAR PITCH 48DP ☐ 64DP ☐
SPUR SIZE
PINION SIZE

NOTES

Wheels, Tyres and Inserts

WHEELS
TYRES
INSERTS
TYRE ADDITIVE
ADDITIVE TIME Front Minutes Rear Minutes
TYRE WARMERS Yes ☐ No ☐ Temp °C Time Minutes

Topdeck Options

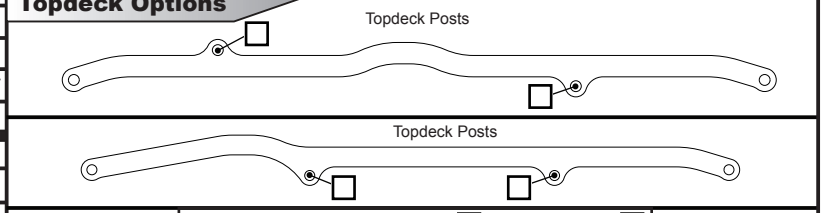

Front

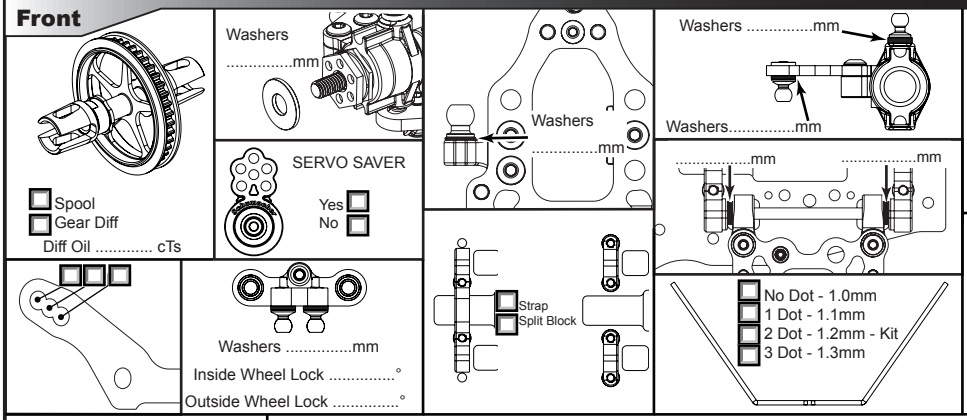

Pivot Pin Insert	Front	Rear
0.25 In	☐	☐
0.25 Out	☐	☐
0.75 In	☐	☐
0.75 Out	☐	☐

Rear

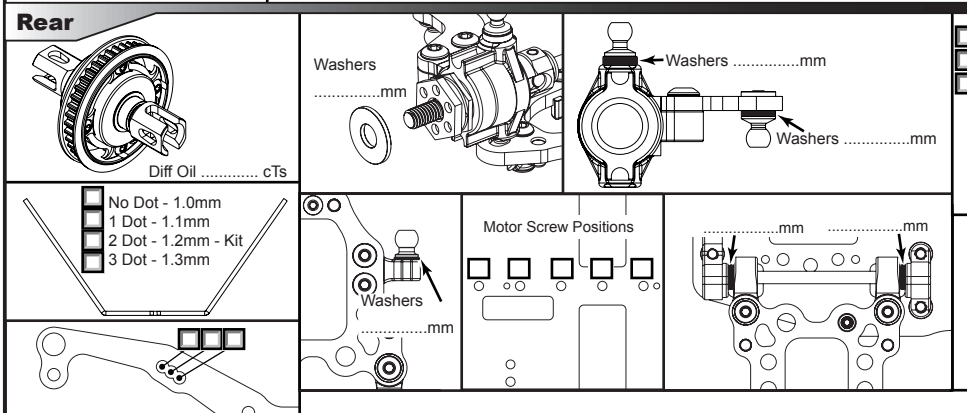

Pivot Pin Insert	Front	Rear
0.25 In	☐	☐
0.25 Out	☐	☐
0.75 In	☐	☐
0.75 Out	☐	☐