U8111 4WD Conversion

The 4WD conversion now includes a spool and double joint driveshafts to maximise performance. The instructions in the kit manual (pages 40-44) are now obsolete. These instructions MUST be used instead.

MISSION FT
FRONT WHEEL DRIVE

U8111 4WD Conversion Step 1

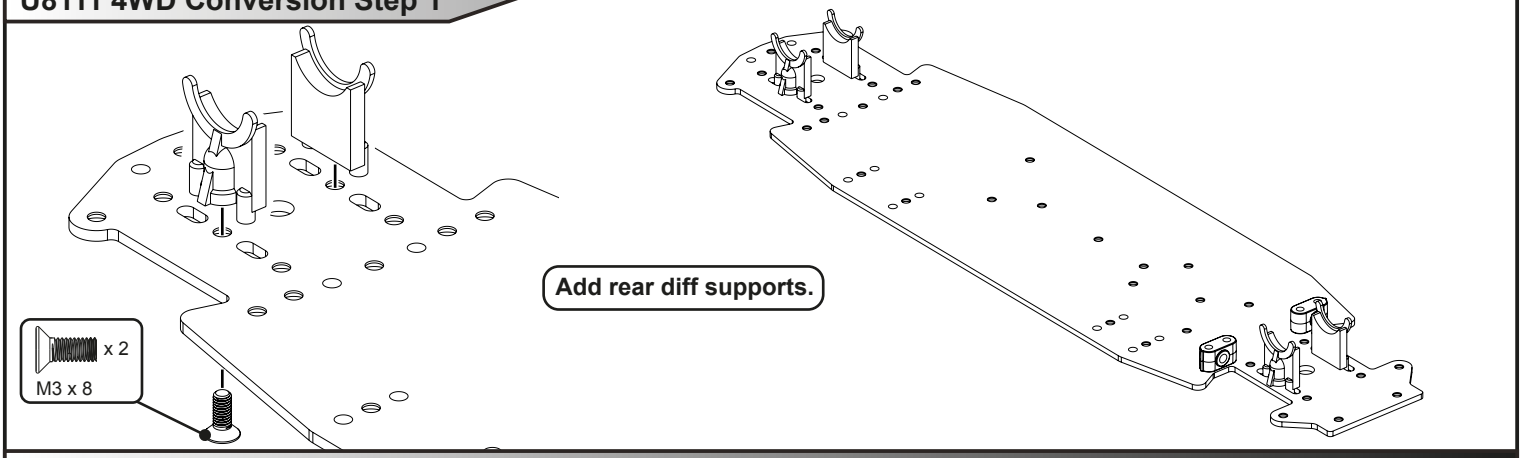

4WD Conversion Step 2

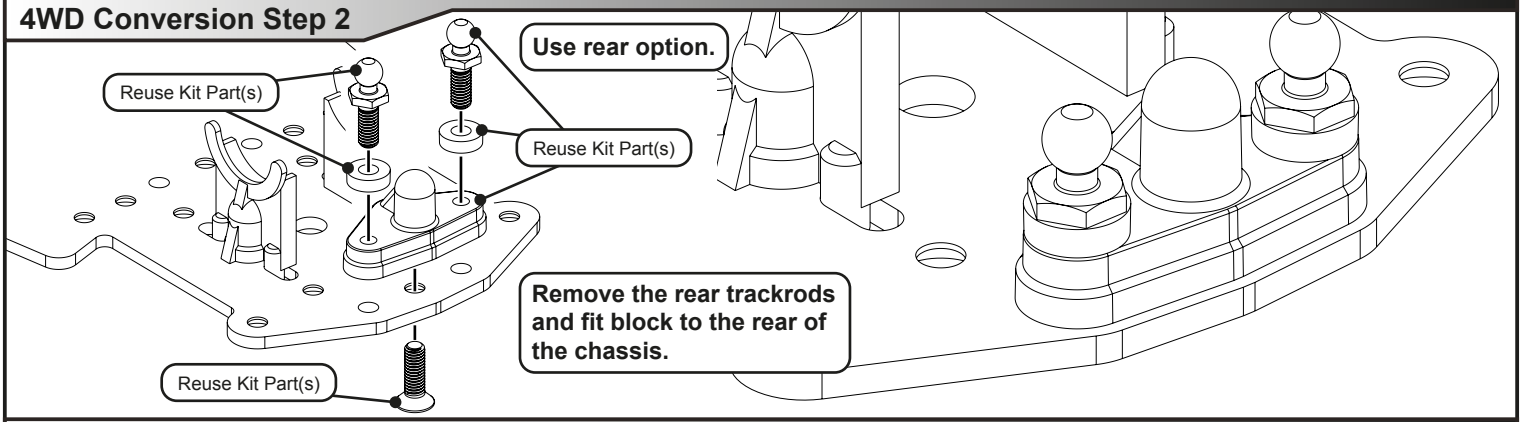

4WD Conversion Step 4

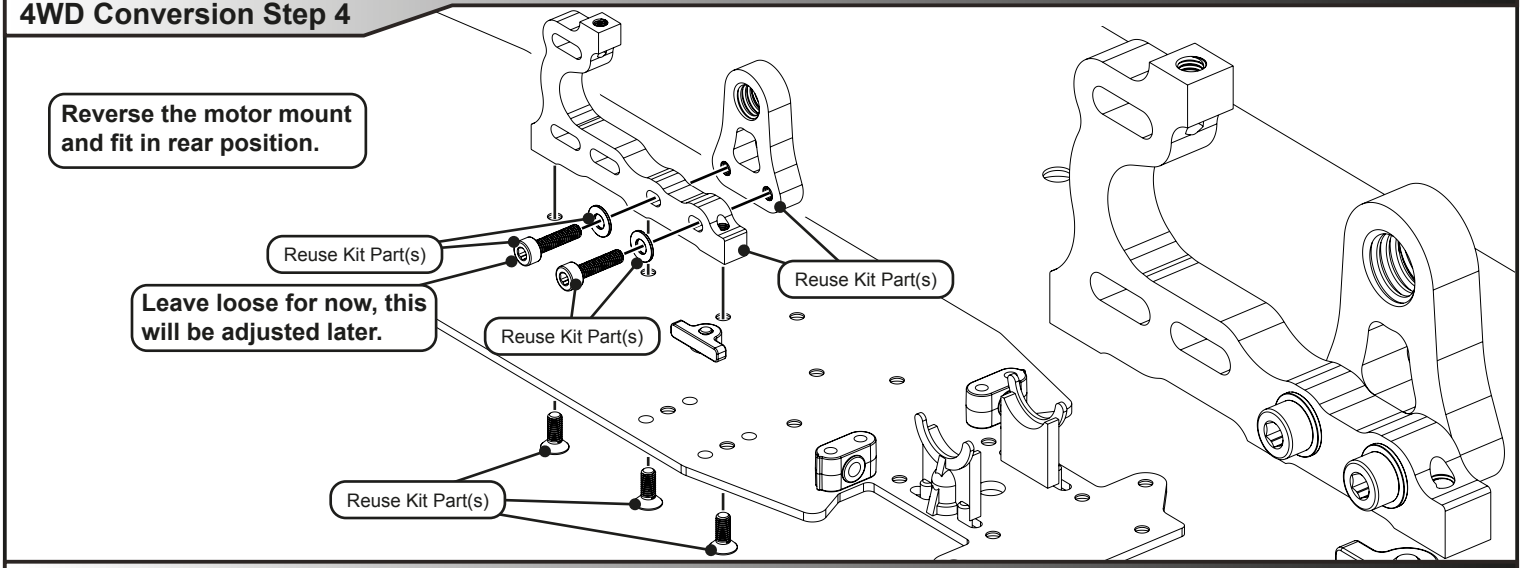

4WD Conversion Step 6

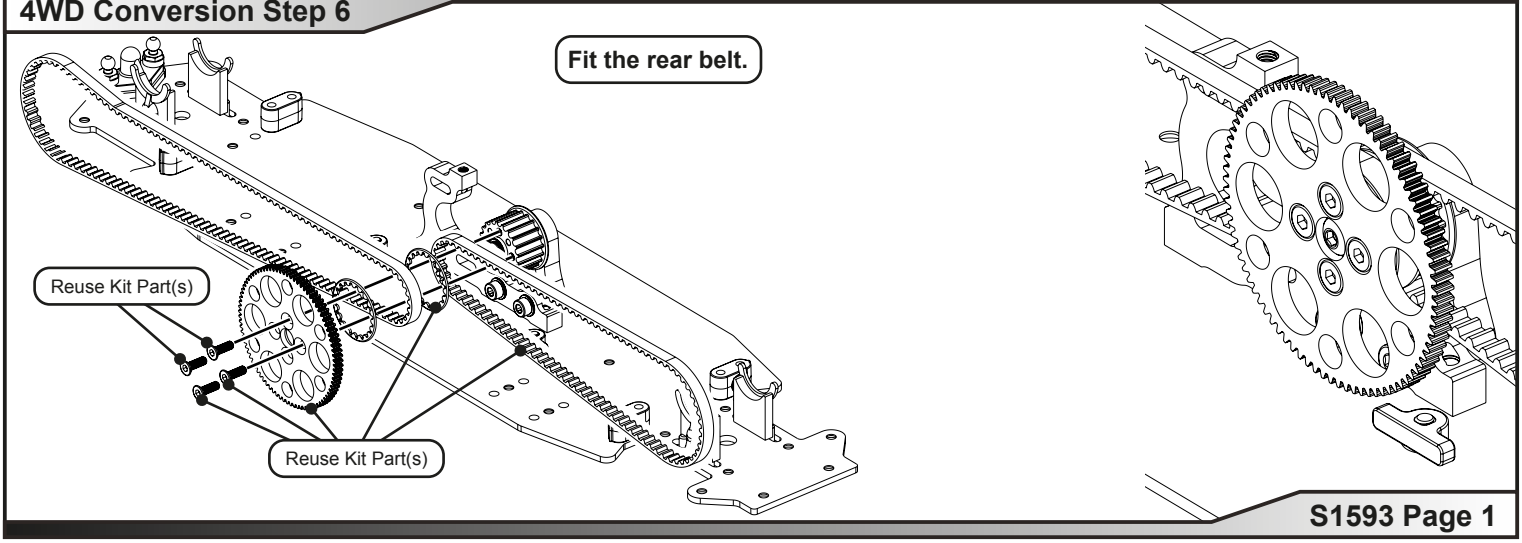

U8111 4WD Conversion Step 10

U3808 - Assembled Spool

MISSION FT
FRONT WHEEL DRIVE

Fit the diff in the rear.
Fit the spool in the front.

Check the transmission rotates freely.

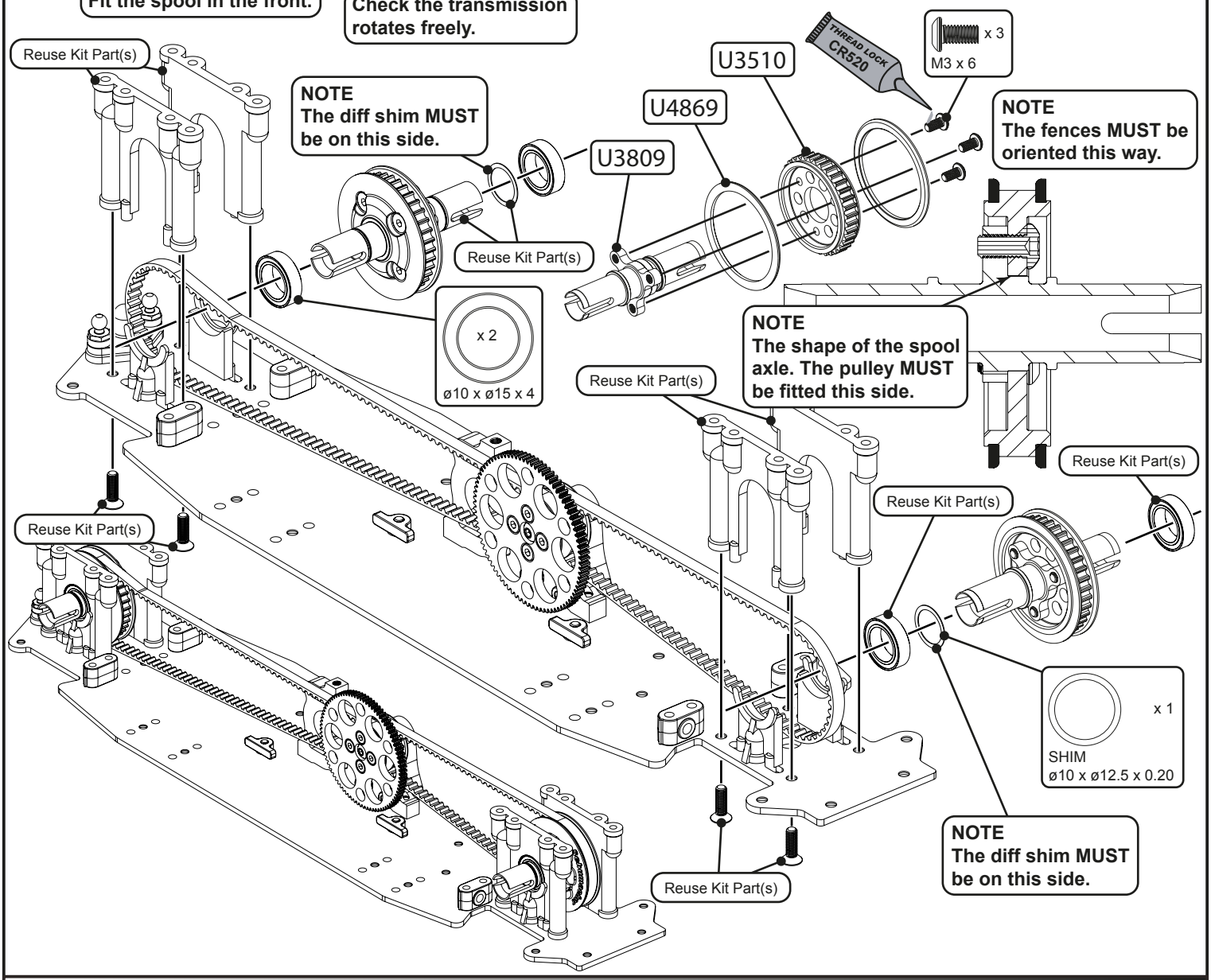

4WD Conversion Step 15-16

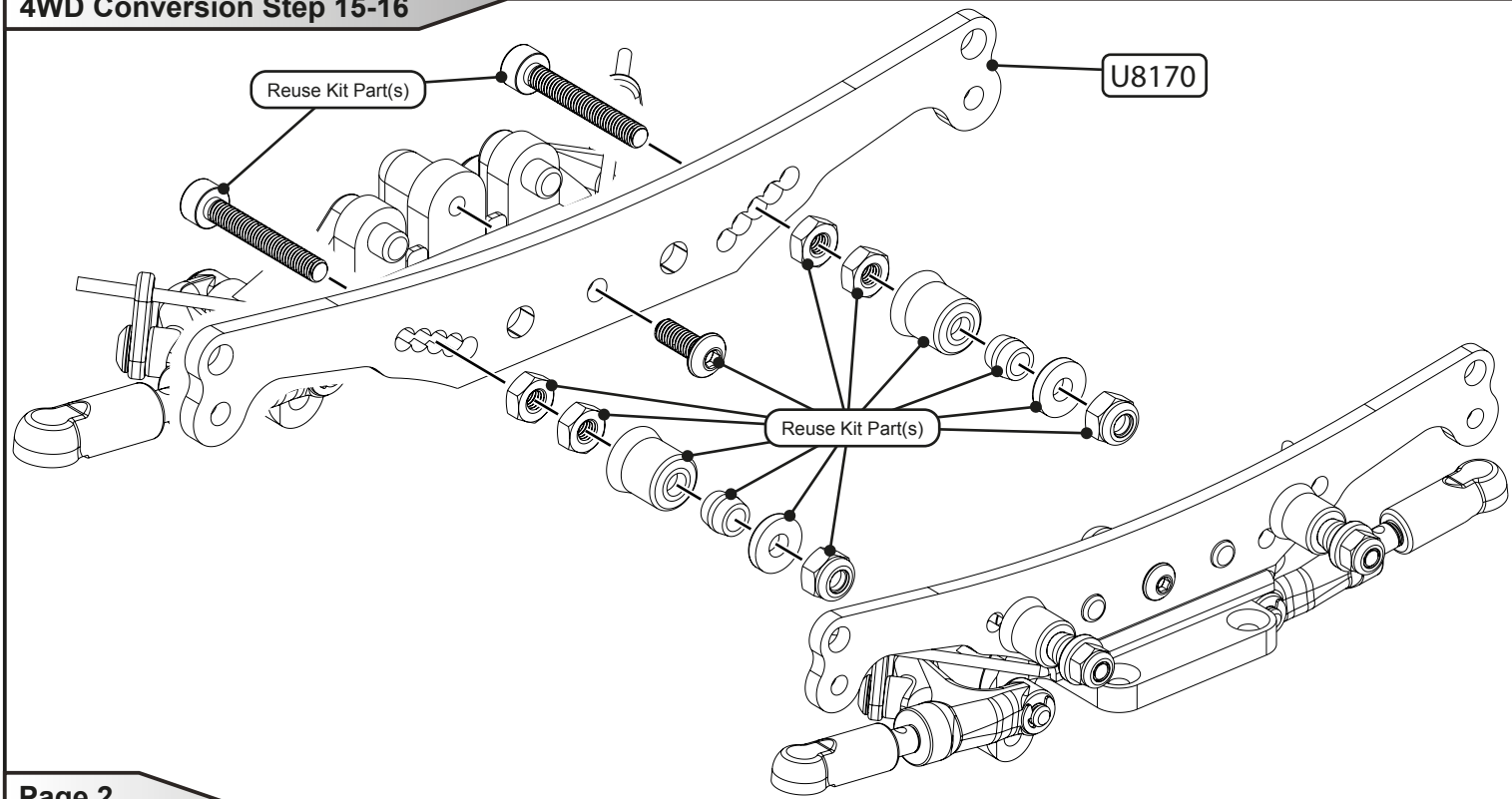

MISSION FT
FRONT WHEEL DRIVE

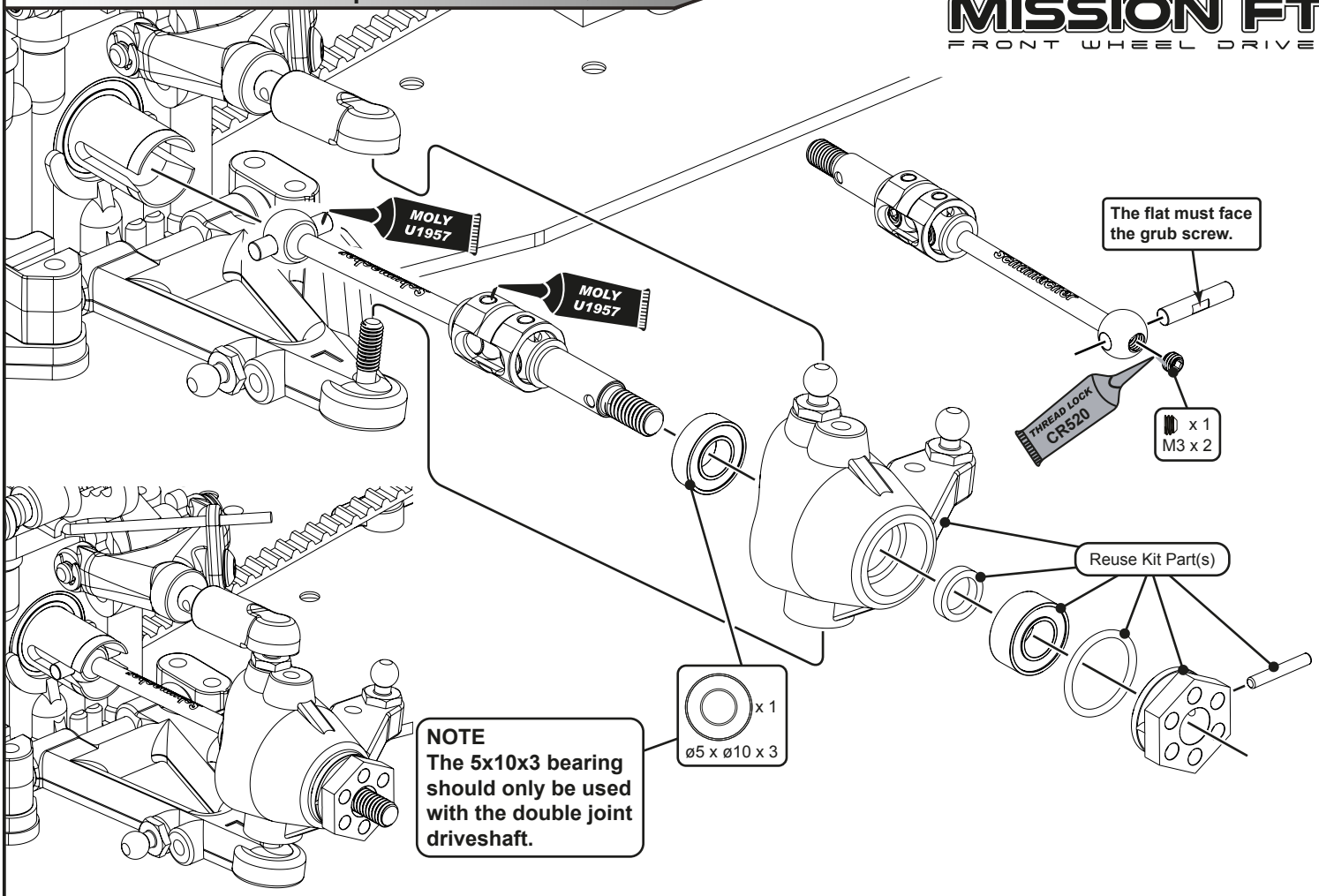

NOTE
The 5x10x3 bearing should only be used with the double joint driveshaft.

4WD Conversion Step 22 Front Right Quarter

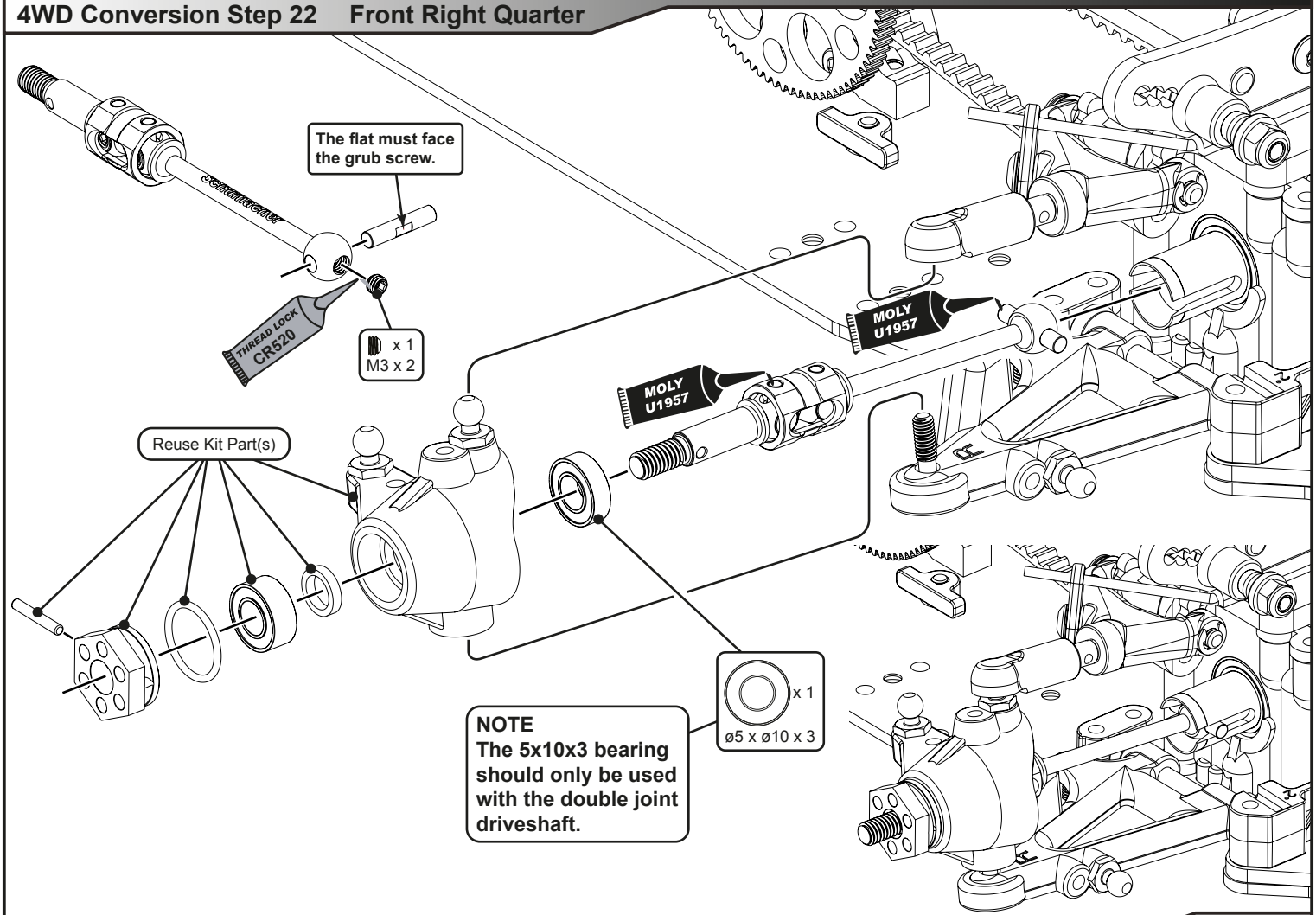

NOTE
The 5x10x3 bearing should only be used with the double joint driveshaft.

U8111 4WD Conversion Step 25 Rear Left Quarter

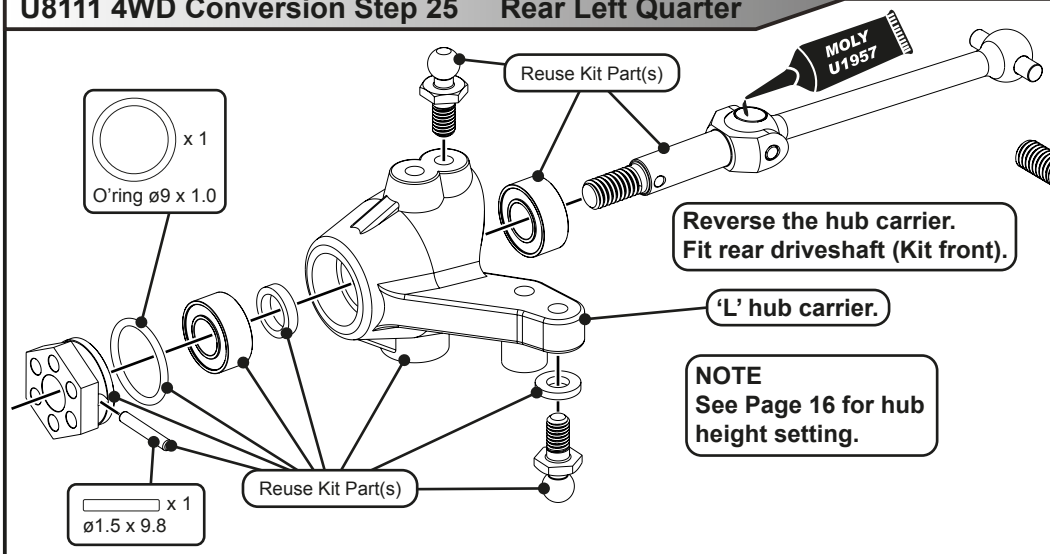

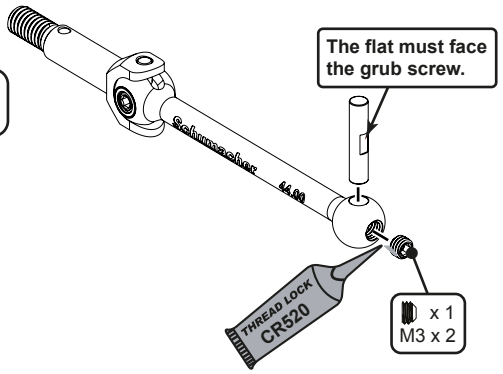

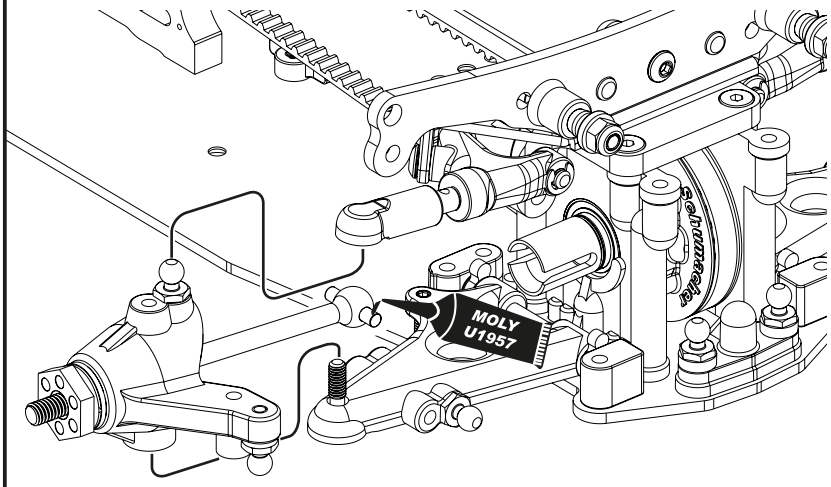

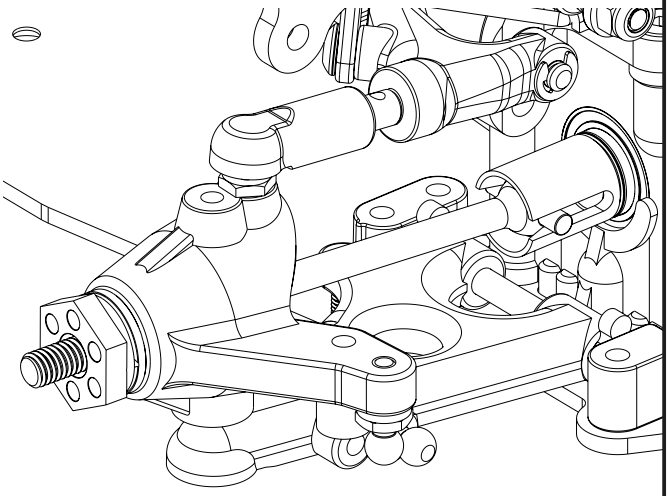

4WD Conversion Step 26 Rear Right Quarter

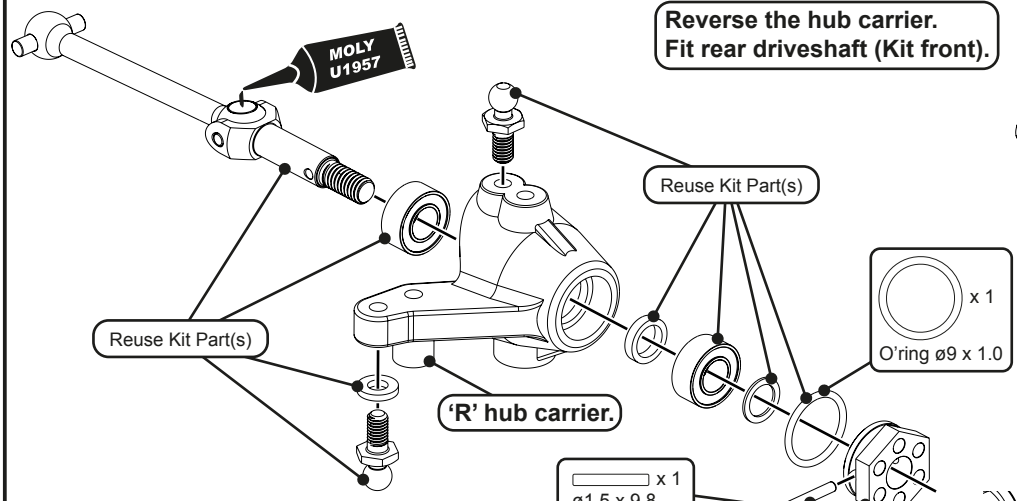

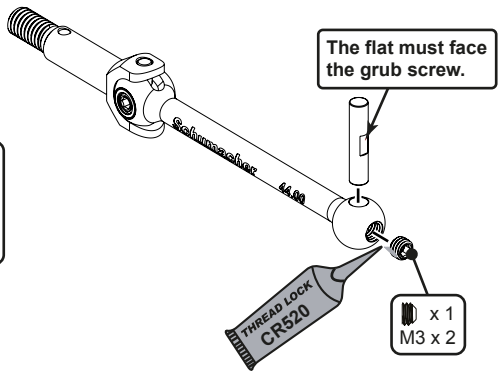

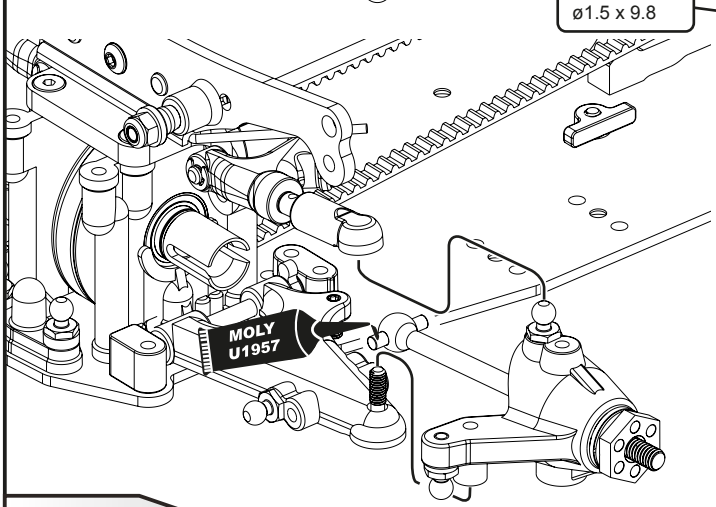

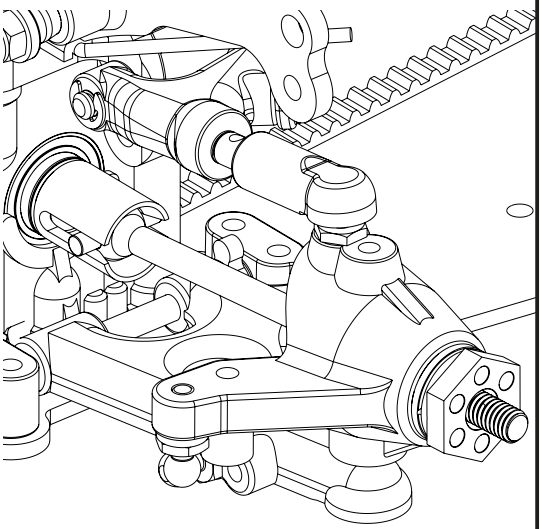

U8111 4WD Conversion Step 27

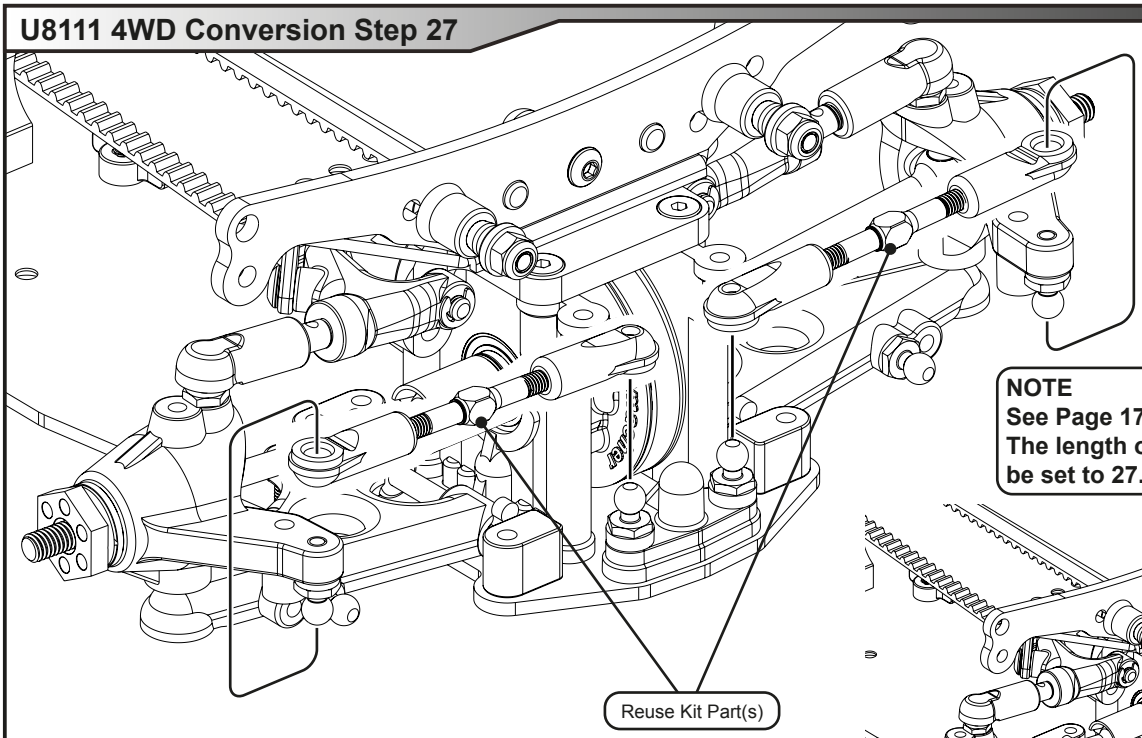

Fit rear trackrods.

NOTE
See Page 17 for turnbuckle assembly. The length of the turnbuckle should be set to 27.00mm

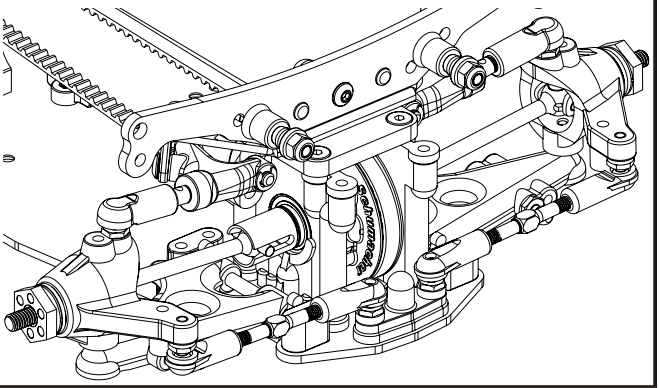

4WD Conversion Step 28

Reverse the servo mount.

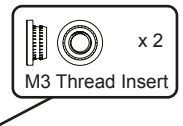

NOTE
See Page 18 for assembly instructions.

4WD Conversion Step 29

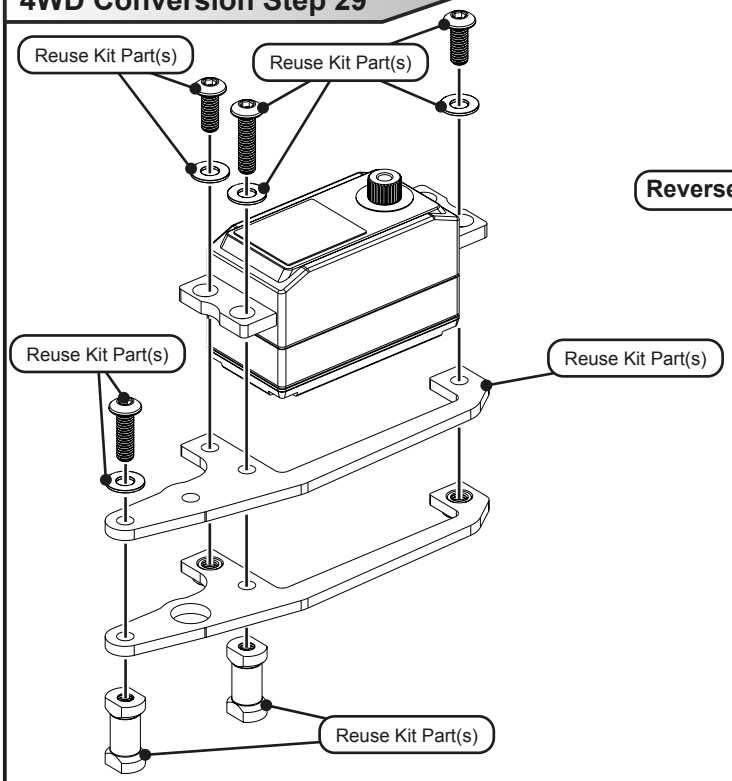

Reverse the servo in the car.

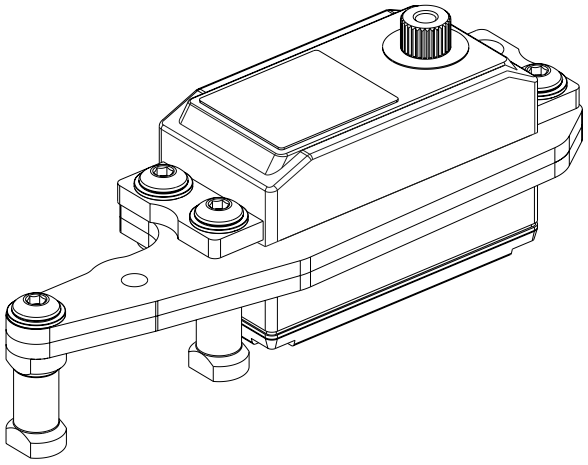

U8111 4WD Conversion Step 33

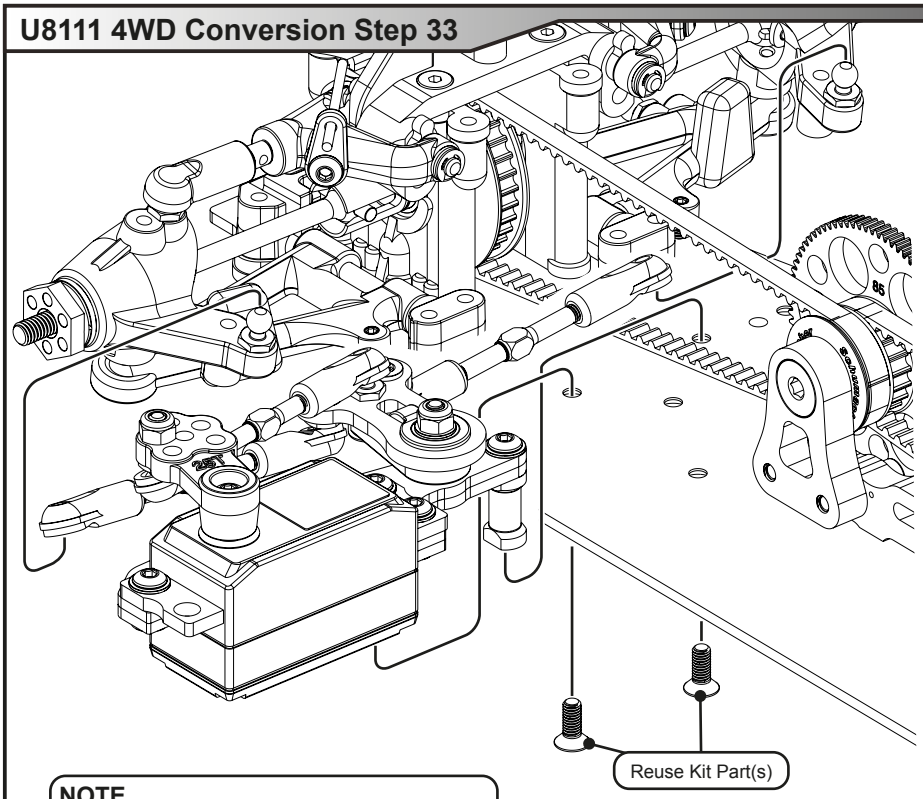

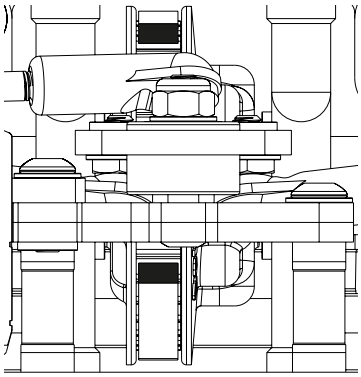

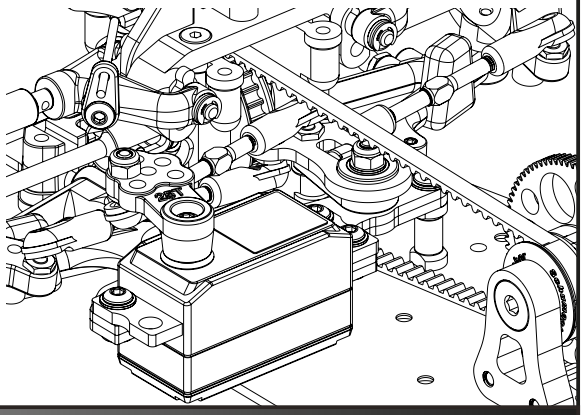

NOTE
See Page 20 for turnbuckle assembly.

4WD Conversion Step 41

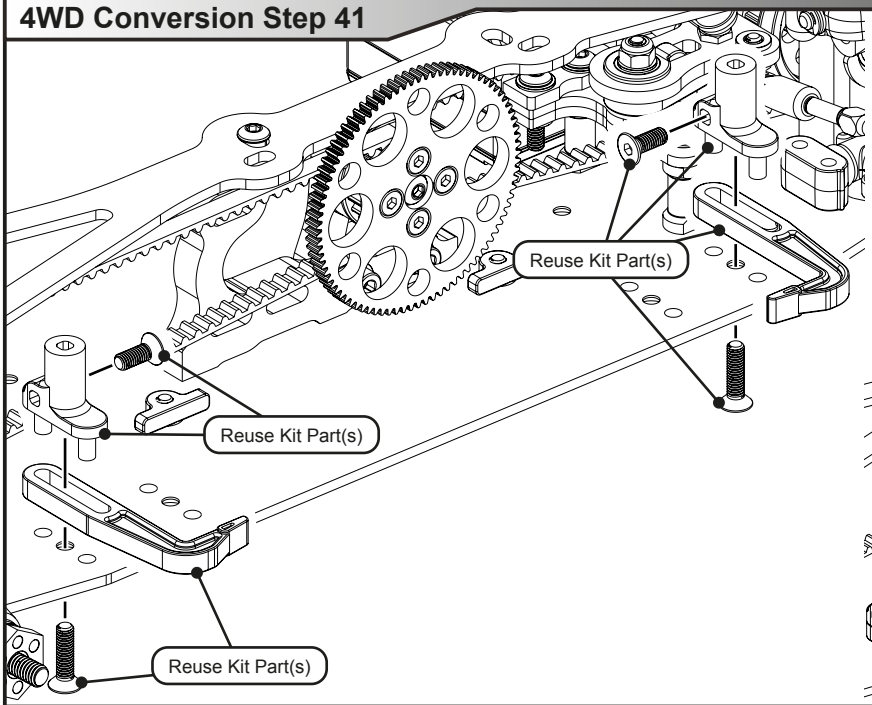

NOTE
When in the 4wd configuration, the Mission FT can fit full size stick LiPo's, by moving the LiPo mounts to the outer positions.

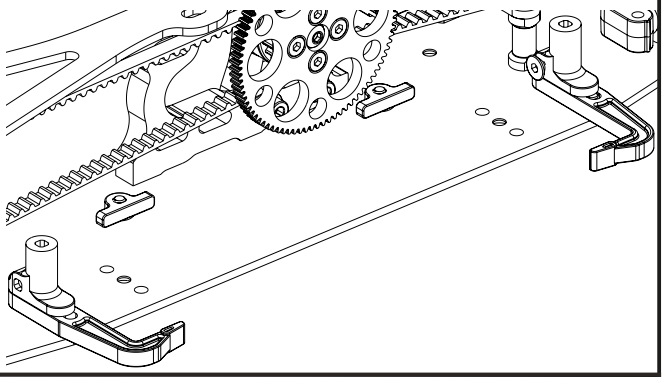

4WD Conversion Rear Belt Tensioner

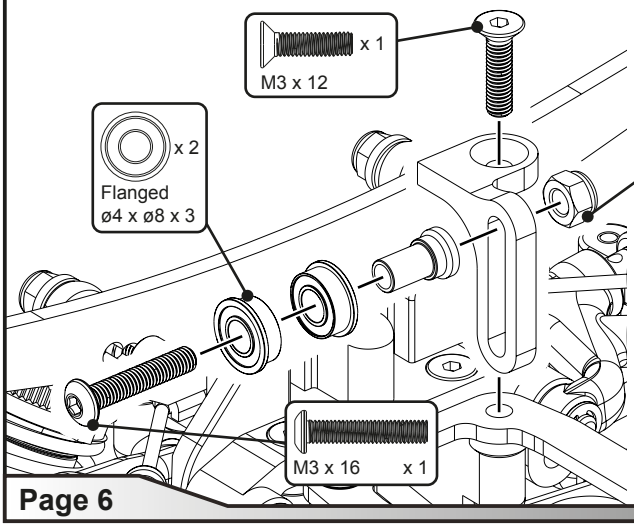

NOTE
Use the layshaft mount to set the front belt tension, then set the rear belt tension.

