rascal

micro nitro

Assembly & Maintenance Manual



S1127

Schumacher

IMPORTANT SAFETY NOTES

1. This product is not suitable for children under 14 years of age unless supervised by an adult.
2. Select an area for assembly that is away from reach of small children. The parts are small and can be swallowed by children causing choking and possible internal injuries.
3. Shock fluids, grease and adhesives should be kept out of children's reach. They are not toxic, but were not intended for human consumption.
4. Exercise care when using any hand tools, sharp instruments and power tools during construction.
5. Carefully read all manufacturers warnings and cautions for any glues or paints that may be used for assembly purposes.

Do not use excessive force when tightening the self-tapping screws, or you may strip the thread in the plastic. It is recommended to stop tightening it when the threaded part on the screw goes into the plastic part and you feel some resistance from the tightening. Screws can be made easier to tighten if a drop of oil is used.



Good

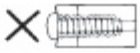

Over tighten and may strip the thread in the plastic

ADDITIONAL ITEMS REQUIRED

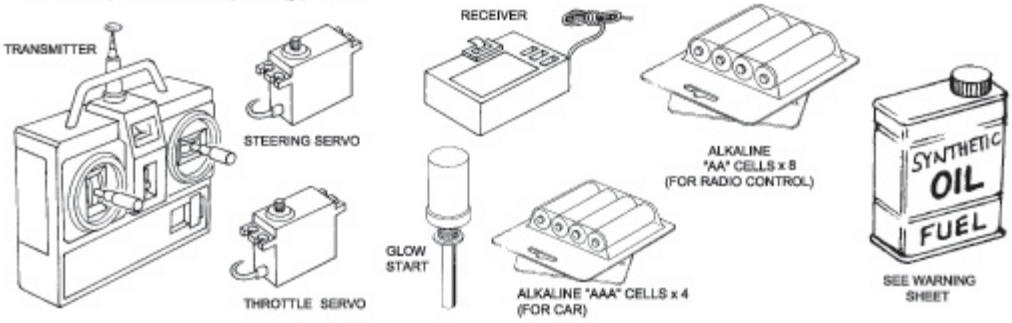

FOR BEST PERFORMANCE, IT IS VERY IMPORTANT THAT GREAT CARE IS TAKEN TO ENSURE THE FREE MOVEMENT OF ALL PARTS.

ADDITIONAL TOOLS REQUIRED

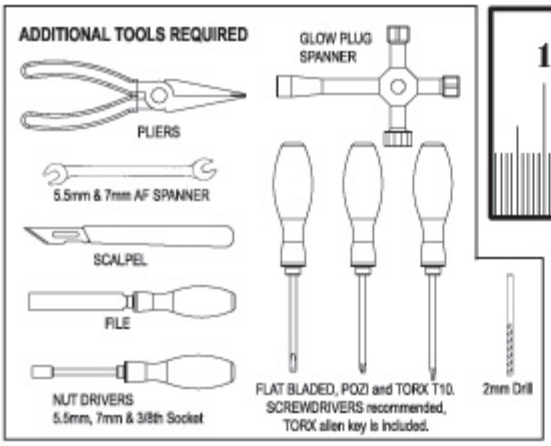



In line with our policy of continous development the exact specification of the kit may vary.
In the unlikely event of any problems with your kit please contact the model shop where you purchased it.

BEFORE STARTING TO INSTALL THE RADIO GEAR,
CONNECT UP SERVOS, BATTERY, SWITCH AND RECEIVER.
SET TRIMS ON THE TRANSMITTER TO NEUTRAL AND
TURN THE RADIO AND CAR ON. TEST BOTH SERVOS WORK

RADIO INSTALLATION

- (A) M3 x 10 Pan TORX Head x 5
- (B) M3 x 10 Csk TORX Head x 1
- (C) M3 Steel Washer x 4
- (D) M3 Nyloc Nut x 4

1

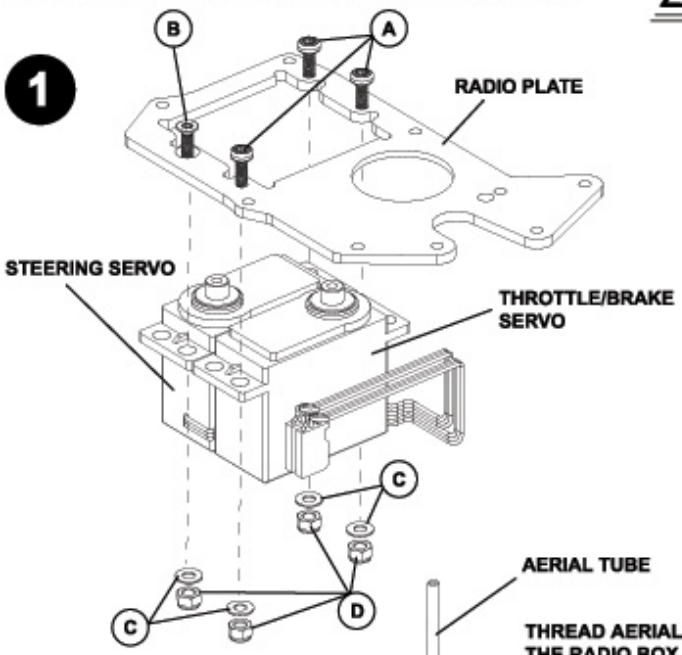

AERIAL TUBE

THREAD AERIAL WIRE THROUGH
THE RADIO BOX AND RADIO PLATE
THEN INTO THE AERIAL TUBE

ARRANGE WIRES INTO THE RADIO BOX
BEFORE SCREWING THE RADIO PLATE DOWN

FIT THE GROMMET

2

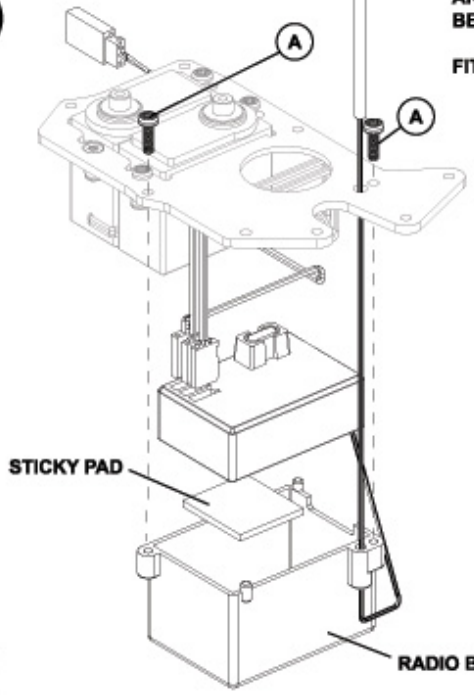

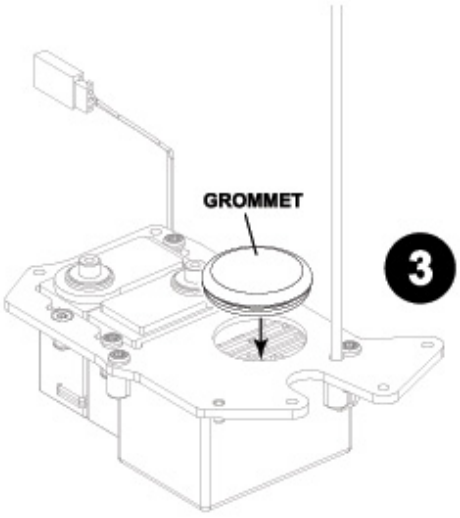

3

4 INSTALL SERVOS

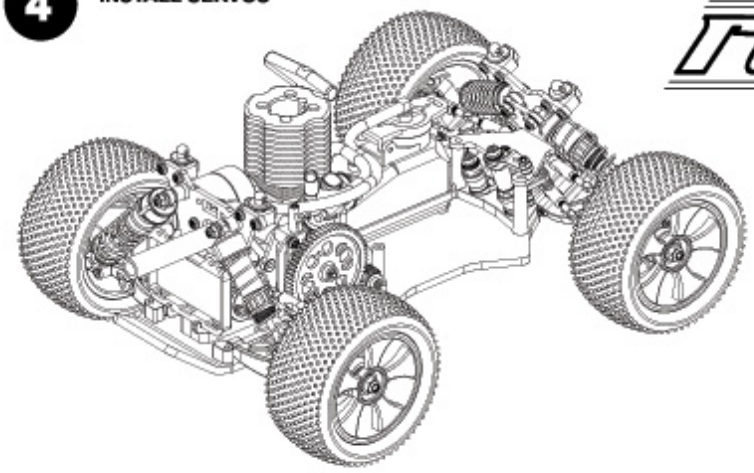

RADIO INSTALLATION Continued

(A) M3 x 16 Pan TORX Head x 3

(B) M3 x 10 Pan TORX Head x 2

5

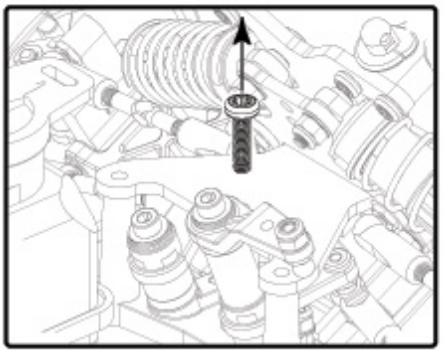

REMOVE SCREW SHOWN BEFORE INSTALLATION OF RADIO EQUIPMENT.

6

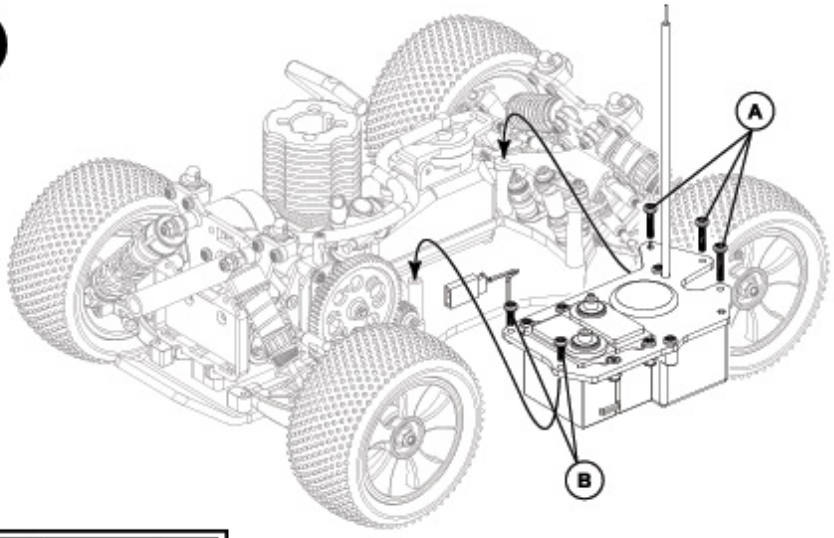

7

SCREWS SUPPLIED WITH SWITCH

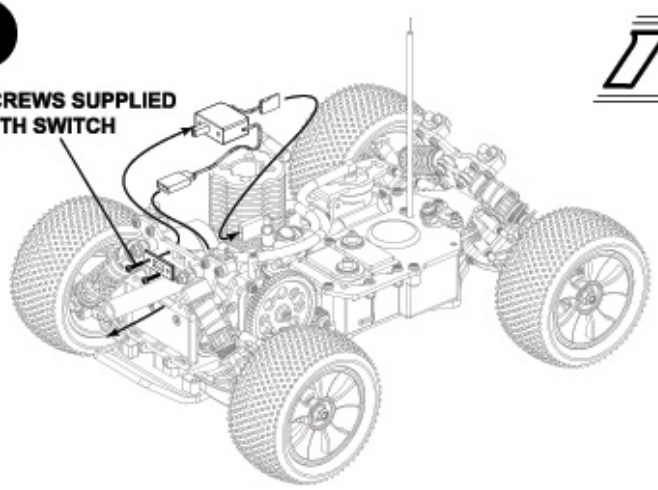

rascal micro nitro

RADIO INSTALLATION Continued

(A) 

M3 x 10 Pan TORX Head x 2

8

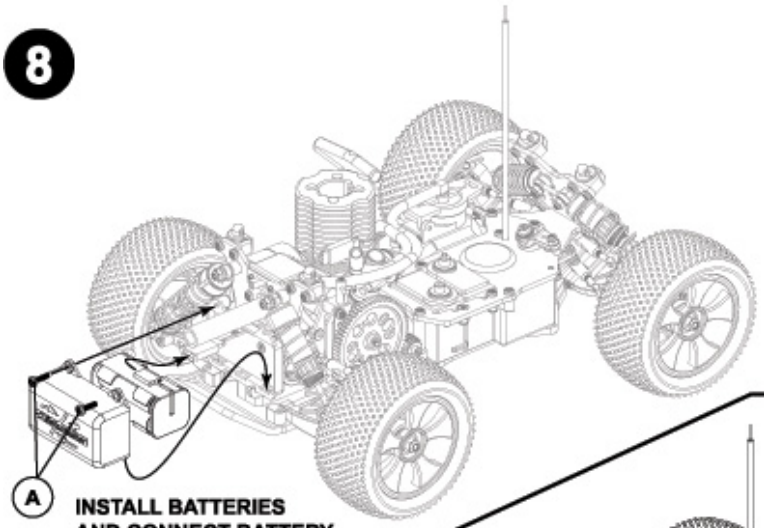

(A) INSTALL BATTERIES AND CONNECT BATTERY BOX TO SWITCH.

9

NOW CHECK RADIO INSTALLATION WORKS CORRECTLY AGAIN.

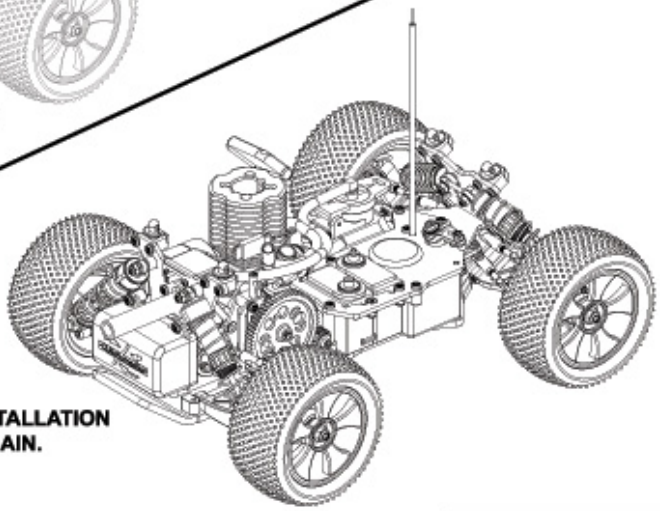

Schumacher

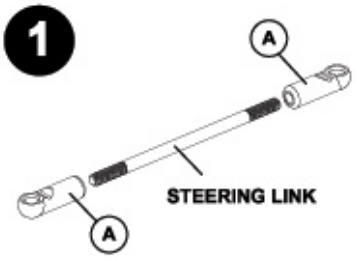

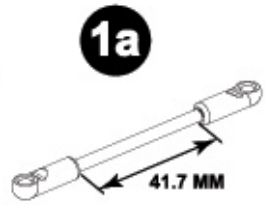



STEERING LINK



Ball Socket x 2



Ball Stud Ultra Short M3 x 1

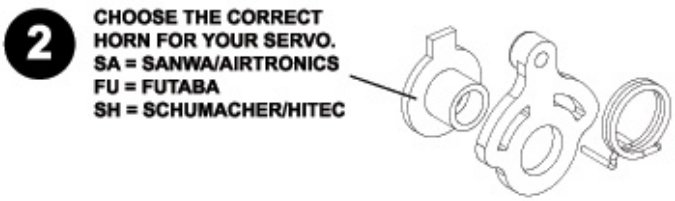

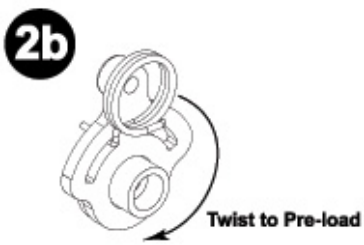



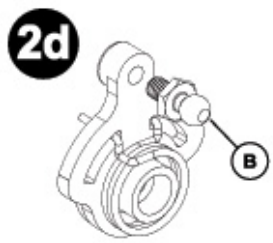

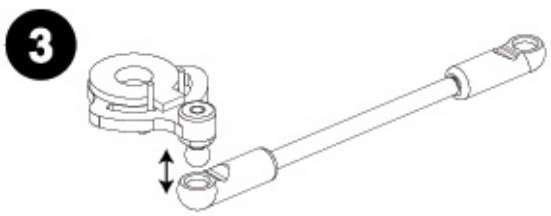

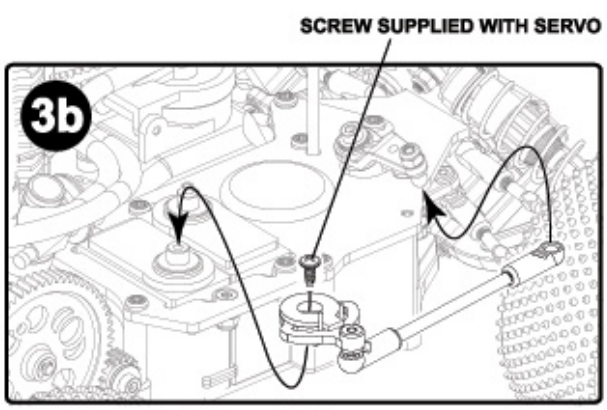

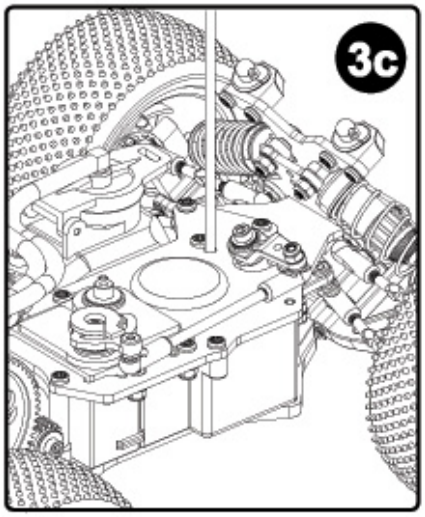

ASSEMBLE HORN SO WHEELS POINT DEAD AHEAD AT NEUTRAL

THROTTLE AND BRAKE LINKS

1

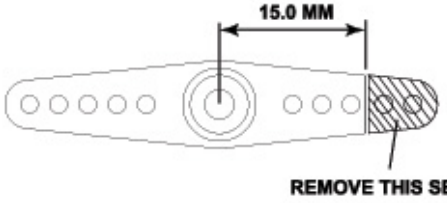

2

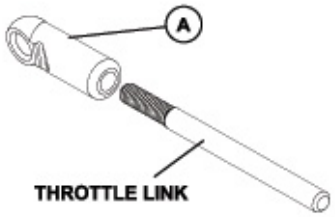

3

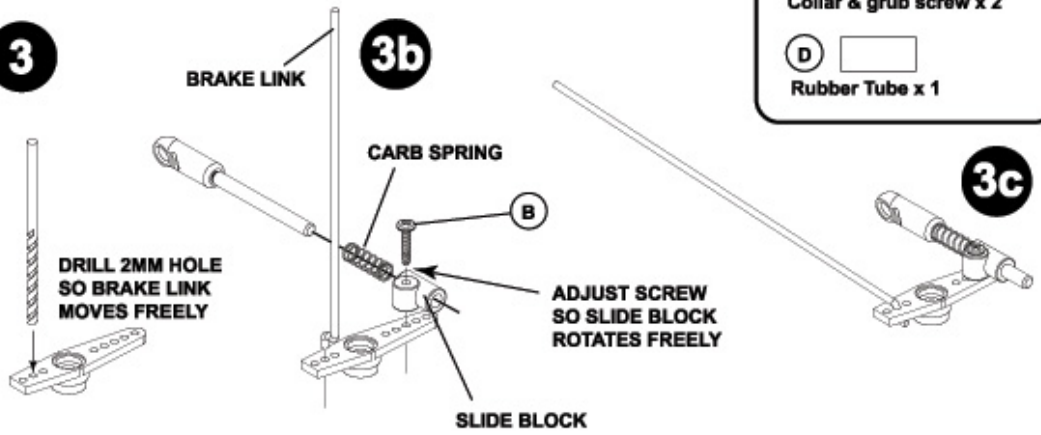

A Ball Socket x 1

B No2 3/8 Pan Head x 1

C Collar & grub screw x 2

D Rubber Tube x 1

4

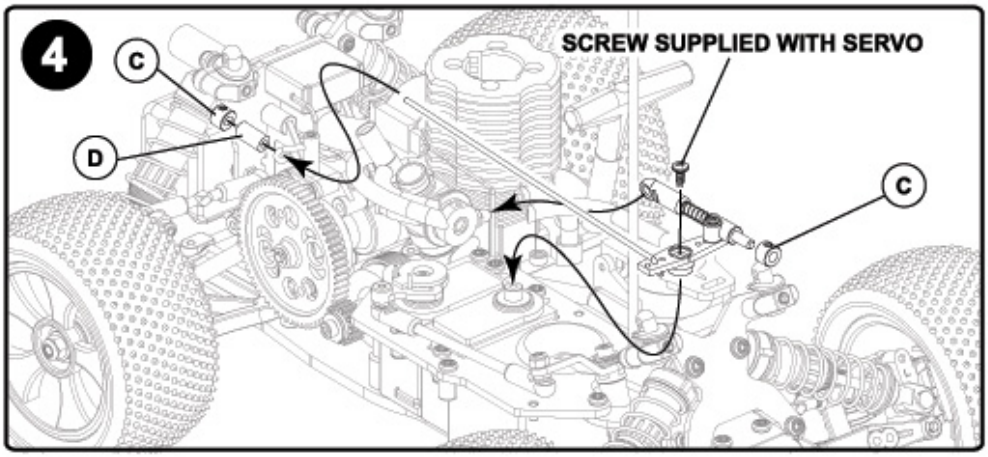

SETTING LINKS

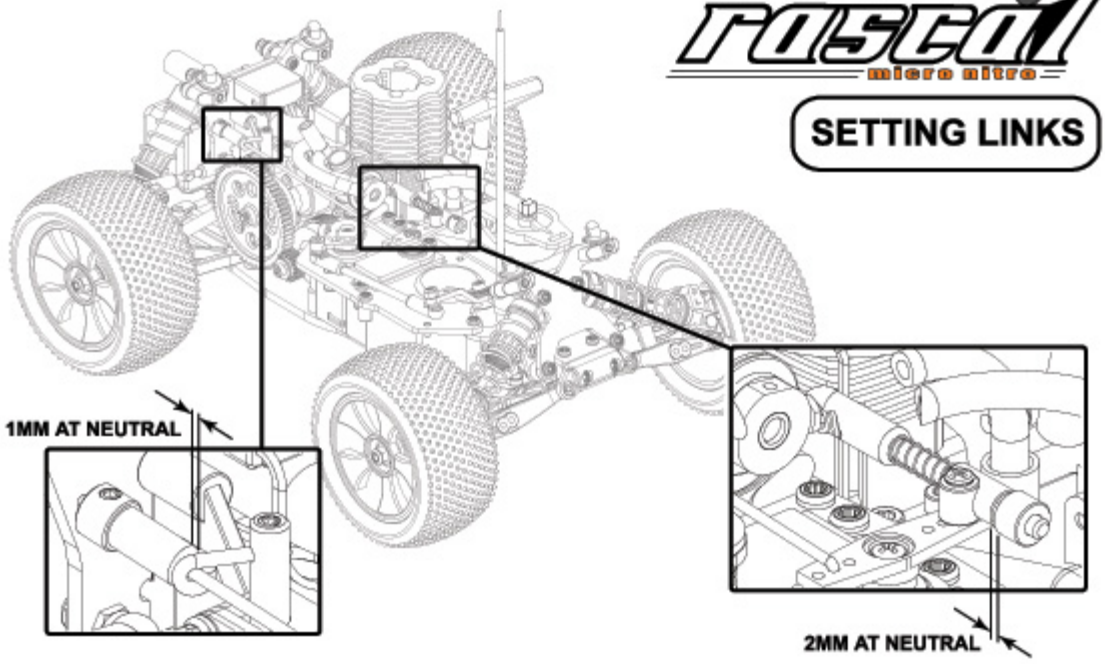

SAFETY RETURN SPRING

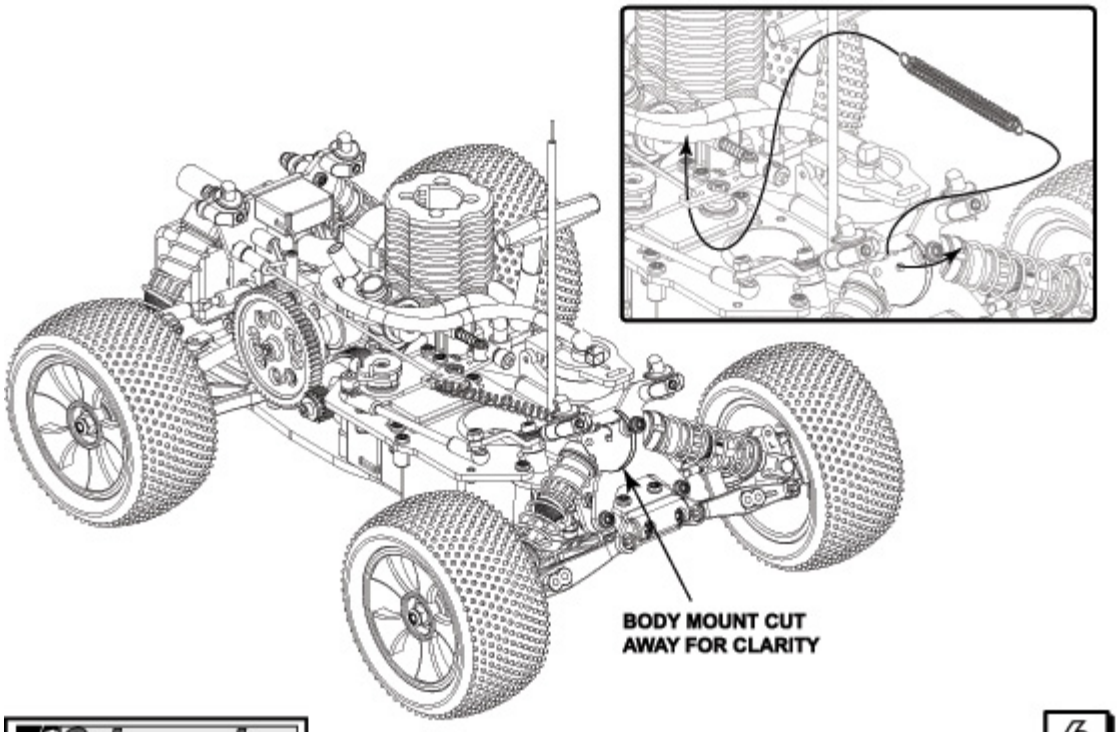

1

AIR FILTER

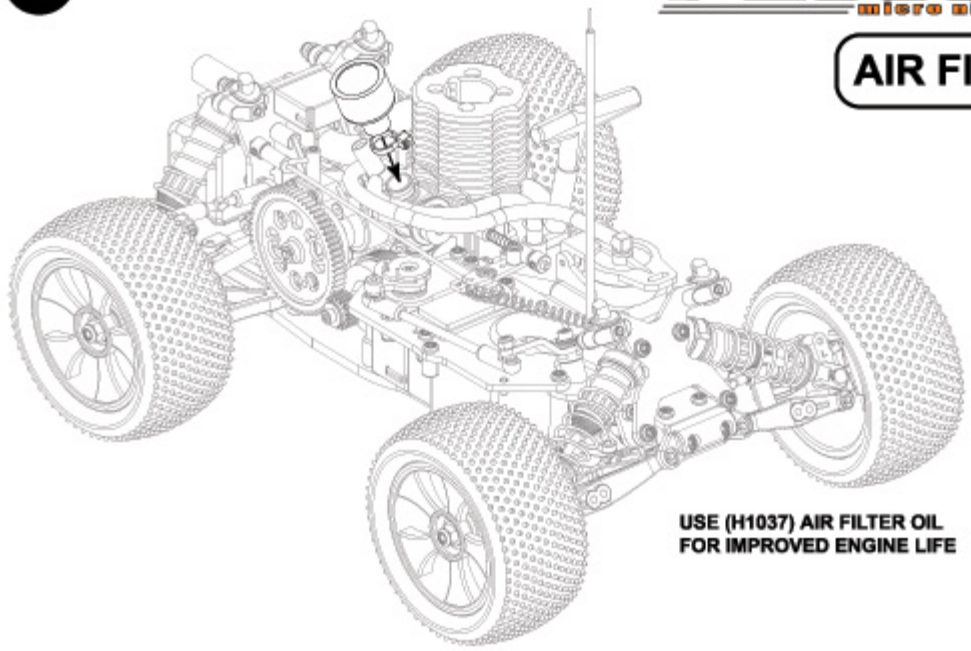

USE (H1037) AIR FILTER OIL
FOR IMPROVED ENGINE LIFE

2

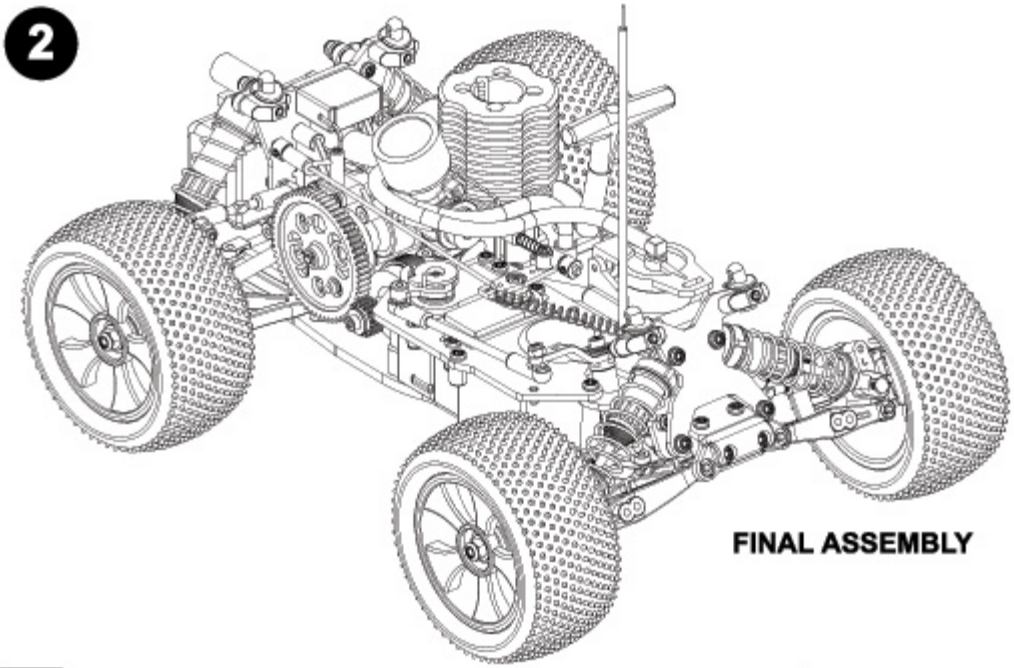

FINAL ASSEMBLY

STARTING ENGINE

1 FILL FUEL TANK

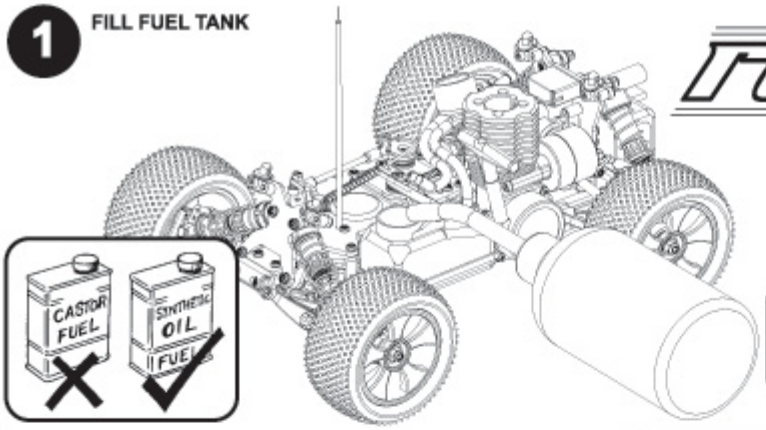

WE STRONGLY RECOMMEND MODEL TECHNICS DYNAGLOW, JETS, BLUE THUNDER, MAGNUM OR O'DONNEL 16-25% FUEL

2 PRIMING ENGINE

TURN ON TRANSMITTER.
SWITCH ON RECEIVER.
ENSURE BATTERIES ARE FULLY CHARGED.



ENSURE THROTTLE TRIM IS AT NEUTRAL, CHECK THROTTLE, BRAKE & STEERING ACTION.

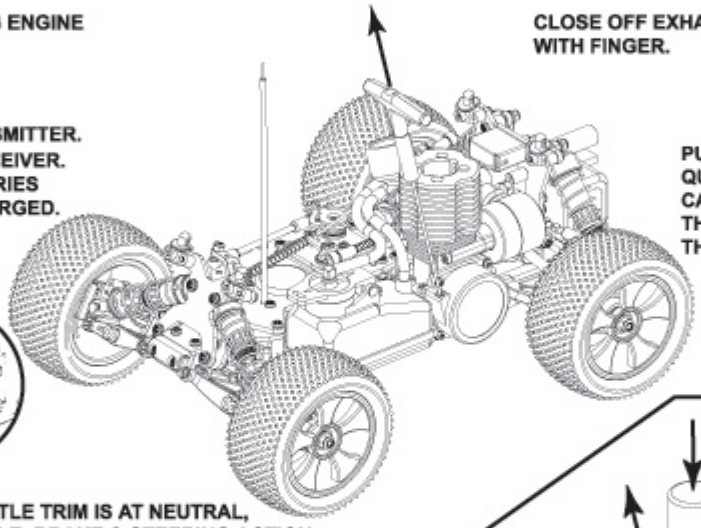

CLOSE OFF EXHAUST WITH FINGER.

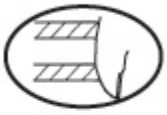

PULL STARTER IN SHORT, QUICK BURSTS UNTIL FUEL CAN BE SEEN ENTERING THE CARBURETOR THEN THREE MORE PULLS.

HOLD GLOW START ONTO GLOW PLUG

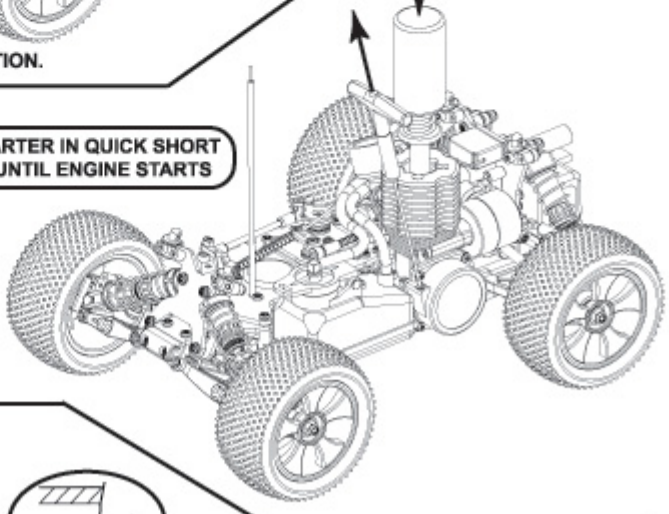

3 STARTING ENGINE

PULL STARTER IN QUICK SHORT BURSTS UNTIL ENGINE STARTS

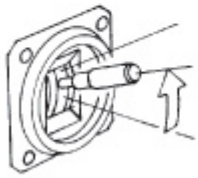

GENTLY REV THE ENGINE THEN REMOVE THE GLOW START

4 STOPPING ENGINE

WARNING:

ENGINE AND SILENCER WILL BE VERY HOT DO NOT TOUCH FOR SEVERAL MINUTES

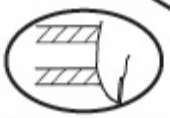

ENSURE ENGINE IS AT IDLE BEFORE STOPPING. STOP ENGINE BY BLOCKING THE EXHAUST.

IDLE SPEED SETTING

TRANSMITTER ZERO/NEUTRAL



ENGINE STALLS = SCREW THROTTLE STOP SCREW CLOCKWISE TO INCREASE REVS



CAR DOES NOT MOVE AND SOME SMOKE = OK



CAR EDGES FORWARD = SCREW THROTTLE STOP SCREW ANTI-CLOCKWISE TO LOWER REVS

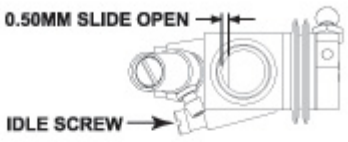

SET IDLE SPEED AS HIGH AS POSSIBLE WITHOUT THE CAR EDGING FORWARD

LOW SPEED MIXTURE SETTING

TRANSMITTER - STOP-GO (MAX ACCELERATION)



TOO MUCH SMOKE AND SLOW ACCELERATION (TOO RICH)
SCREW LOW SPEED MIXTURE SCREW CLOCKWISE

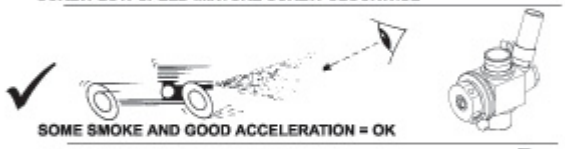

SOME SMOKE AND GOOD ACCELERATION = OK



CAR EDGES FORWARD THEN STALLS
(TOO LEAN) SCREW LOW SPEED MIXTURE SCREW ANTI-CLOCKWISE

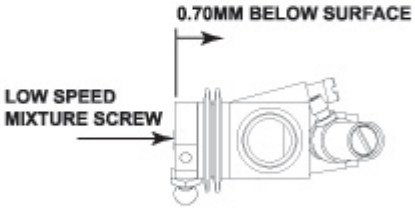

HIGH SPEED MIXTURE SETTING

TRANSMITTER MAX FULL SPEED



TOO MUCH SMOKE AND SLOW SPEED (TOO RICH)
SCREW HIGH SPEED MIXTURE SCREW CLOCKWISE



SOME SMOKE AND GOOD SPEED = OK



TOO LITTLE SMOKE AND SLOW SPEED (TOO LEAN)
SCREW HIGH SPEED MIXTURE SCREW ANTI-CLOCKWISE

2½ TURNS OPEN (ANTI-CLOCKWISE) FROM FULLY CLOSED

HIGH SPEED MIXTURE SCREW



IF THE CAR BEGINS TO LOSE PERFORMANCE AFTER A FEW MINUTES IT IS PROBABLY OVERHEATING (TOO LEAN). YOU MST STOP AND SCREW THE HIGH SPEED MIXTURE SCREW 1/4 TURN ANTI-CLOCKWISE

SETTINGS GIVEN ARE FOR A STARTING POINT ONLY SMALL ADJUSTMENTS MAY BE REQUIRED

DO NOT ALLOW THE NOISE TO ANNOY OTHERS
DO NOT OPERATE THE "CAR" ON THE PUBLIC HIGHWAY
DO NOT OPERATE THE "CAR" IN A CONFINED SPACE OR CROWDED AREA
DO NOT RUN ENGINE WITHOUT AIR FILTER - SERIOUS DAMAGE WILL RESULT
DO NOT ALLOW THE TRANSMITTER OR RECEIVER BATTERIES TO RUN FLAT

RUNNING ENGINE IN FROM NEW

To ensure your engine has a long life the engine needs to be "run in" before being "raced".
Run the car for 2 or 3 tank fulls, at a rich
Carb setting on half throttle, do not use full throttle

AFTER RUNNING IN

After "running in" is complete, and you have re-tuned the high and low end mixture screws for maximum power, you may need to reset the idle speed to prevent the car from "creeping" forward at neutral. This must be done with the IDLE SPEED SCREW on the carburettor NOT with the throttle trim on the radio, which will only apply the brakes. Applying the brakes will leave the clutch dragging and lead to over-heating.

SEE PAGE NINE FOR HOW TO SET YOUR IDLE SPEED.

The following information will help solve any problems when running and maintaining your car

PROBLEM	CAUSE	REMEDY
ENGINE DOES NOT START	FUEL TANK EMPTY, ENGINE NOT PRIMED	FILL TANK AND REPRIME ENGINE
	FLAT GLOW BATTERY OR DEAD GLOW PLUG	RECHARGE BATTERY AND/OR REPLACE PLUG
	CLOGGED AIR FILTER	CLEAN OR REPLACE AIR FILTER
	OVER PRIMED, CYLINDER FLOODED WITH FUEL	REMOVE GLOW PLUG THEN TURN ENGINE OVER TO DISCHARGE FUEL
	INCORRECT CARBURETTOR ADJUSTMENT	CHECK SETTINGS
	INCORRECT LINKAGE ADJUSTMENT	RE ADJUST LINKS WITH SERVO IN NEUTRAL SEE MANUAL
	WORN ENGINE - PISTON LINER	REPLACE PISTON LINER
ENGINE STALLS	FUEL TANK EMPTY	FILL FUEL TANK
	CLOGGED AIR FILTER	CLEAN OR REPLACE AIR FILTER
	INCORRECT CARBURETTOR ADJUSTMENT	RE ADJUST CARBURETTOR SETTINGS
	ENGINE OVER HEATING	ALLOW ENGINE TO COOL DOWN AND OPEN HIGH SPEED MIXTURE SCREW 90°
POOR ENGINE RESPONSE	INCORRECT CARBURETTOR ADJUSTMENTS	RE ADJUST CARBURETTOR SETTINGS
	FUEL TANK PRESSURE PIPE LOOSE, DETACHED OR DAMAGED OR BLOCKED	REPLACE OR REFIT PRESSURE PIPE
	WORN ENGINE - PISTON LINER	REPLACE PISTON LINER
POOR CAR CONTROL	WEAK BATTERIES IN TRANSMITTER	RECHARGE OR REPLACE BATTERIES
	WEAK RECEIVER BATTERIES	RECHARGE OR REPLACE BATTERIES
	TRANSMITTER AERIAL NOT FULLY EXTENDED	EXTEND AERIAL
	POOR ADJUSTMENT OF LINKS	RE-ADJUST LINK TO INSTRUCTIONS

IMPORTANT - REGULAR MAINTENANCE

Check differential adjustment, check all screws are tight, check gear mesh Adjustment. Oil bearings and keep car clean.

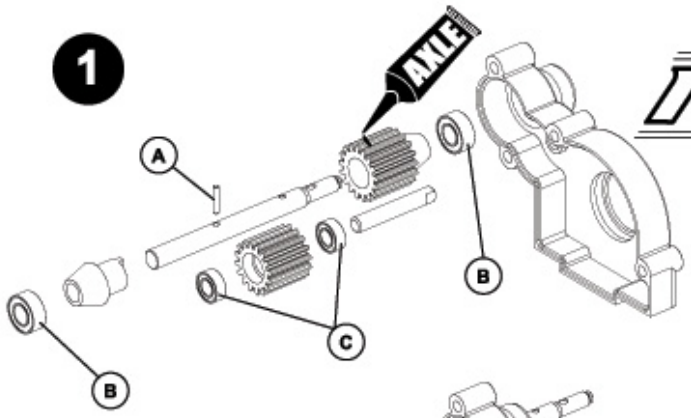

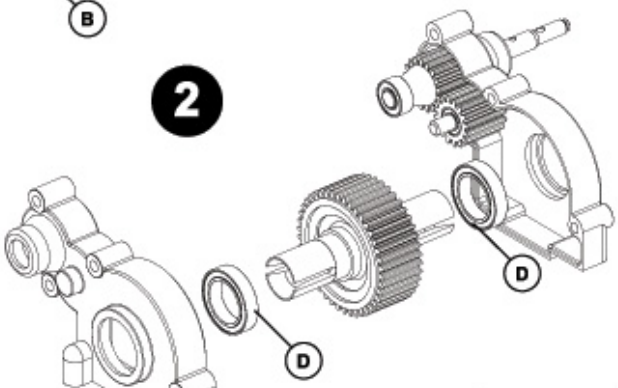

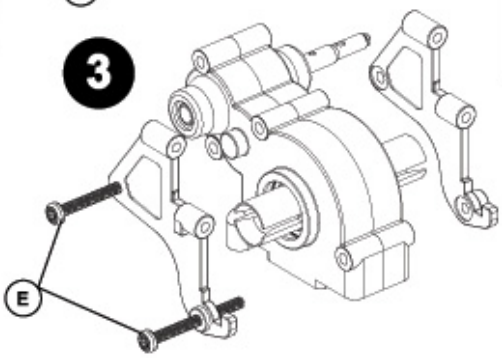

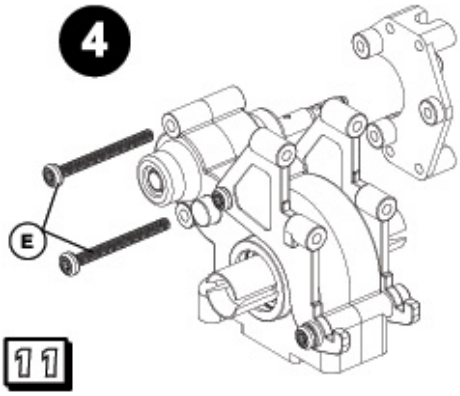

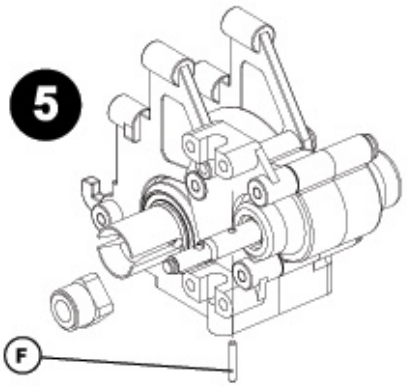

TRANSMISSION

A
1.5mm x 7.8mm Pin x 1

B
5 x 10 x 4mm Bearing x 2

C
4 x 8 x 3mm Bearing x 2

D
12 x 18 x 4mm Bearing x 2

E
M3 x 30 Pan TORX Head x 4

F
1.5mm x 9.8mm Pin x 1

Schumacher

6

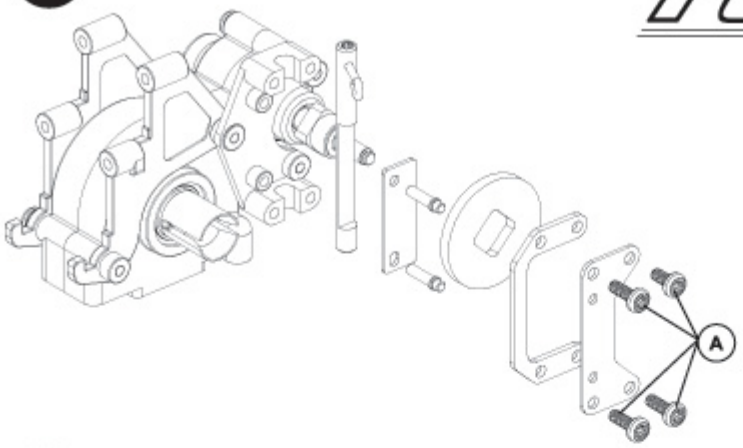

TRANSMISSION Continued

(A) M3 x 8 Pan TORX Head x 4

(B) 2mm x 7.8mm Pin x 1

(C) "E" Clip x 1

7

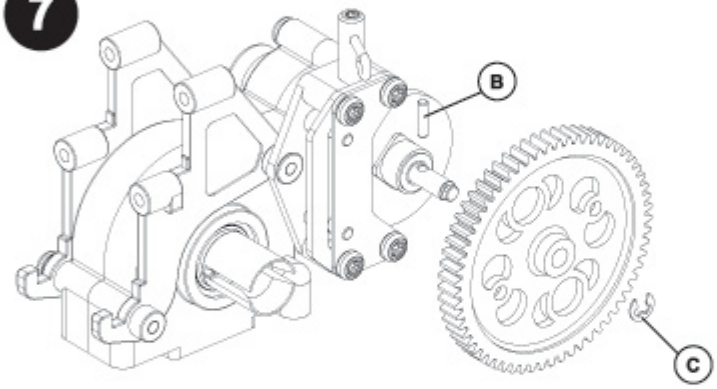

8

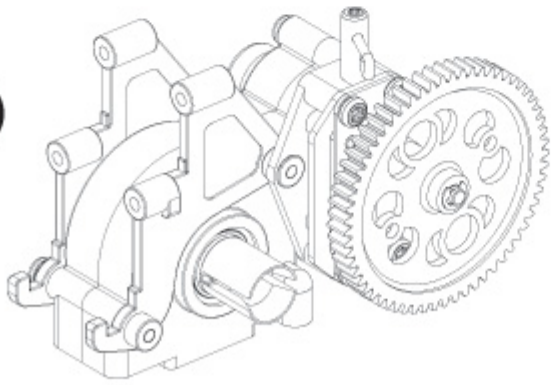

COMPLETE TRANSMISSION

DIFFERENTIAL SERVICE

NOTE:
ONLY USE SCHUMACHER
SILICONE GREASE
PART # U1301

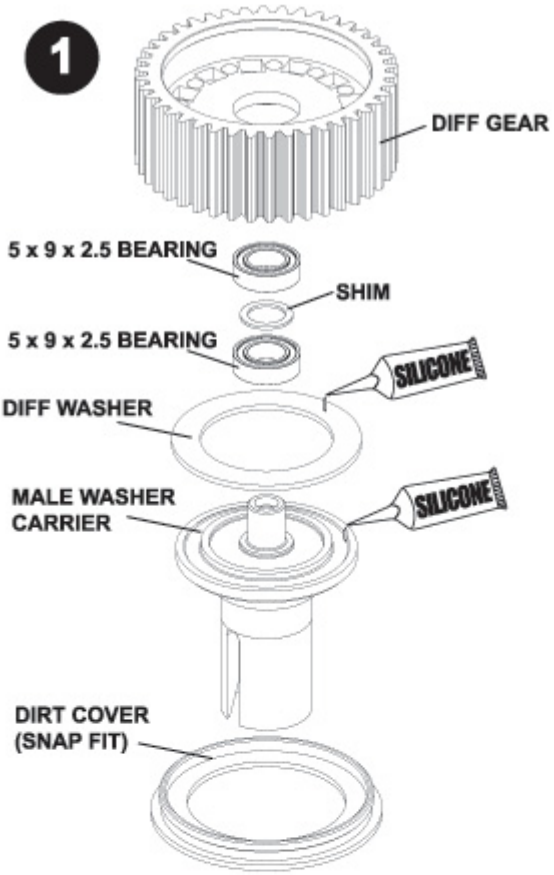

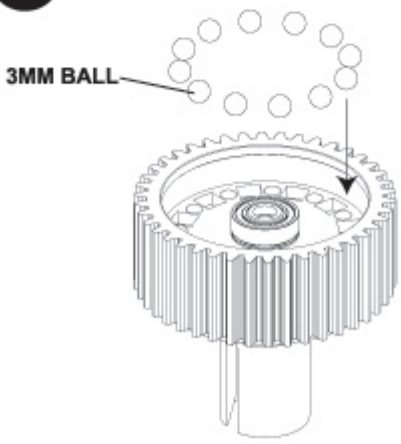

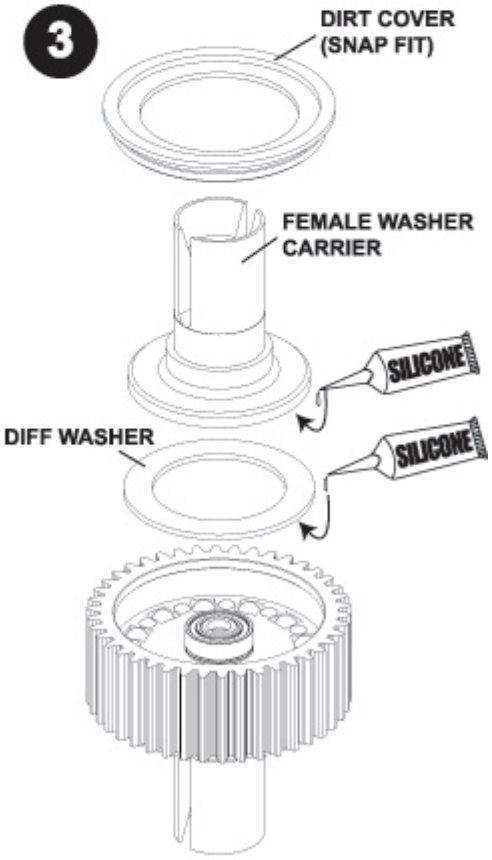

DIFFERENTIAL SERVICE Continued

4

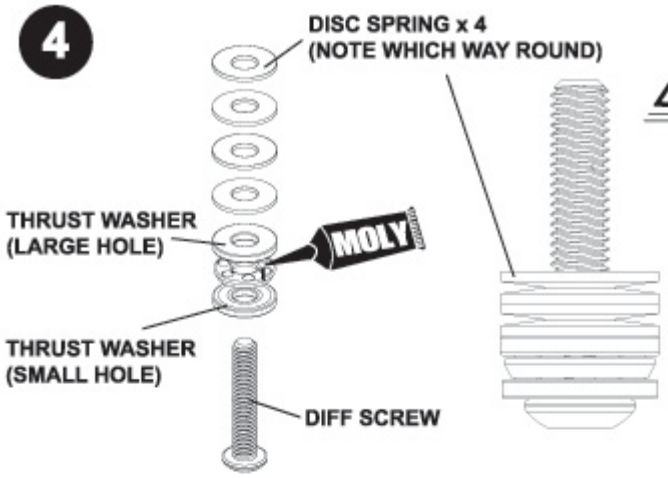

NOTE:
ONLY USE SCHUMACHER
MOLY AXLE GREASE
PART # U1957

MOLY

5

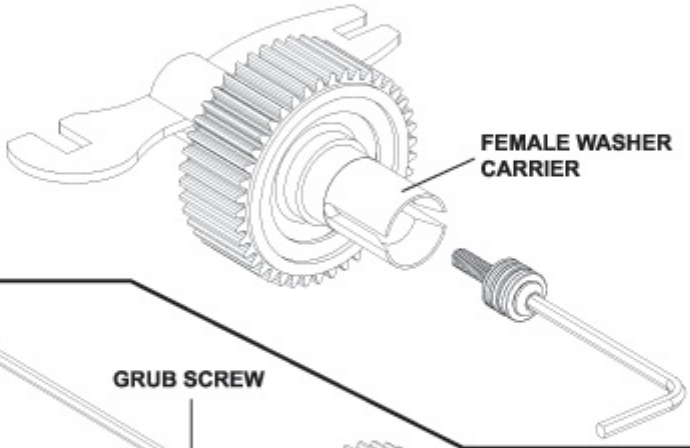

6

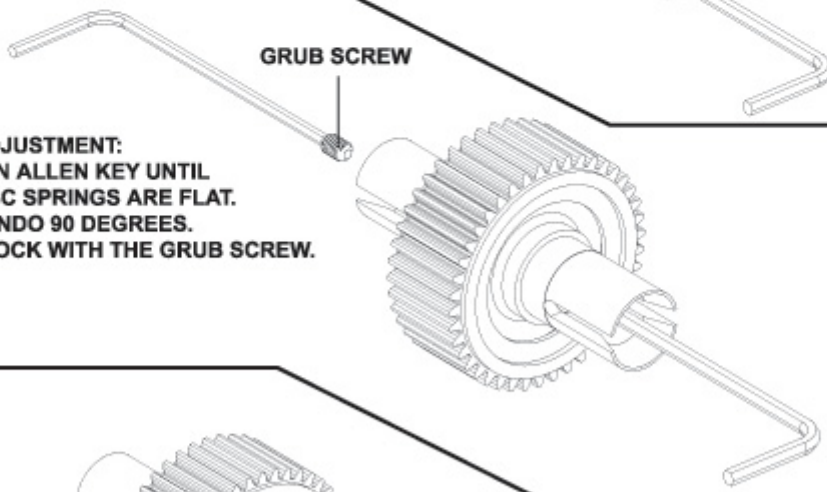

DIFF ADJUSTMENT:
TIGHTEN ALLEN KEY UNTIL
THE DISC SPRINGS ARE FLAT.
THEN UNDO 90 DEGREES.
THEN LOCK WITH THE GRUB SCREW.

7

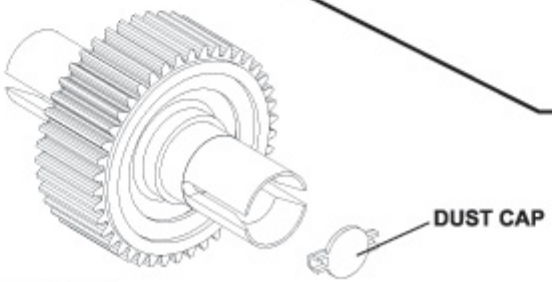

SHOCK ABSORBERS

A

"E" Clip x 8

1

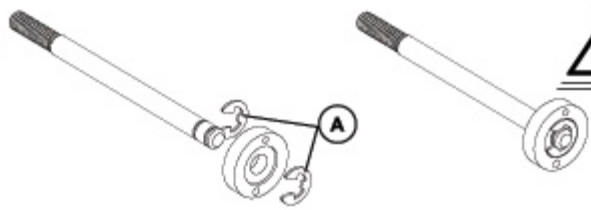

2



3

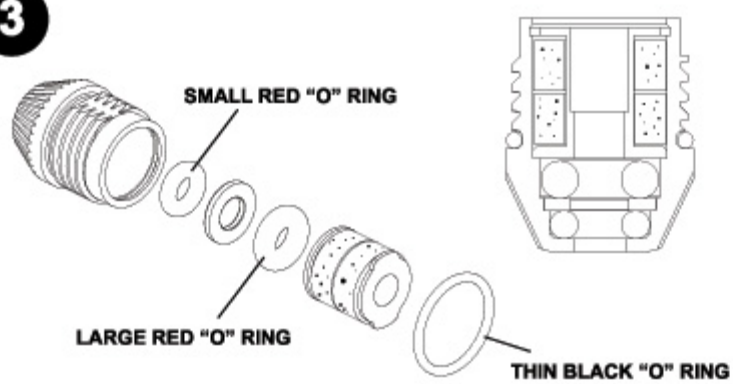

4

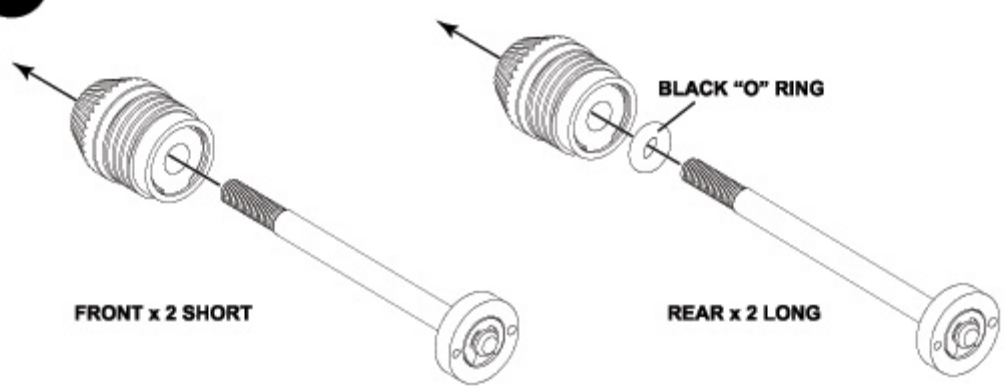



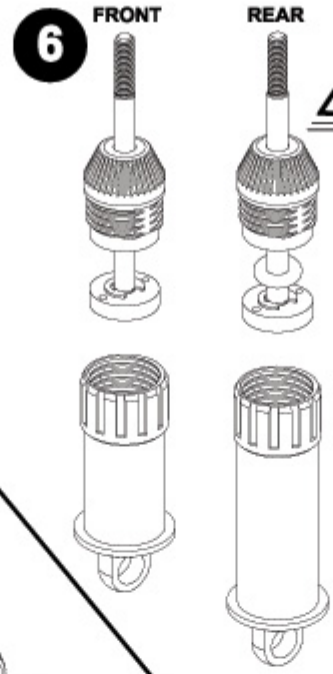

rascal micro nitro

SHOCK ABSORBERS Continued



2mm Plastic Spacer x 2

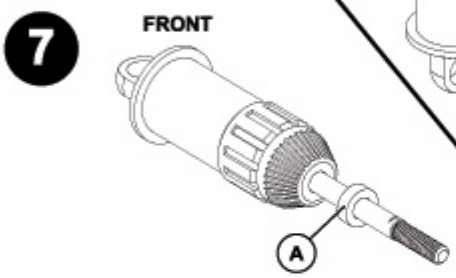

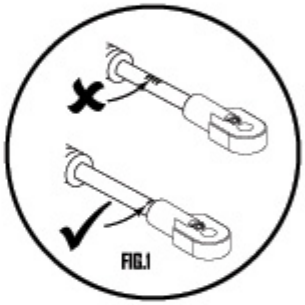

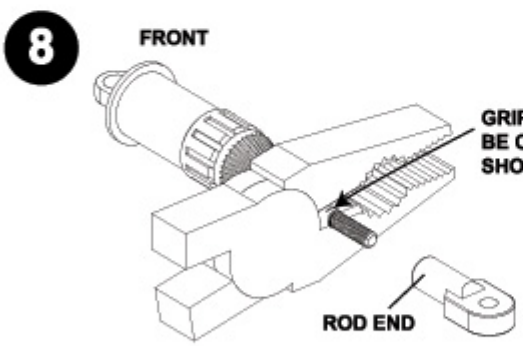

GRIP THE PISTON ROD TO FORM A DENT
BE CAREFUL NOT TO DAMAGE THE POLISHED
SHOCK ROD BEYOND 2MM FROM THE THREAD (SEE FIG.1).

SCREW ROD END ON TO SHAFT
UNTIL NO THREAD IS SHOWING,
BUT NO MORE.

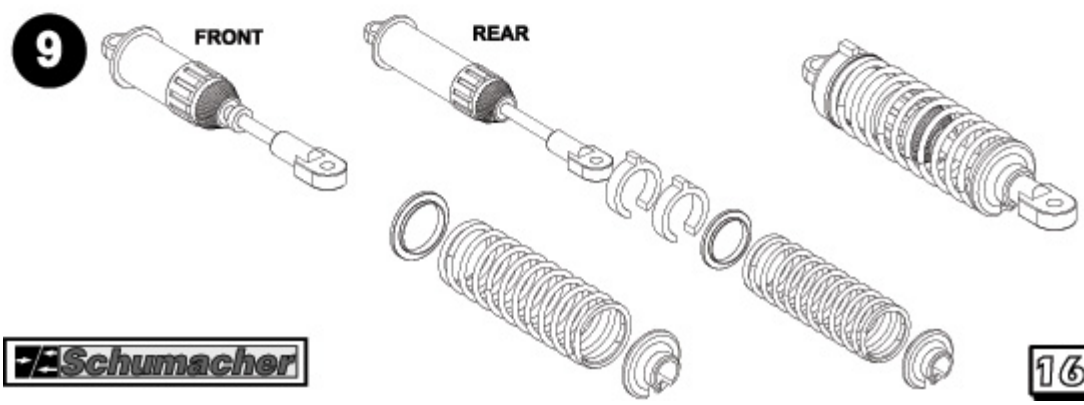

REAR SUSPENSION

A
M3 Nyloc Nut

B
Ball Stud Long M3

C
"E" Clip

D
10 x 15 x 4mm Bearing

E
M4 x 25mm Hex Bolt

F
Tiny "E" Clip

1

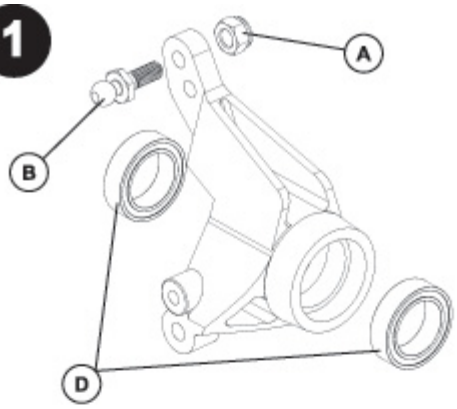

2

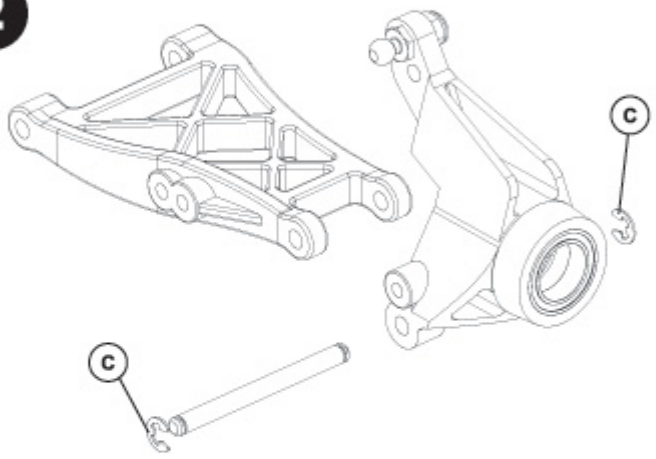

3

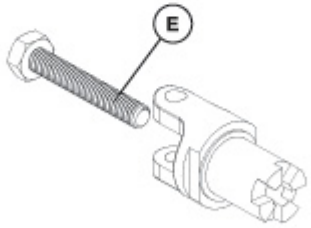

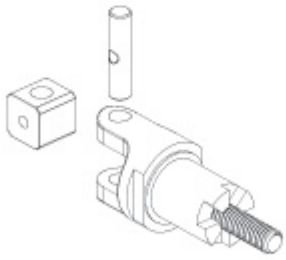

4

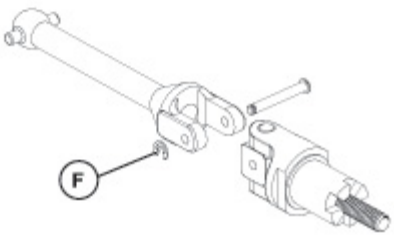

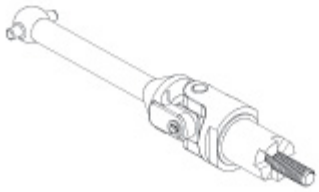

5

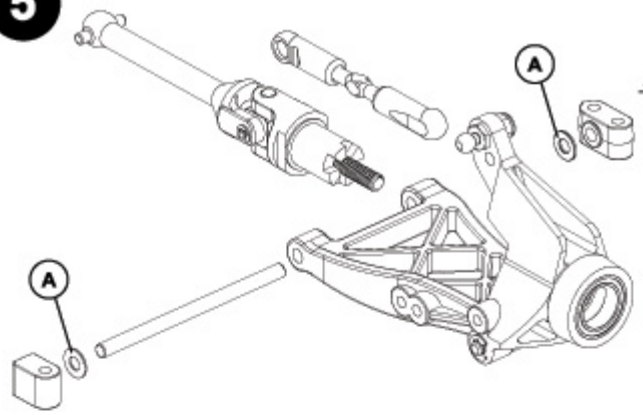

REAR SUSPENSION Continued

A — M3 Washer

B — M3 x 12 Csk TORX

6

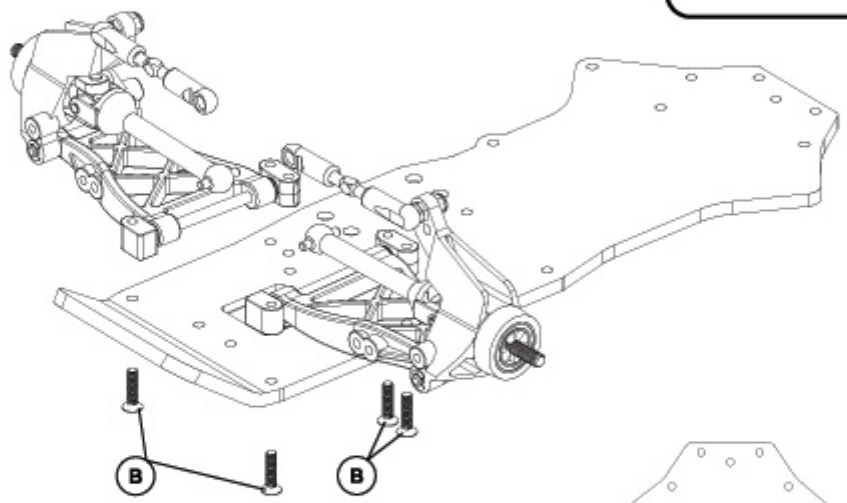

7

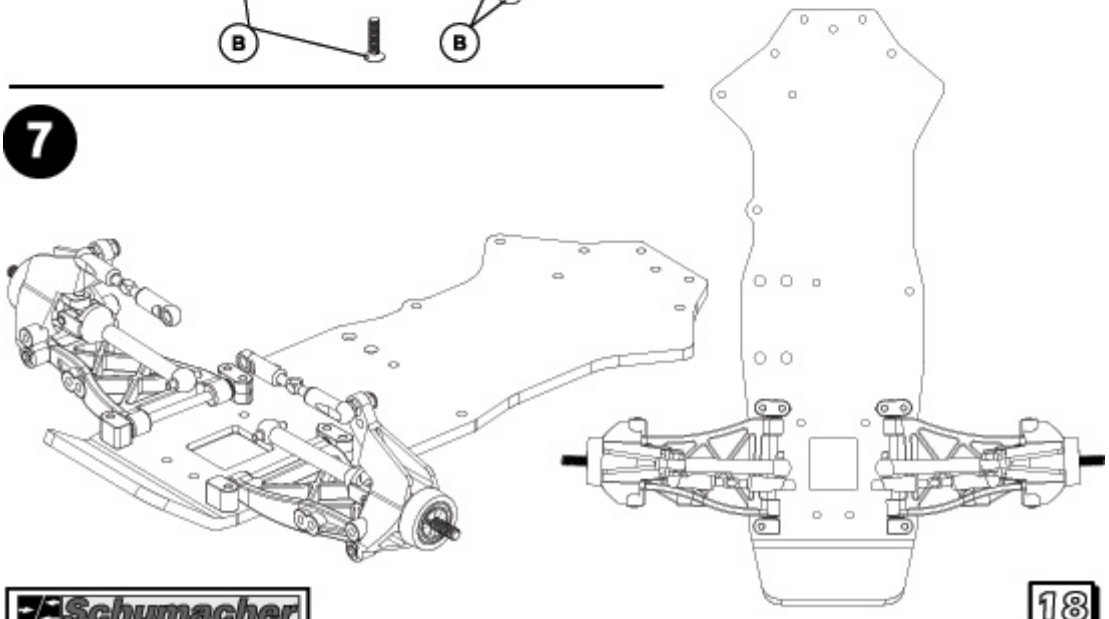

1

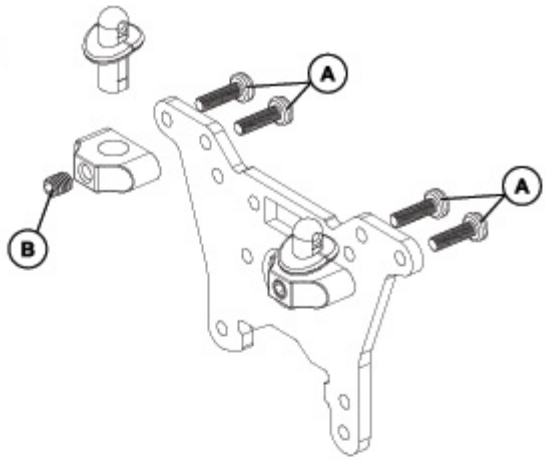

2

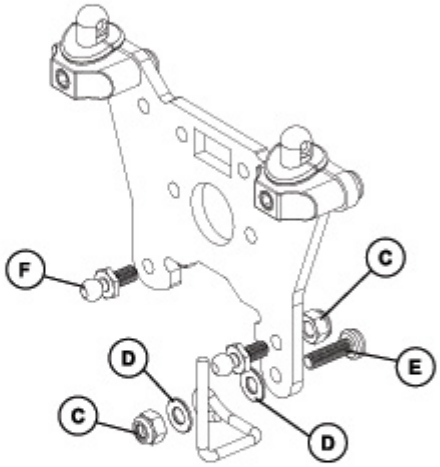

3

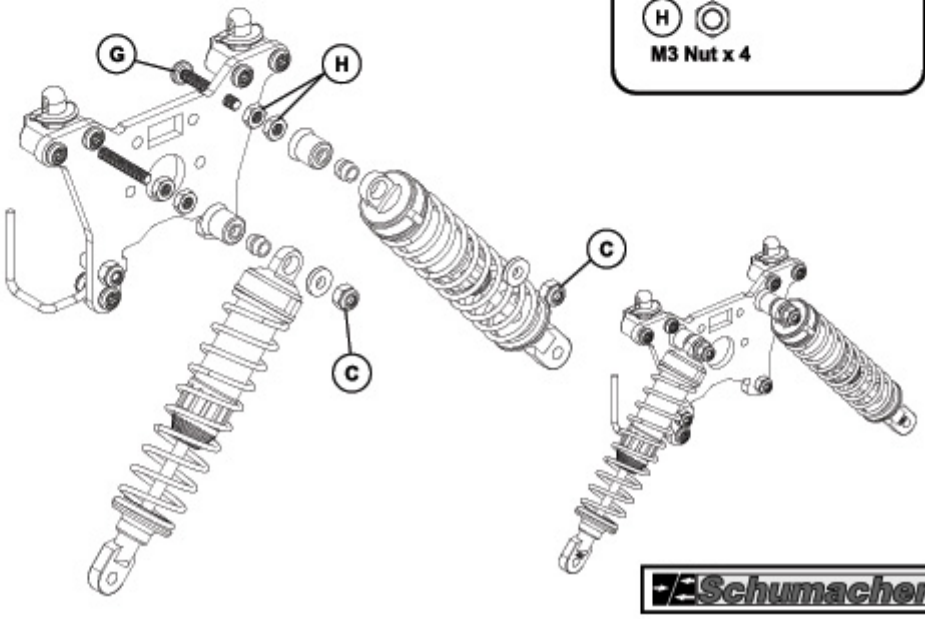

REAR END

A
M3 x 8 Pan Hd TORX x 4

B
M4 x 6 Grub x 2

C
M3 Nyloc Nut x 5

D
M3 Washer x 2

E
M3 x 10 Pan Hd TORX x 1

F
Ball Stud Short x 2

G
M3 x 20 Pan Hd TORX x 2

H
M3 Nut x 4

4

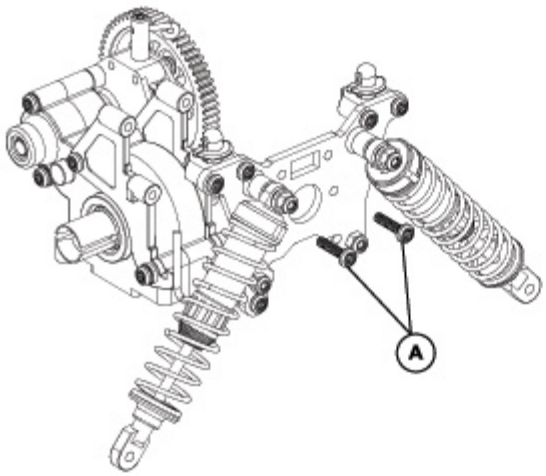

rascal
micro nitro

REAR END Continued

A
M3 x 12 Pan Hd TORX x 2

B
M3 x 10 Csk Hd TORX x 2

C
M3 x 10 Pan Hd TORX x 2

5

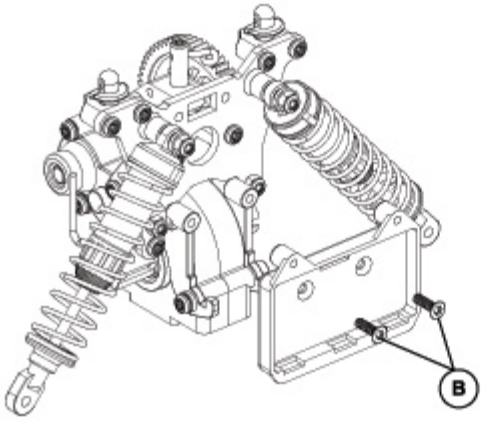

6

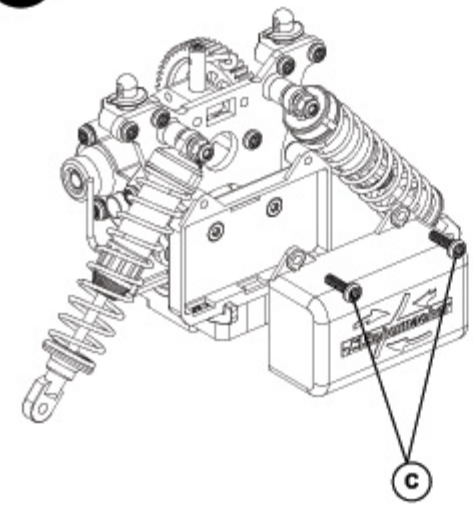

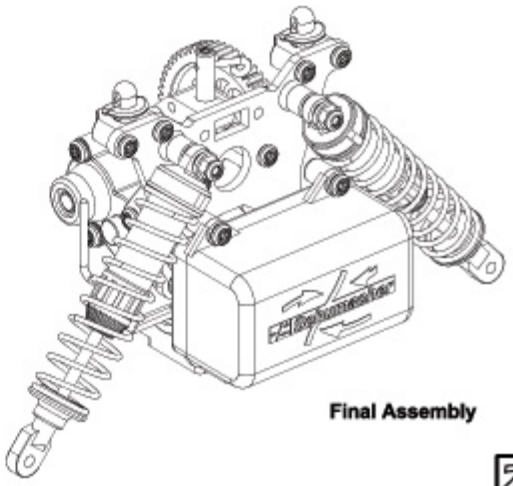

Final Assembly

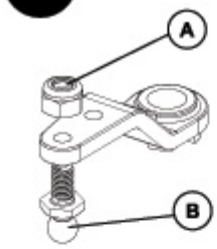

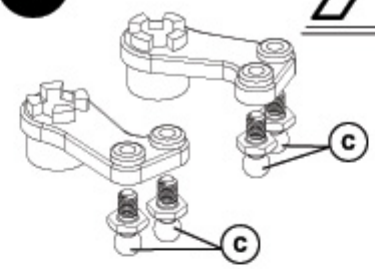

STEERING

- A — M3 Nyloc Nut x 3
- B — Ball Stud Short x 1
- C — Ball Stud Ultra Short M3 x 4
- D — M3 Thrust Washer x 2
- E — M3 x 25 Cap Hd x 1
- F — M3 x 45 Cap Hd x 1

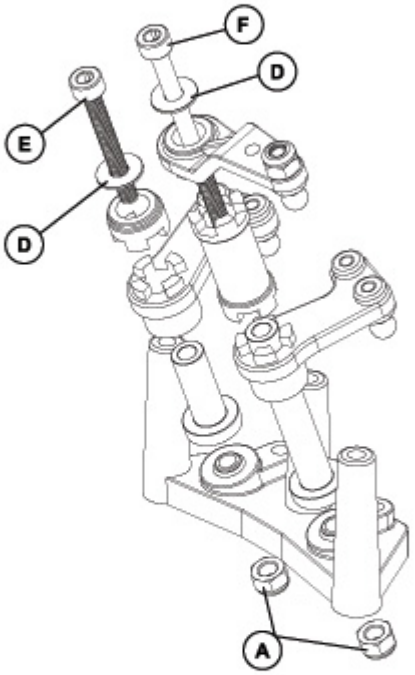

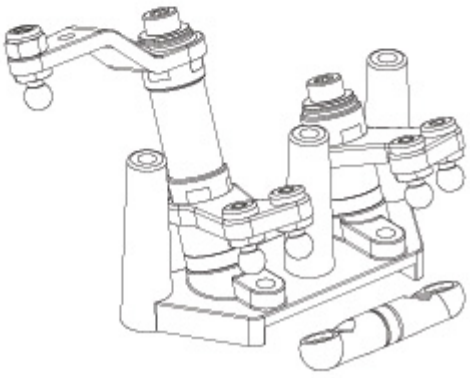

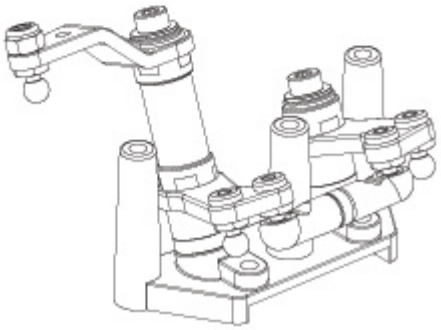

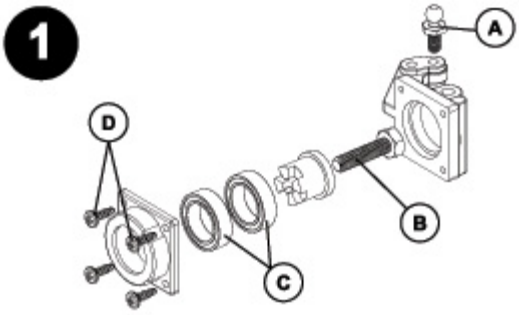

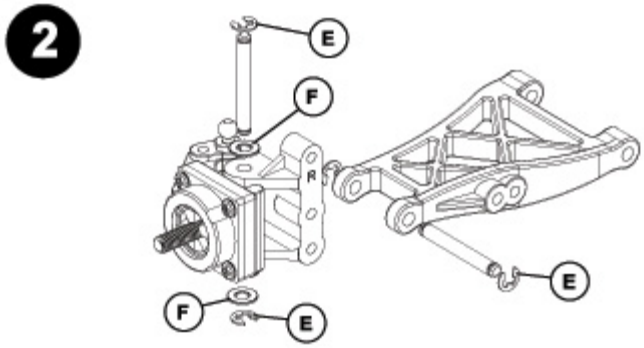

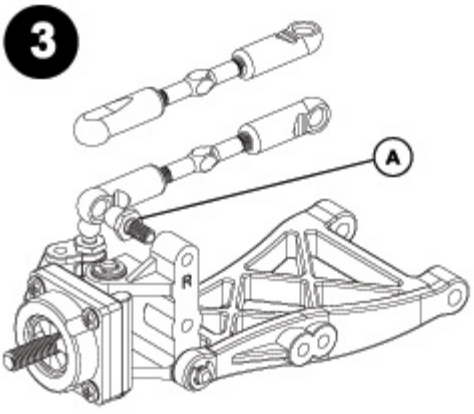

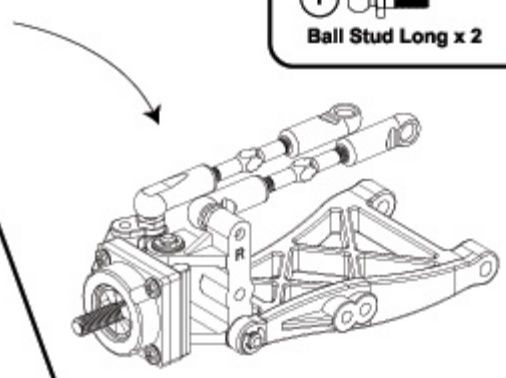

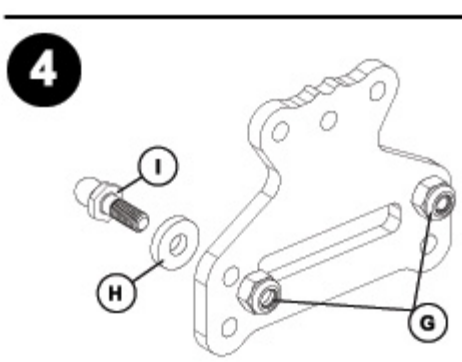

FRONT END

A
Ball Stud Short x 4

B
M4 x 16 Hex Bolt x 2

C
10 x 15 x 4mm Bearing x 4

D
No 2 x 3/8" Pan x 8

E
"E" Clip x 8

F
M3 Washer x 4

G
M3 Nyloc Nut x 2

H
1.6mm Spacer x 2

I
Ball Stud Long x 2

6

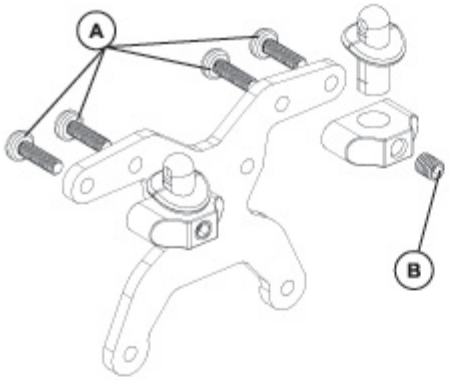

7

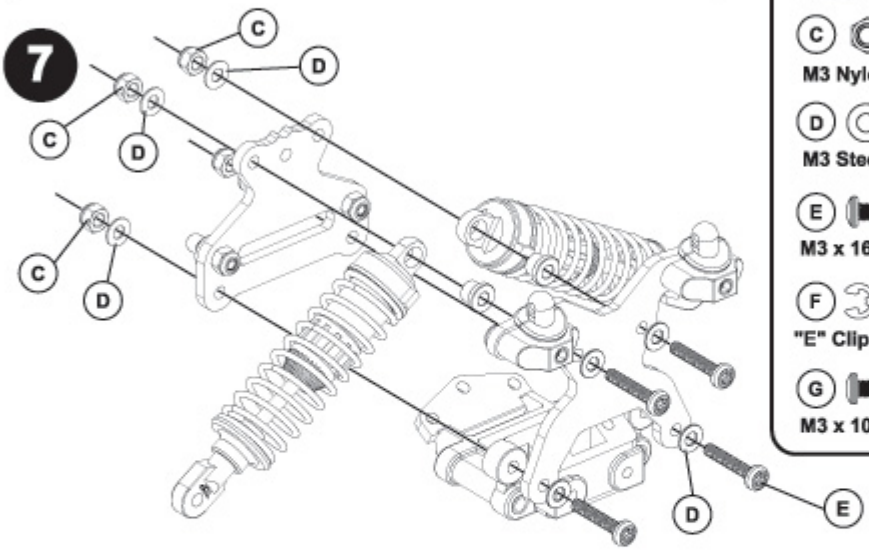

8

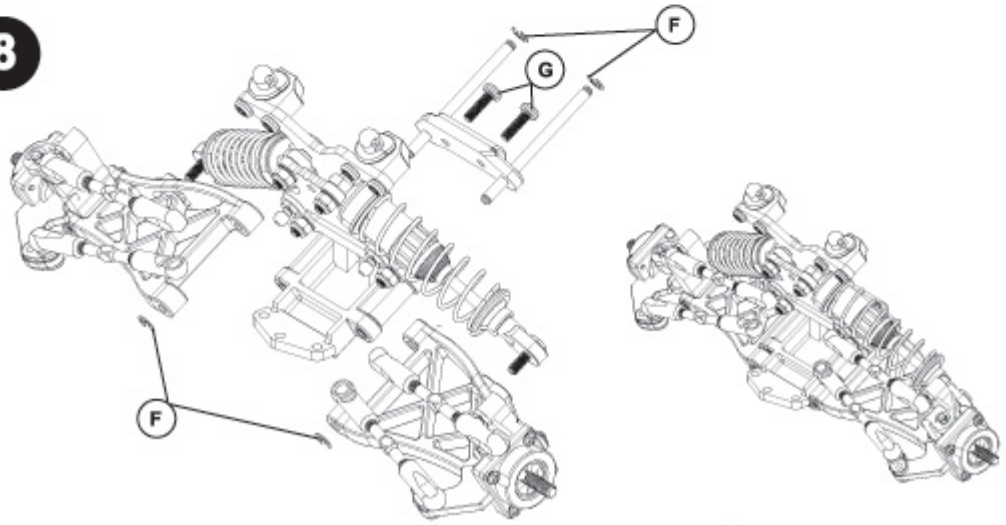

FRONT END Continued

A
M3 x 8 Pan TORX x 4

B
M4 x 6 Grub x 2

C
M3 Nyloc Nut x 4

D
M3 Steel Washer x 6

E
M3 x 16 Pan TORX Head x 4

F
"E" Clip x 4

G
M3 x 10 Pan TORX Head x 2

1

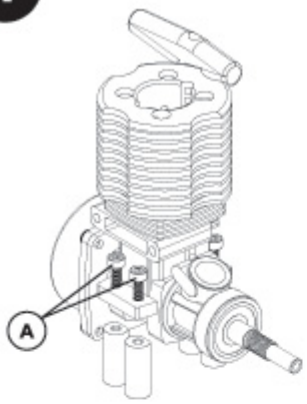

POWER UNIT

A
M3 x 12 Cap Hd x 4

B
M3 x 25 Cap Hd x 2

C
Ball Stud Ultra Short M3 x 1

D
M3 x 3 Grub Screw x 2

2

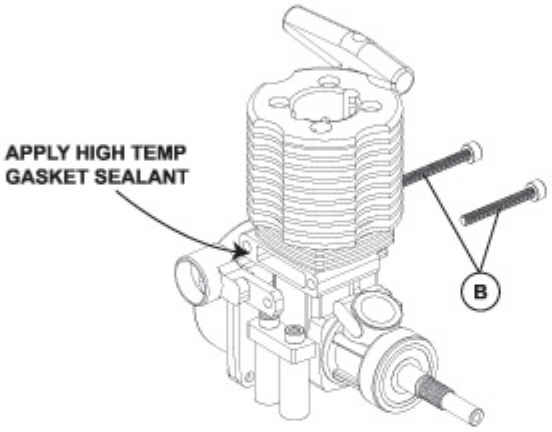

3

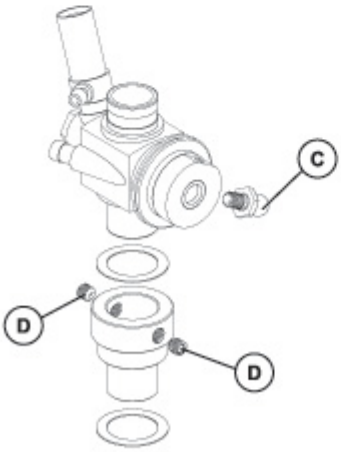

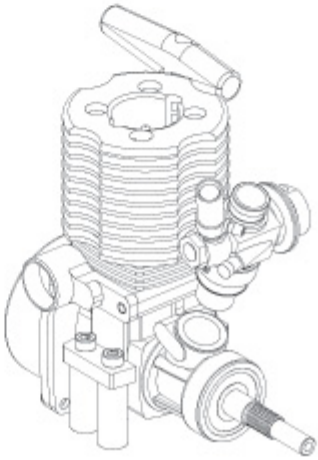

4

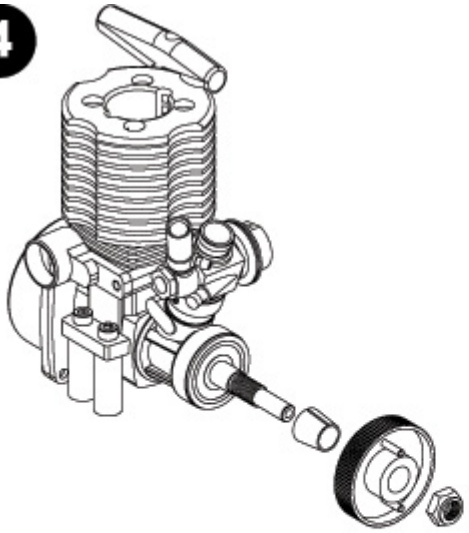

rascal micro nitro

POWER UNIT Continued

(A) 5mm -Thin Shim x 1

(B) 1.5mm x 11.8mm Pin x 13

(C) M3 x 8 Cap Head x 1

5

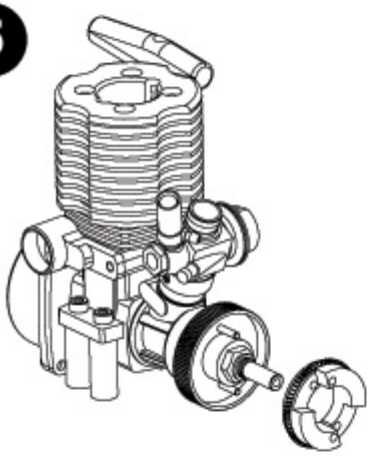

6

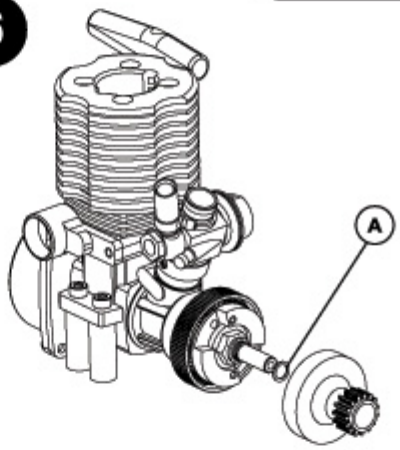

7

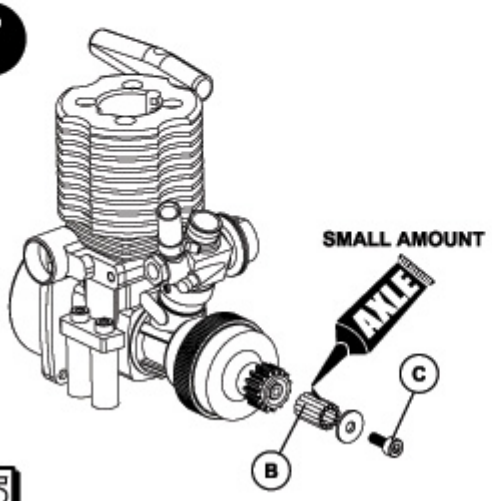

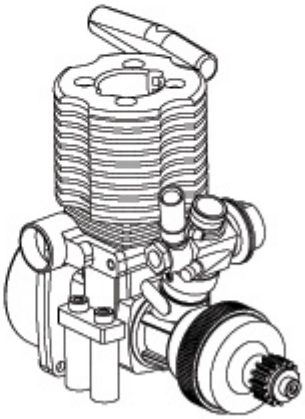

Schumacher

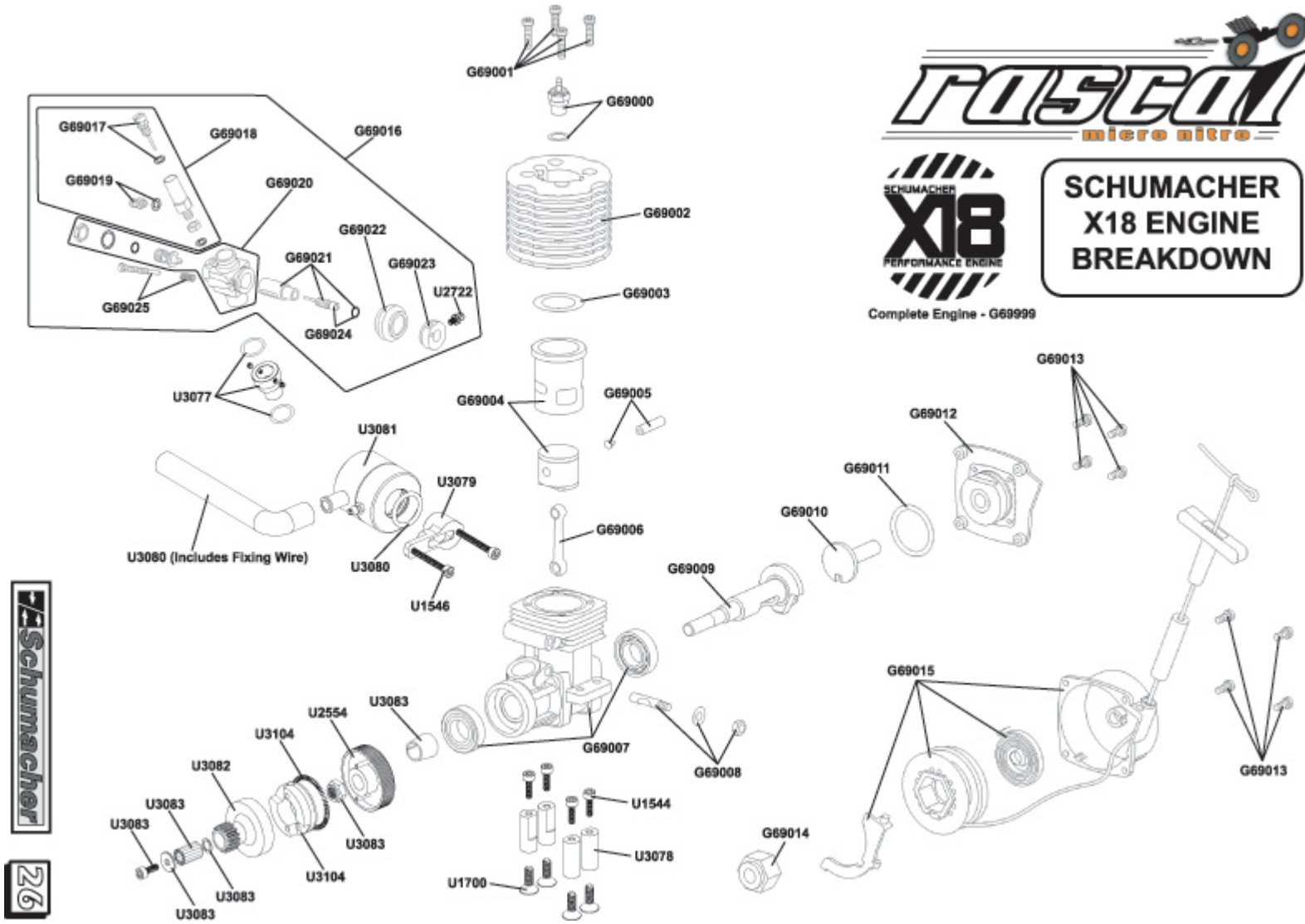
G69001
G69000
G69017
G69018
G69016
G69019
G69020
G69002
G69022
G69021
G69023
U2722
G69025
G69024
G69003
U3077
G69004
G69005
U3081
G69013
G69012
G69011
U3079
G69010
U3080 (Includes Fixing Wire)
U3080
G69006
U1546
G69009
U3083
U2554
U3104
G69007
G69008
U3082
U3083
U3083
U3083
U3104
U3083
U3083
U1544
U3078
U1700
G69014
G69015
G69013
SCHUMACHER
X18
PERFORMANCE ENGINE
Complete Engine - G69999
SCHUMACHER
X18 ENGINE
BREAKDOWN
rascal
micro nitro
Schumacher
26



SPEED SECRETS

Purple Alloy Air Filter
U3045
Dual Stage Foam

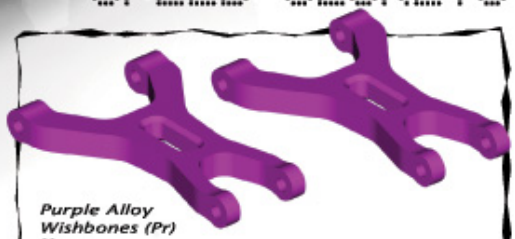

Purple Alloy Wishbones (Pr)
U3093



Purple Alloy Hinge Pin Blocks
U3096

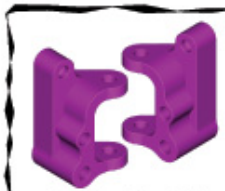

Purple Alloy Yokes
U3091



Purple Alloy Rear Hub Carriers (Pr)
U3092



Purple Alloy Front Hubs
U3090



Purple Alloy Body Mount Blocks and Posts (Pr)
U2165



Purple Alloy Shock Seal Housings (Pr)
U1818



Purple Alloy Shock Bodies (Pr)
U2660 - Rear
U3095 - Front



Rear Shock Spring Set (5 Pairs)
U1353



Two Speed Gear Set
U3094



Purple Titanium Turnbuckles (39mm)
U1572



Front Shock Spring Set (5 Pairs)
U1352



Purple Titanium Turnbuckles (35mm)
U1905

Blue – A general purpose, hard wearing compound.

Green – Slightly softer than Blue, but works right through from wet to dry.

Yellow – Softer. Use on very dry days and indoor (Carpet and Polished wood).

B30 – High Grip Tarmac Tyre.

rascal micro nitro



Mini Pin 2.2"
Blue – U6602
NB: Standard Front Tyre
Yellow – U6608
NB: Standard Rear Tyre



Mini Spike 2.2"
Green – U6516
Blue – U6518
Yellow – U6558



Block 2"
Blue – T692



M4 Wheel Spanner (Nut Driver)
U2796



RT1 Street 2.1"
Green – U6614
B30 – U6710



RT2 Street 2.1"
Green – U6573



RT3 Street 2.1"
Green – U6586



Street Venom 88
B30 – U6720



CS Tyre Glue (Cyno)
C4450 (20g)



Rascal "5" Spoke
White (Pr) – U3086
Chrome (Pr) – U3087



Rascal "10" Spoke
White (Pr) – U3097
Chrome (Pr) – U3098



Soft Insert 2.2"
Ultra Wide – U6668



Hard Insert 2.2"
Ultra Wide – U6669
Wide – U6653





Flanged, coloured wheel nuts.

WARNING

Please read this.....

The following information is very important to the performance and reliability of your Schumacher Nitro Car. Please read it!

1. Read the instructions fully.

2. Use good quality fuel with synthetic oil such as Model Technics Dynaglow, Jets, Magnum, O'Donnel or Blue Thunder, with 16% - 25% nitro content. We do not recommend castor oil based fuels, as it leaves a "sticky residue" which can cause the Pull start one way bearing to slip. A higher nitro content fuel will give more power, but will make the engine run hotter.

3. NEVER run the engine without the air filter fitted.

4. Don't run the car at full throttle with the wheels off the ground, the engine MAY blow up in a matter of seconds.

5. Learn to use your power with respect. Very few surfaces can cope with full power. If you use full power everywhere you WILL break things!

6. ALWAYS drive your car safely, away from public roads, and be aware of any people or animals near you. MODEL CARS CAN BE DANGEROUS!

7. Always ensure the transmitter & receiver batteries are fully charged before use.

8. Never pull the Pull Start cord to full length use short strokes only.

9. Always ensure that all nuts and screws are tight.

10. Always ensure gear mesh is correct.

11. Run in a new engine by using a rich fuel mixture, to ensure plenty of lubrication, and use no more than half throttle for the first 2 or 3 tanks of fuel.

12. Running tyres with a larger diameter of those supplied with the kit will over-gear the car. This will cause excessive loads and thus un-due wear and tear.

13. Superglue the tyres to the wheels.

14. This product is not a toy. It is a hobby product capable of high performance, but will require regular maintenance. Learn to drive the car slowly at first, away from solid objects. The Rascal is capable of Small jumps and stunts, but heavy impact can cause damage.

GUARANTEE:
All parts are guaranteed against defect in manufacture. Conditions of use of this product are out of our control and therefore we cannot guarantee parts against failure in use. This is an ultra high performance car, if used without due respect failure could occur. If you have any problems with this product your first point of contact should be the place of purchase.

Nitro Accessories



H1016 ~ 250cc Fuel Bottle
H1017 ~ 500cc Fuel Bottle
Both bottles feature a blue alloy pipe and include a stopper.



H1030 ~ Nitro Cleaner
Ideal for cars and engines. Just Spray, and wipe off!



G837 ~ Mini Temp Gun
Ideal for measuring tyre, track and head temperature.



H1033 -
Micro Waterproof Failsafe





G69000 ~ Glow Plug



H1018 ~ 5 Way Glow Plug Spanner
Chrome Plated Plug Spanner 7mm, 8mm, 10mm, 12mm and 17mm across flats.



H1009 ~ Curved Scissors
Designed for cutting out polycarbonate bodies.



U2851 ~Purple Alloy Fuel Filter
Complete with Sintered Brass Filter.



U1552 ~ Silver Body Clips
H1010 ~ "Fluro" Yellow Body Clips
H1011 ~ "Fluro" Green Body Clips
H1012 ~ "Fluro" Red Body Clips
H1013 ~ "Metallic" Red Body Clips
H1014 ~ "Metallic" Blue Body Clips
H1015 ~ "Metallic" Purple Body Clips
All body clips come in packs of ten.

H1023 ~ "D" Cell Glow Starter
Easy to use. Requires a "D" cell battery.





H1038 ~ Piper X Air Filter Cleaner
Use this to clean your air filter, before adding air filter oil.

G020 ~ 20 weight (thin)
G025 ~ 25 weight
G030 ~ 30 weight
G035 ~ 35 weight
G040 ~ 40 weight
G045 ~ 45 weight
G050 ~ 50 weight
G055 ~ 55 weight
G060 ~ 60 weight
G070 ~ 70 weight
G080 ~ 80 weight
G100 ~ 100 weight
G120 ~ 120 weight (thick)
The best silicone shock oil you can buy!





H1037 ~ Piper X Air Filter Oil
Add this to your air filter after cleaning. A must for dusty conditions.



H1025 ~ 4 Way Glow Plug Spanner
Chrome Plated Plug Spanner 7mm, 8mm, 10mm, and 12mm across flats.



G200 ~The Ultimate Lube!

Schumacher
Distributed By:
SCHUMACHER RACING PRODUCTS Ltd.
71 - 73 Tenter Road ~ Moulton Park
Northampton ~ NN3 6AX ~ U.K.
Phone: 01604 790770 ~ Fax: 01604 790209
www.racing-cars.com