Riot

Instruction Manual v 1.0



Schumacher Racing
71-73 Tenter Road
Moulton Park
Northampton
NN3 5AX
ENGLAND

www.racing-cars.com

Schumacher USA Inc
6302 Benjamin Road
Suite 404
Tampa
Florida 33634
U.S.A

S1136

Radio Gear



G829 Transmitter



G631 Receiver



G833 Servo (Standard)
G851 Servo (Metal Gears)



Rechargable Glow Starter
G853 UK (240V)
G855 USA (110V)

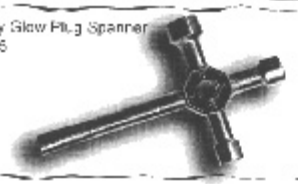

4 Way Glow Plug Spanner
H1025

ADDITIONAL ITEMS REQUIRED (NOT SUPPLIED)



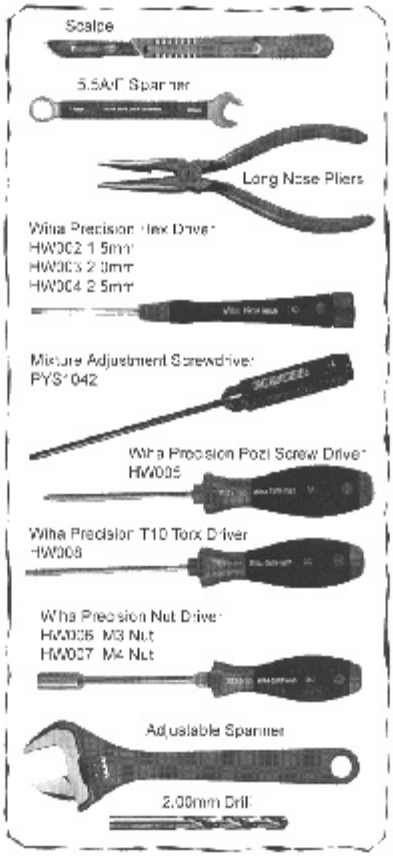





Do not use excessive force when tightening the self-tapping screws, or you may strip the thread in the plastic. It is recommended to stop tightening it when the threaded part of the screw goes into the plastic part and you feel some resistance from the tightening. Screws can be made easier to tighten if a drop of oil is used.



Good

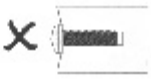

overtightening the screws may strip the threads in the plastic mouldings

GUARANTEE

All parts are guaranteed against defect in manufacture. Conditions of use of this product are out of our control and therefore we cannot guarantee parts against failure in use. This is an ultra high performance car, if used without due respect failure could occur.

If you have any problems with this product your first point of contact should be the Store where you Purchased it From.

www.racing-cars.com

In line with our policy of continuous development the exact details of the kit may vary

BEFORE STARTING TO INSTALL THE RADIO GEAR, CONNECT UP SERVOS, BATTERY, SWITCH AND RECEIVER. SET TRIMS ON THE TRANSMITTER TO NEUTRAL AND TURN THE RADIO AND CAR ON. TEST BOTH SERVOS WORK.
TURN THE SWITCH OFF BEFORE THE TRANSMITTER AS THIS WILL LEAVE THE SERVOS IN THEIR NEUTRAL POSITIONS.

Riot

Radio Installation

1

CHOOSE THE CORRECT HORN FOR YOUR SERVO.
SA = SANWA/AIRTRONICS
FU = FUTABA
SH = SCHUMACHER/HITEC

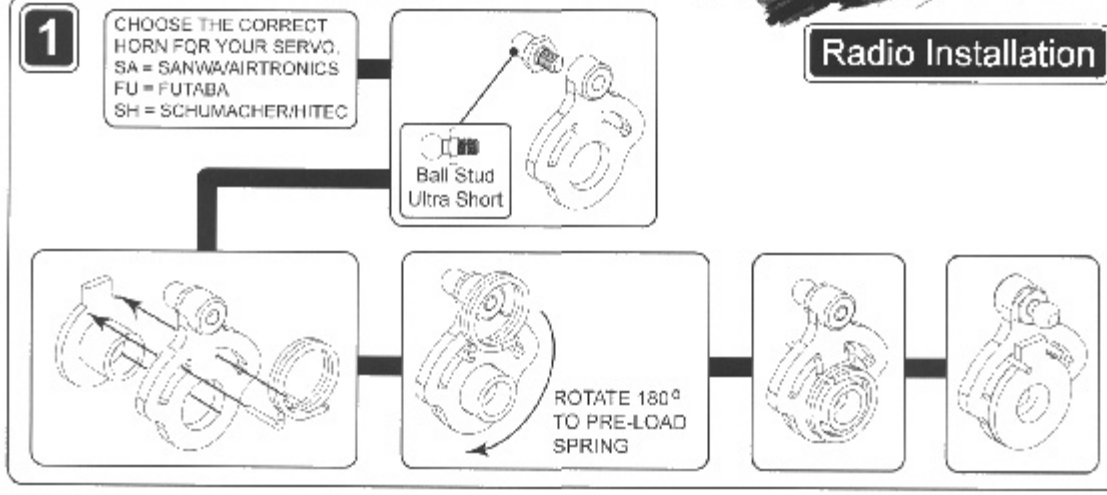

2

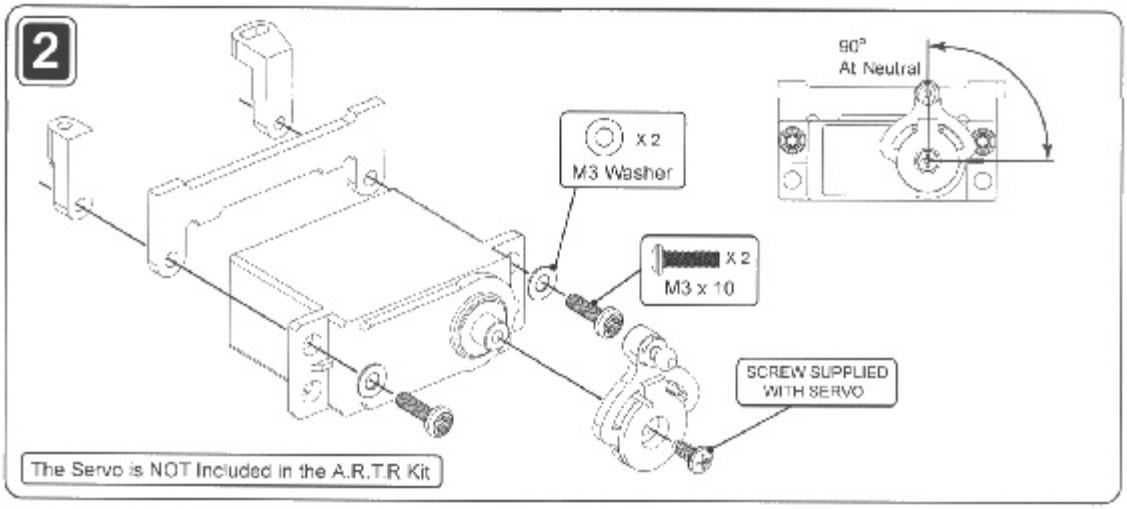

The Servo is NOT Included in the A.R.T.R Kit

3

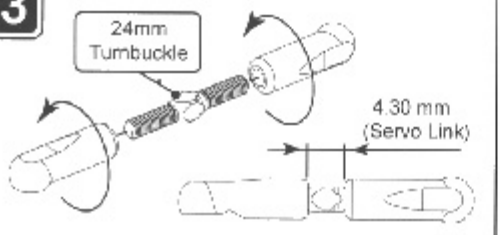

4

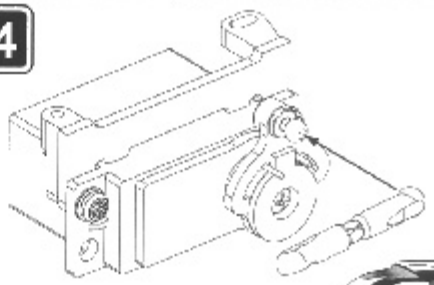

Schumacher

www.racing-cars.com

Riot

Radio Installation cont...

5

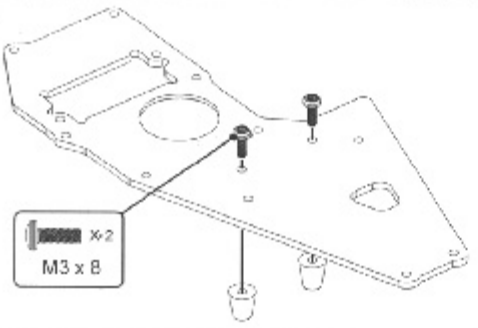

6

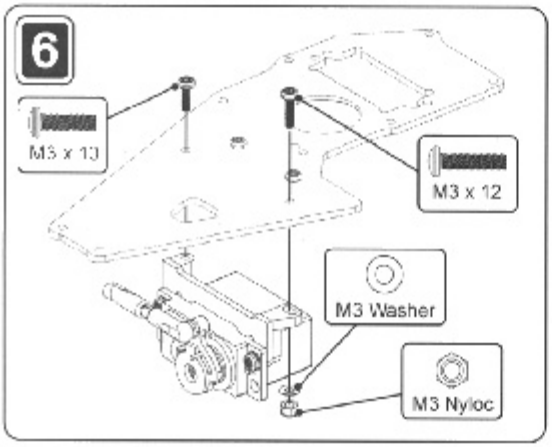

7

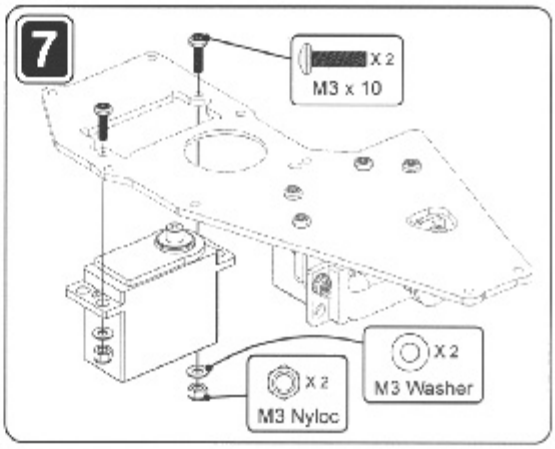

8

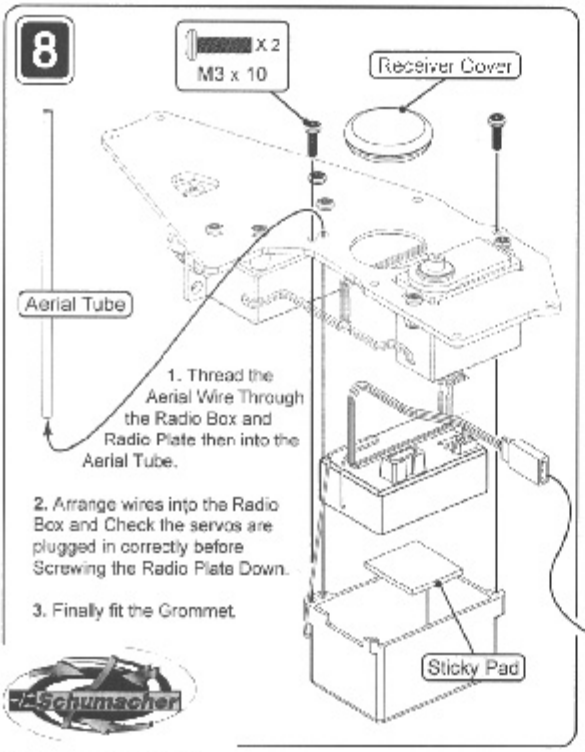

9

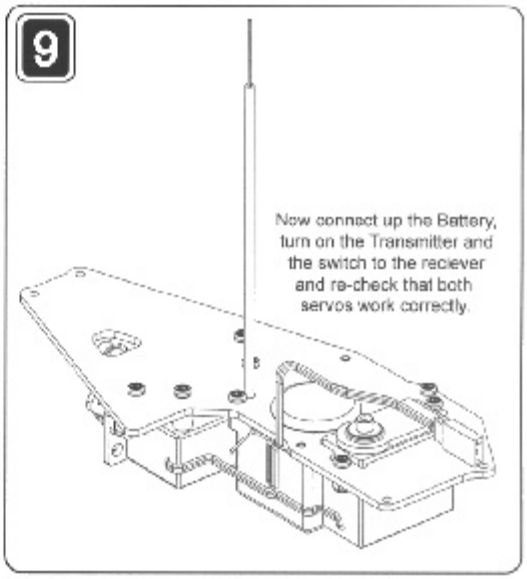

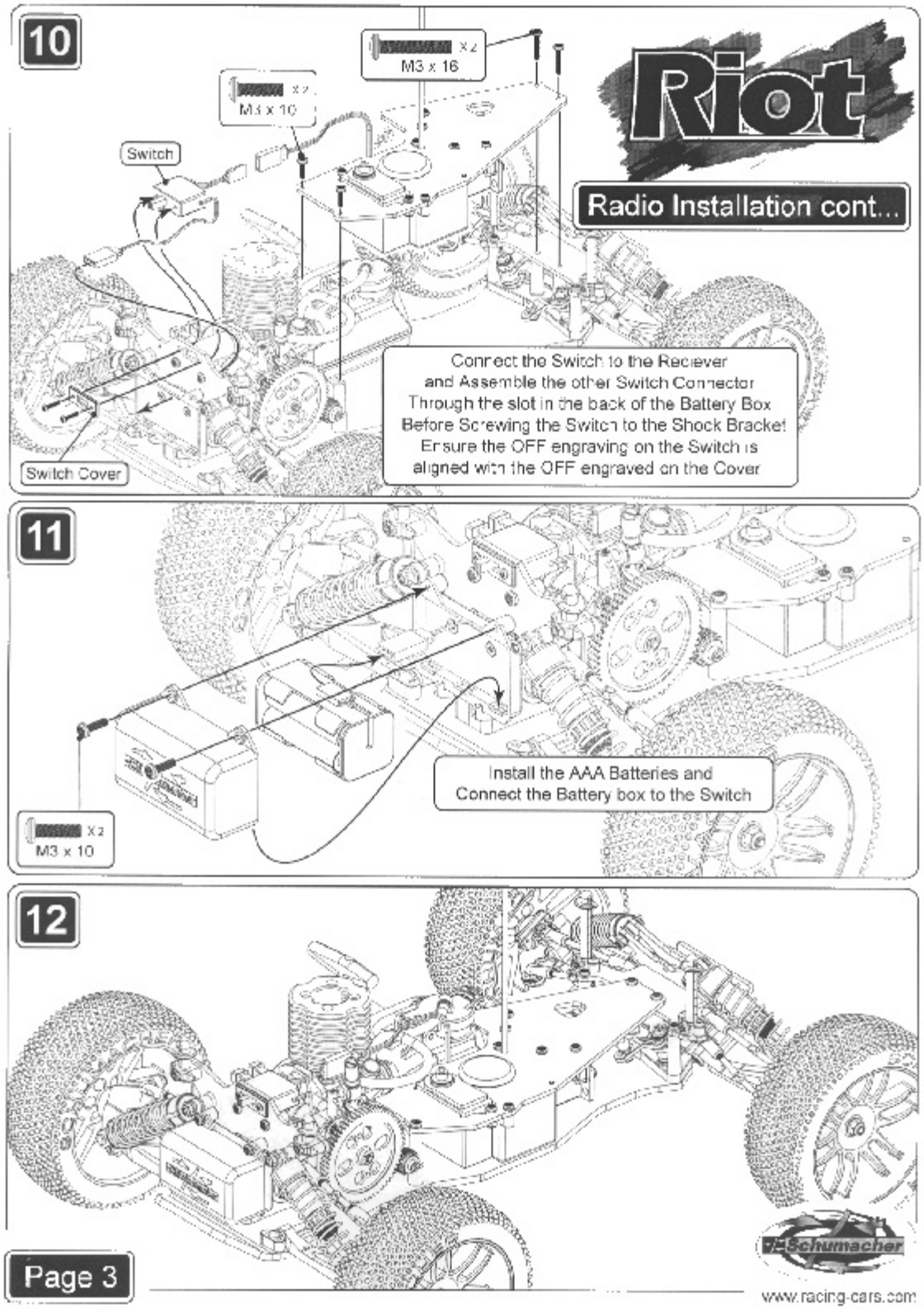
10
Riot
Radio Installation cont...
X 2
M3 x 16
X 2
M3 x 10
Switch
Switch Cover
Connect the Switch to the Reciever
and Assemble the other Switch Connector
Through the slot in the back of the Battery Box
Before Screwing the Switch to the Shock Bracket
Ensure the OFF engraving on the Switch is
aligned with the OFF engraved on the Cover
11
Install the AAA Batteries and
Connect the Battery box to the Switch
X 2
M3 x 10
12
Schumacher
www.racing-cars.com

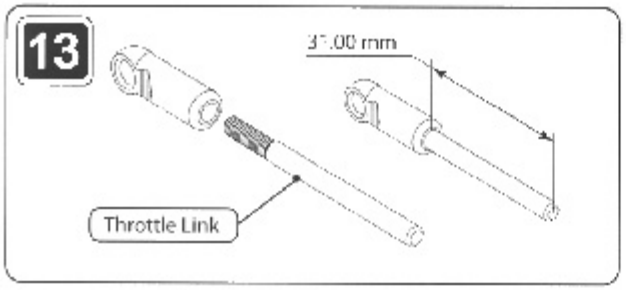

Riot

Radio Installation cont...



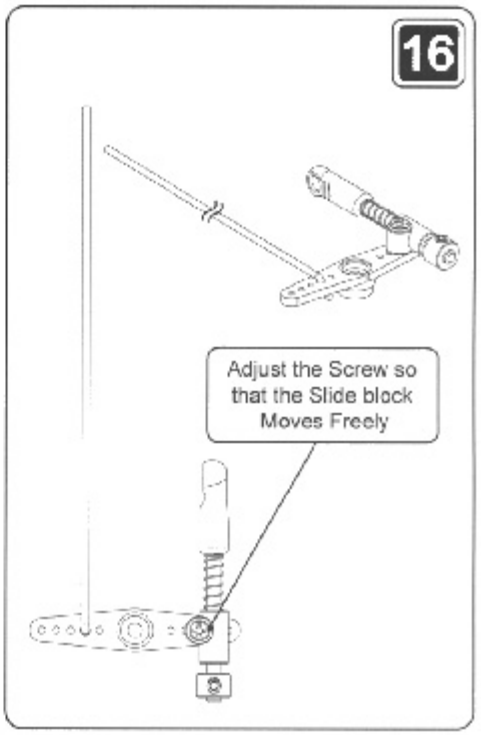

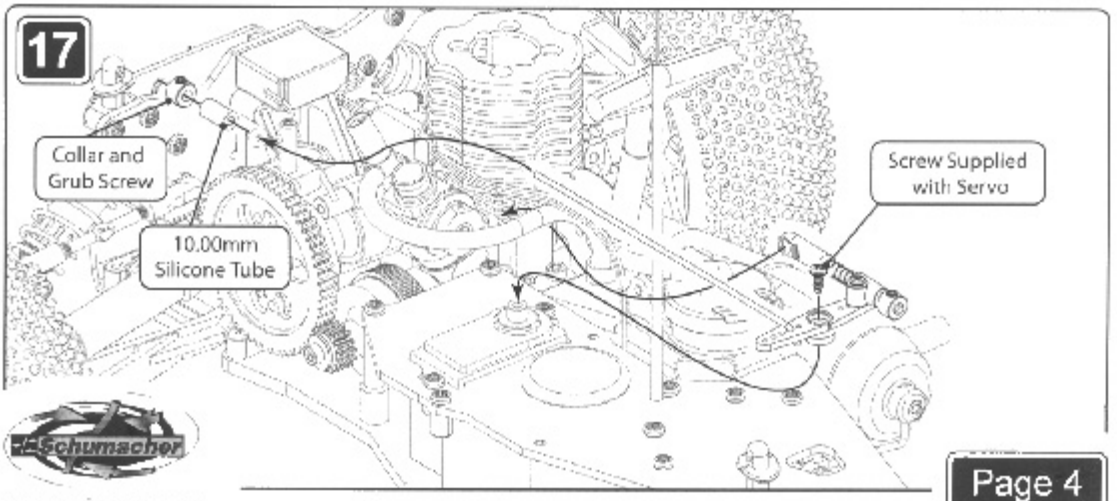

Schumacher

www.racing-cars.com

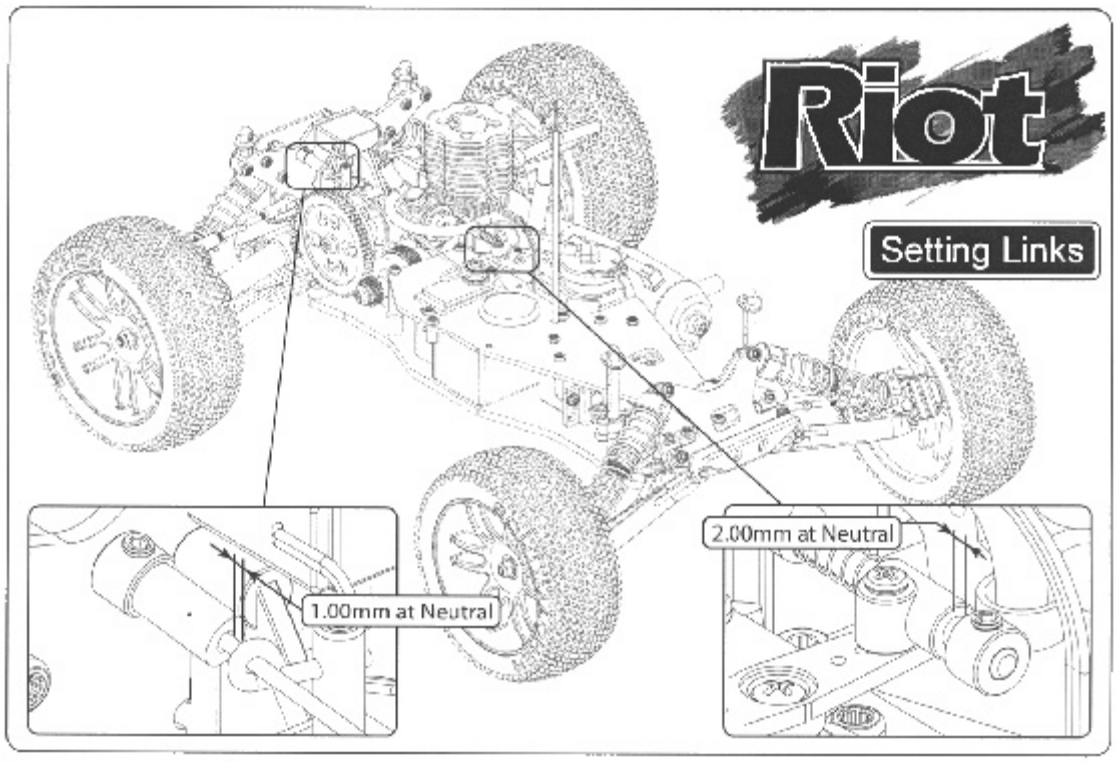
Riot
Setting Links
1.00mm at Neutral
2.00mm at Neutral

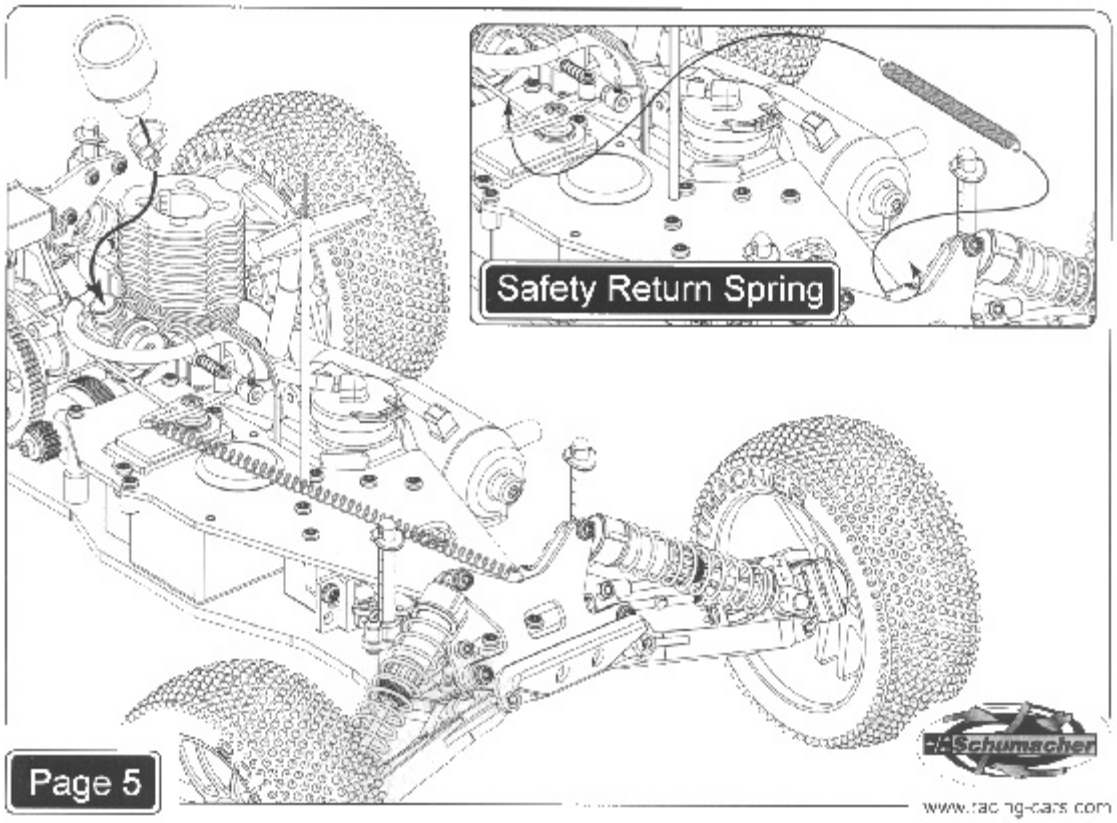
Safety Return Spring
Schumacher

Fill Fuel Tank

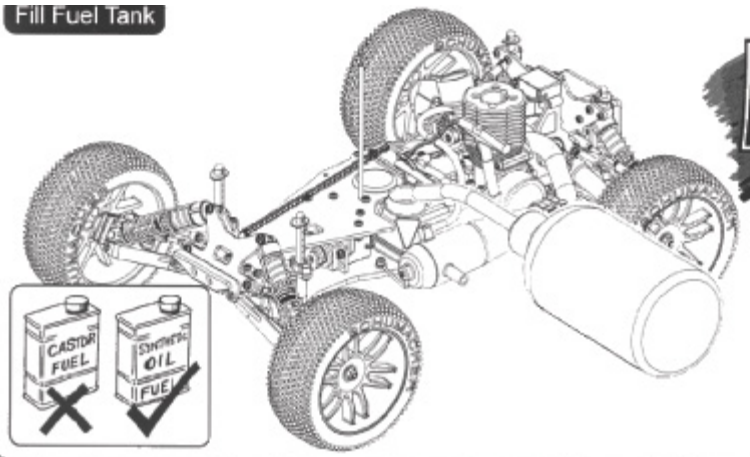

Riot

Starting Engine

We Strongly Recommend Model Technics Dynaglow, Jets, Blue Thunder. Magnum or O'Donnel 16-25% Fuels

Priming Engine

Ensure Batteries are Fully Charged. Turn on Transmitter. Switch on Receiver.

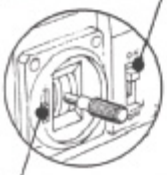

Ensure Throttle Trim is at Neutral
Check Throttle, Brake and Steering Action

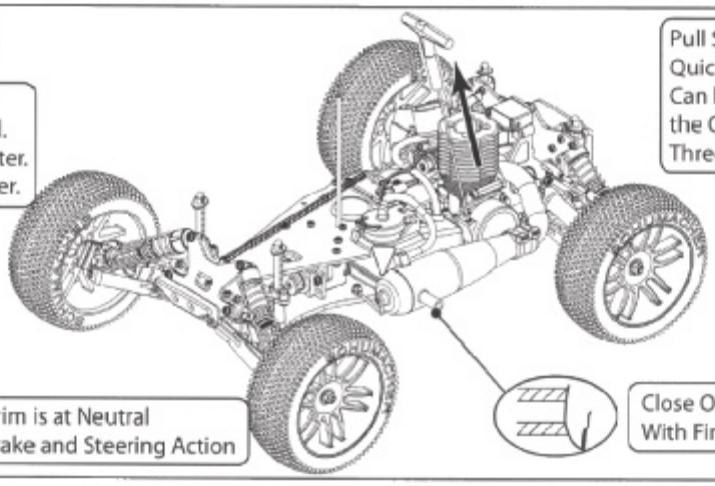

Pull Starter in Short, Quick Bursts Until Fuel Can be Seen Entering the Carburettor then Three more Pulls.

Close Off Exhaust With Finger.

Starting Engine

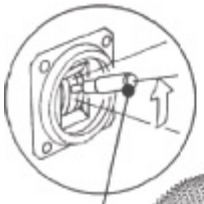

Pull Starter in Short, Quick Bursts Until the Engine Starts.

Gently Rev the Engine Then Remove the Glow Start

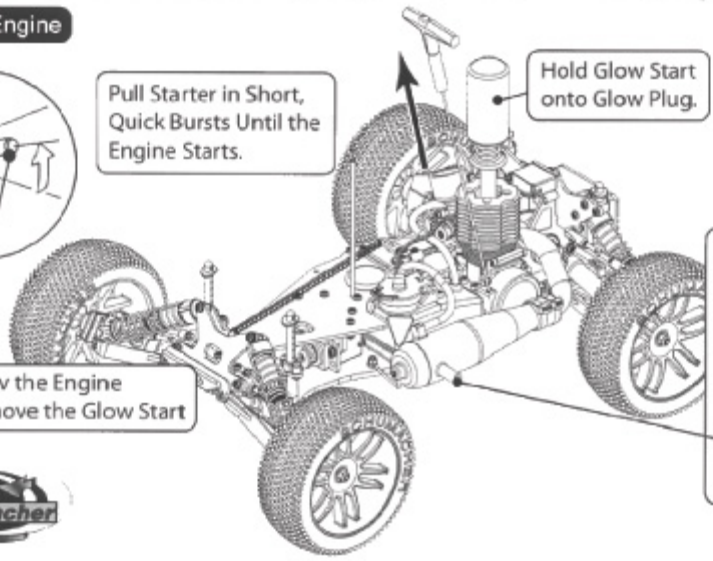

Hold Glow Start onto Glow Plug.

WARNING

After Running The Engine and Silencer will be VERY HOT do not Touch for Several Minutes

Stopping Engine

Stop Engine By Blocking the Exhaust.
Ensure Engine is at Idle Before Stopping.



DO NOT ALLOW THE NOISE TO ANNOY OTHERS
DO NOT OPERATE THE "CAR" ON THE PUBLIC HIGHWAY
DO NOT OPERATE THE "CAR" IN A CONFINED SPACE OR CROWDED AREA
DO NOT RUN ENGINE WITHOUT AIR FILTER - SERIOUS DAMAGE WILL RESULT
DO NOT ALLOW THE TRANSMITTER OR RECEIVER BATTERIES TO RUN FLAT



Trouble Shooting

RUNNING ENGINE IN FROM NEW

To ensure your engine has a long life the engine needs to be "run in" before being "raced". Run the car for 2 or 3 tank fulls, at a rich Carb setting on half throttle, do not use full throttle

AFTER RUNNING IN

After "running in" is complete, and you have re-tuned the high and low end mixture screws for maximum power, you may need to reset the idle speed to prevent the car from "creeping" forward at neutral.

This must be done with the IDLE SPEED SCREW on the carburettor NOT with the throttle trim on the radio, which will only apply the brakes and this may leave the clutch dragging and lead to over-heating.

The following information will help solve any problems when running and maintaining your car

PROBLEM	CAUSE	REMEDY
ENGINE DOES NOT START	FUEL TANK EMPTY, ENGINE NOT PRIMED FLAT GLOW BATTERY OR DEAD GLOW PLUG CLOGGED AIR FILTER OVER PRIMED, CYLINDER FLOODED WITH FUEL INCORRECT CARBURETTOR ADJUSTMENT INCORRECT LINKAGE ADJUSTMENT WORN ENGINE - PISTON LINER	FILL TANK AND REPRIME ENGINE RECHARGE BATTERY AND/OR REPLACE PLUG CLEAN OR REPLACE AIR FILTER REMOVE GLOW PLUG THEN TURN ENGINE OVER TO DISCHARGE FUEL CHECK SETTINGS RE ADJUST LINKS WITH SERVO IN NEUTRAL REPLACE PISTON LINER
ENGINE STALLS	FUEL TANK EMPTY CLOGGED AIR FILTER INCORRECT CARBURETTOR ADJUSTMENT ENGINE OVER HEATING	FILL FUEL TANK CLEAN OR REPLACE AIR FILTER RE ADJUST CARBURETTOR SETTINGS ALLOW ENGINE TO COOL DOWN AND OPEN HIGH SPEED MIXTURE SCREW 90°
POOR ENGINE RESPONSE	INCORRECT CARBURETTOR ADJUSTMENTS FUEL TANK PRESSURE PIPE LOOSE, DETACHED OR DAMAGED OR BLOCKED WORN ENGINE - PISTON LINER	RE ADJUST CARBURETTOR SETTINGS REPLACE OR REFIT PRESSURE PIPE REPLACE PISTON LINER
POOR CAR CONTROL	WEAK BATTERIES IN TRANSMITTER WEAK RECEIVER BATTERIES TRANSMITTER AERIAL NOT FULLY EXTENDED POOR ADJUSTMENT OF LINKS	RECHARGE OR REPLACE BATTERIES RECHARGE OR REPLACE BATTERIES EXTEND AERIAL RE-ADJUST LINK TO INSTRUCTIONS

IMPORTANT - REGULAR MAINTENANCE

Check differential adjustment, check all screws are tight, check gear mesh adjustment.
Oil bearings and keep car clean.

RJ Schumacher
www.racing-cars.com

SETTINGS GIVEN ARE FOR A STARTING POINT ONLY.
SMALL ADJUSTMENTS MAY BE REQUIRED

Riot

IDLE SPEED SETTING



ENGINE STALLS = SCREW THROTTLE STOP SCREW CLOCKWISE TO INCREASE REVS



CAR DOES NOT MOVE AND SOME SMOKE = OK



CAR EDGES FORWARD = SCREW THROTTLE STOP SCREW ANTI-CLOCKWISE TO LOWER REVS

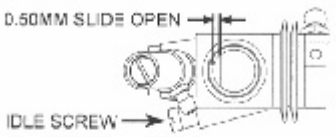

SET IDLE SPEED AS HIGH AS POSSIBLE WITHOUT THE CAR EDGING FORWARD

LOW SPEED MIXTURE SETTING



TOO MUCH SMOKE AND SLOW ACCELERATION (TOO RICH) SCREW LOW SPEED MIXTURE SCREW CLOCKWISE



SOME SMOKE AND GOOD ACCELERATION = OK



CAR EDGES FORWARD THEN STALLS (TOO LEAN) SCREW LOW SPEED MIXTURE SCREW ANTI-CLOCKWISE

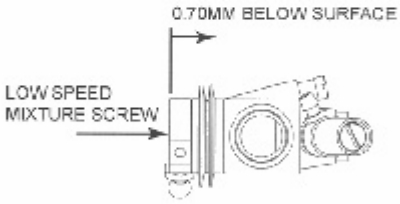

HIGH SPEED MIXTURE SETTING



2½ TURNS OPEN (ANTI-CLOCKWISE) FROM FULLY CLOSED

TOO MUCH SMOKE AND SLOW SPEED (TOO RICH) SCREW HIGH SPEED MIXTURE SCREW CLOCKWISE



SOME SMOKE AND GOOD SPEED = OK



TOO LITTLE SMOKE AND SLOW SPEED (TOO LEAN)
SCREW HIGH SPEED MIXTURE SCREW ANTI-CLOCKWISE

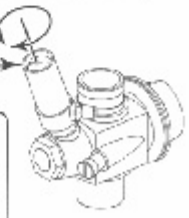

IF THE CAR BEGINS TO LOSE PERFORMANCE AFTER A FEW MINUTES IT IS PROBABLY OVERHEATING (TOO LEAN). YOU MUST STOP AND SCREW THE HIGH SPEED MIXTURE SCREW 1/4 TURN ANTI-CLOCKWISE

Riot

Differential

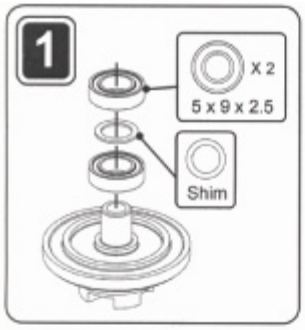

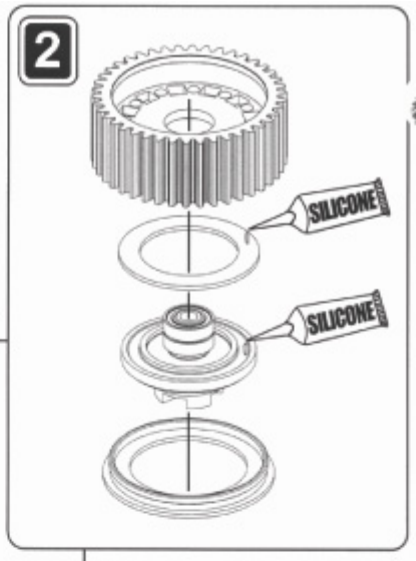

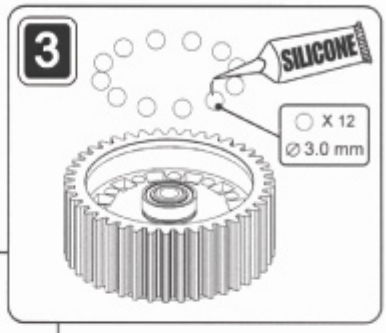

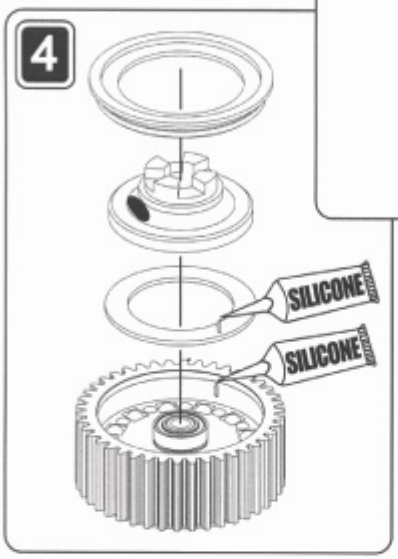

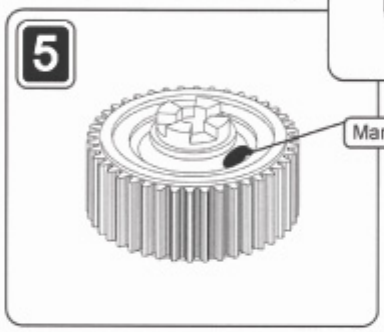

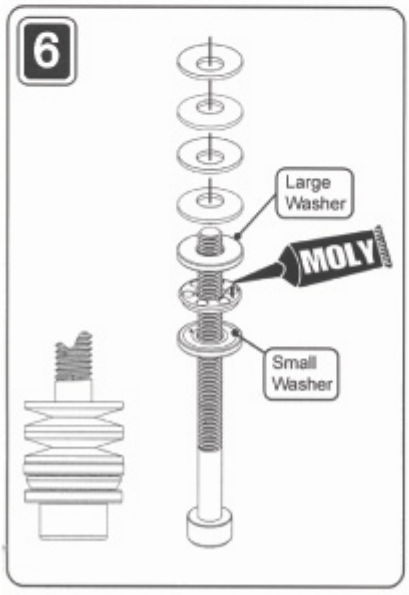

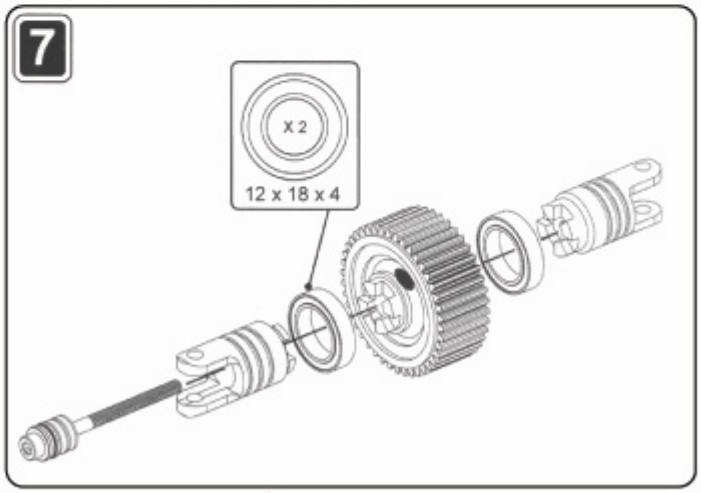

Schumacher
www.racing-cars.com

Riot

Differential cont...

8

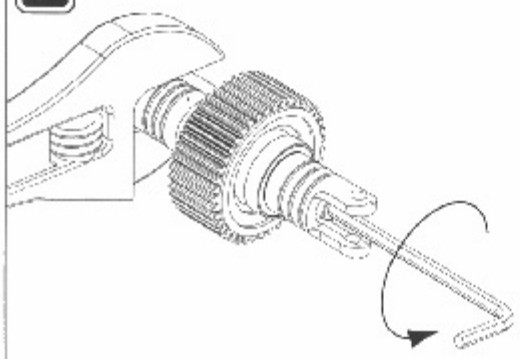

9

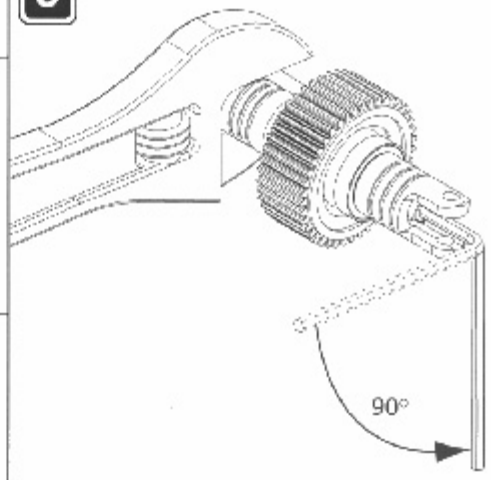

DIFF ADJUSTMENT

8 - TIGHTEN ALLEN KEY UNTIL THE DISC SPRINGS ARE FLAT
9 - THEN UNDO 90 DEGREE'S
10 - LOCK THE SETTING TIGHTLY WITH THE GRUB SCREW

10

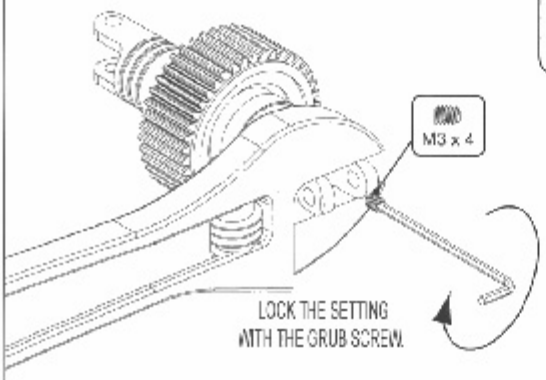

11

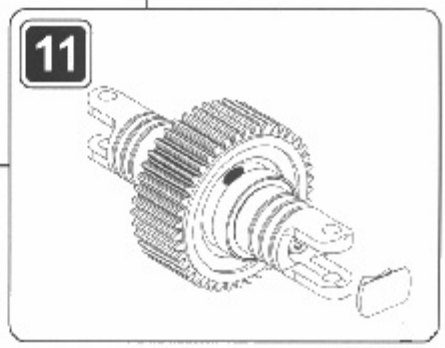

Riot

Shock Absorber

1

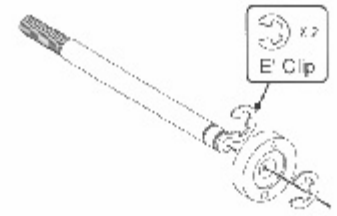

2

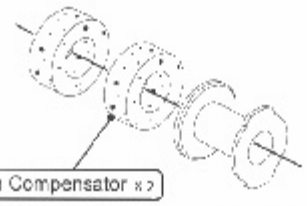

3

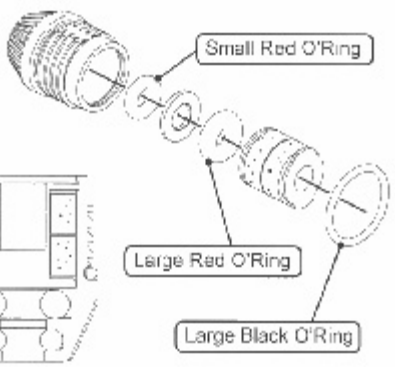

4

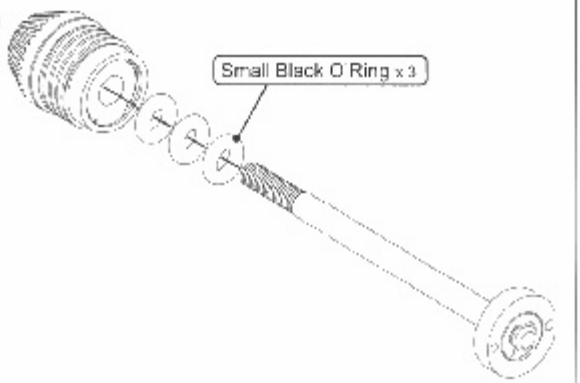

5

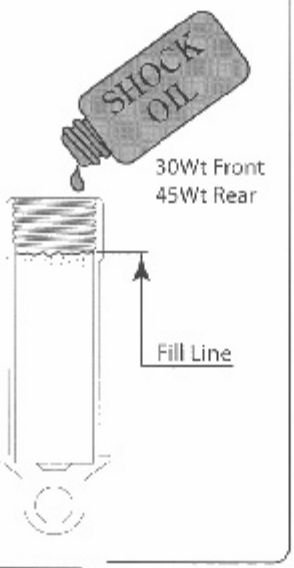

6

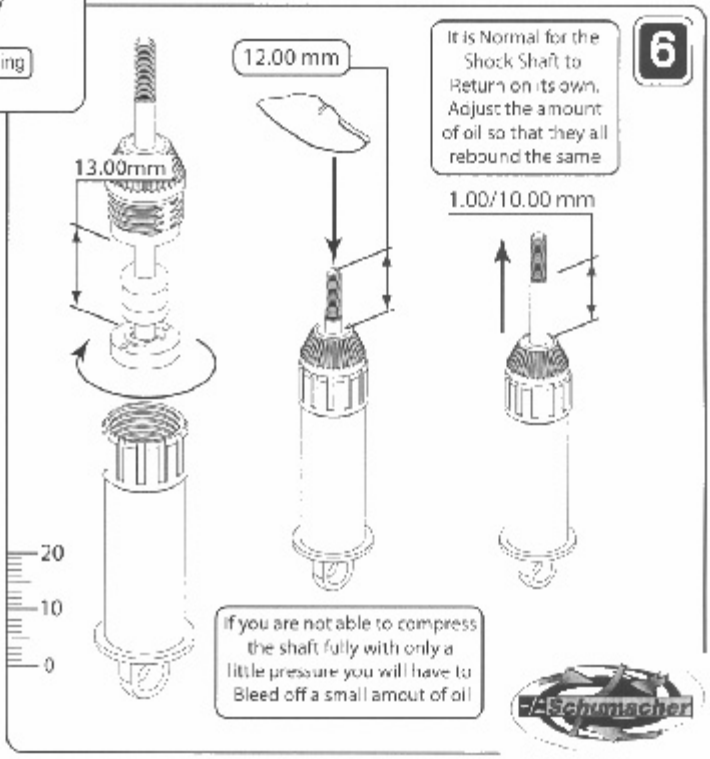

Schumacher

www.racing-cars.com

7

Grip the Piston Rod to Form a Dent
Be careful Not to Damage the polished
Rod Beyond 2.0mm from the Thread
Screw the Rod End onto the Shaft
until No more Thread is Showing, But no More.

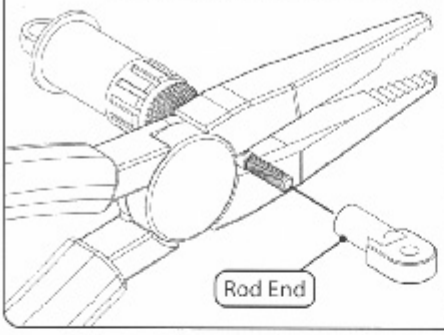

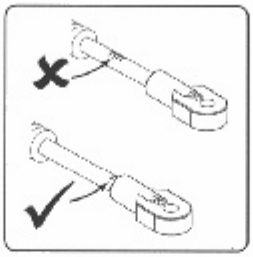

Riot

Shock Absorber cont...

8

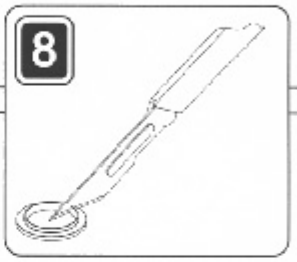

9

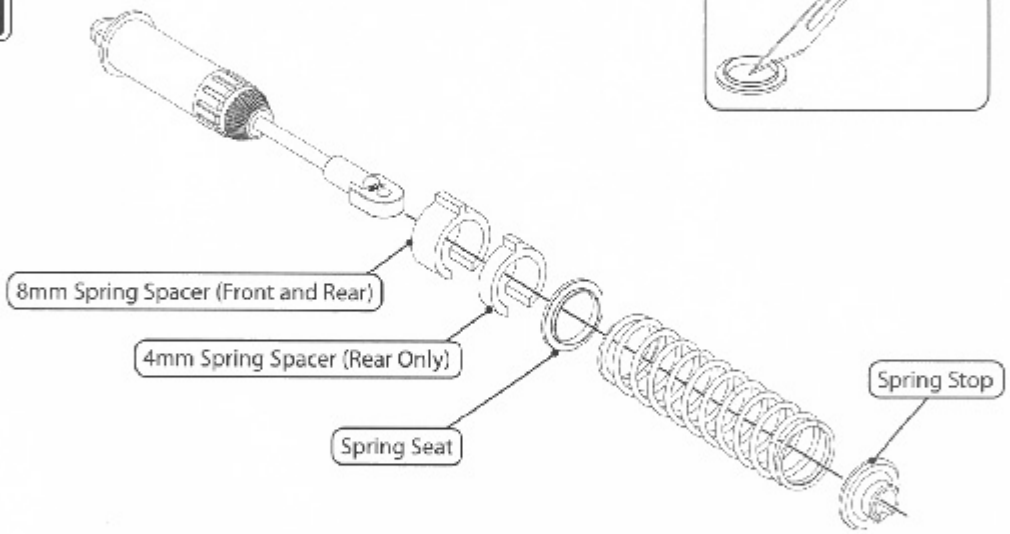

10

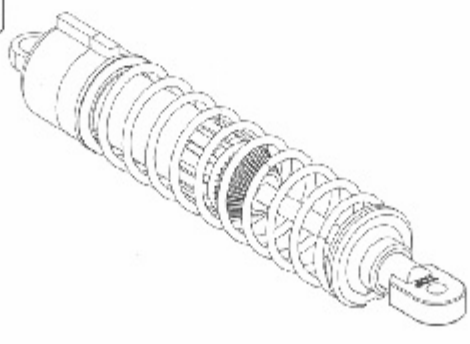

X18 Engine Breakdown

Riot

www.racing-cars.com

SCHUMACHER X18 PERFORMANCE ENGINE

G89998 Complete Engine

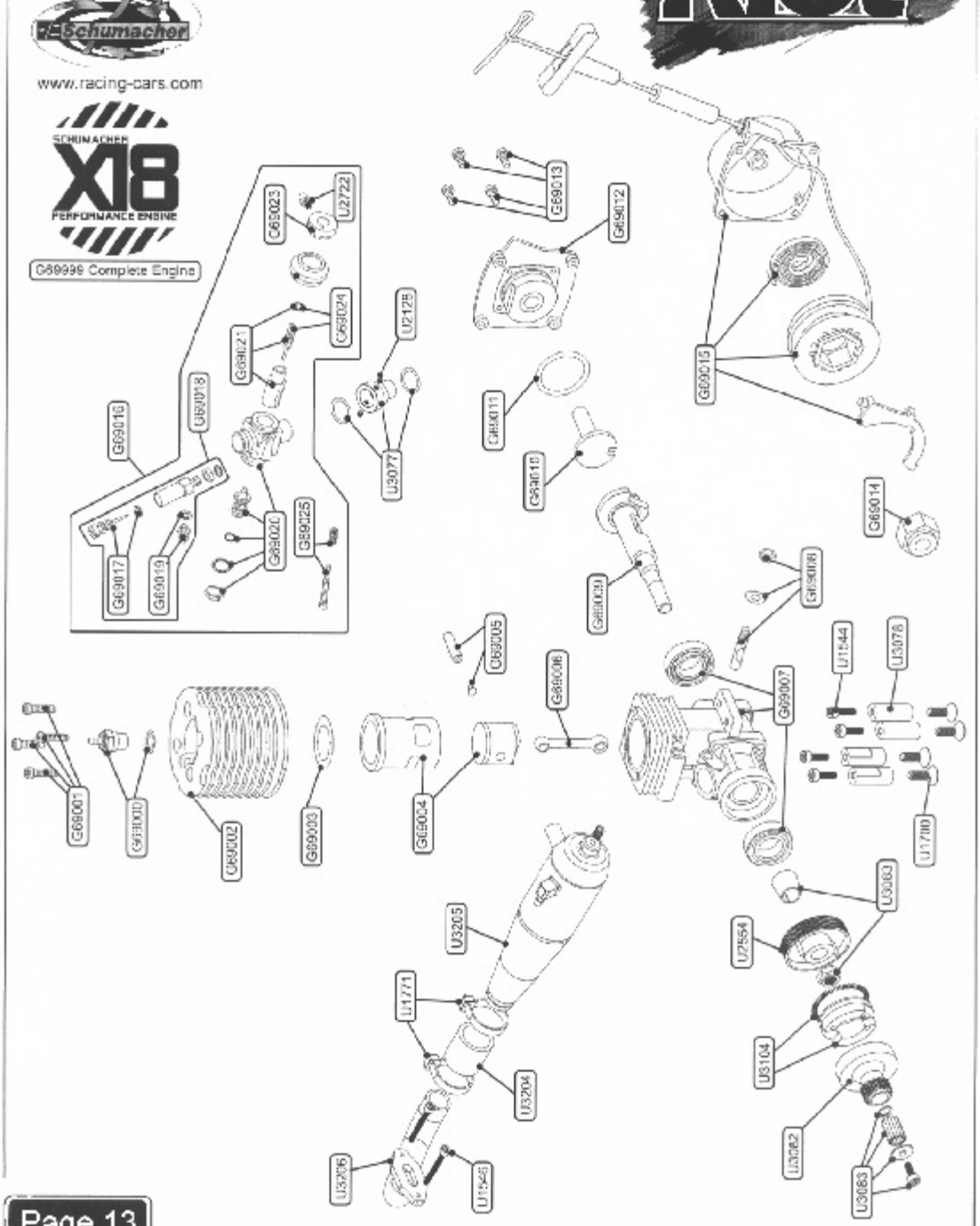

Riot

Speed Secrets



Purple Alloy Air Filter
U3245
Dual Stage Foam

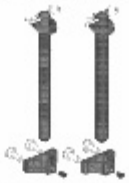

Rear Purple Alloy Body Mounts with Flex Post
U2165



Front Purple Alloy Body Mounts with Flex Post
U2166



Purple Alloy Pivot Blocks
U3215



Alloy Shock Bodies (Pr)
U2850

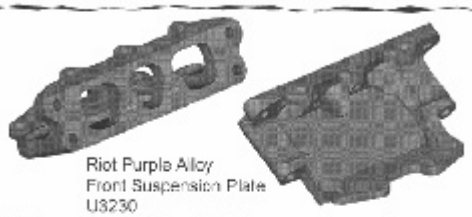

Riot Purple Alloy
Front Suspension Plate
U3230

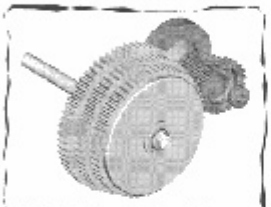

3 Speed Conversion Set
U3217



Alloy Rachet & Brake Hub
U2780



1/8th Wheel
Conversion Set (Pr)
U3216



Shock Spring Set
(5 Pairs)
U1353



Purple Alloy Shock Seal Housings (Pr)
U1815



Purple Titanium
Turnbuckles (Pairs)
U1572 (39mm)
U1573 (53mm)
U1574 (60mm)
U2053 (25mm)
U2566 (45mm)

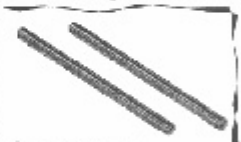

Purple Titanium
Pivot Pins (Prs)
U1575 (25mm)
U1579 (44mm)
U1905 (53mm)

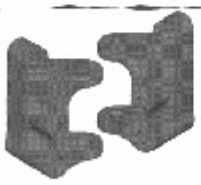

Purple Alloy Yokes
U3091



Purple Alloy Rear
Hub Carriers (Pr)
U3092



Purple Alloy Front Hubs
U3090



Purple Alloy Front Axles (pr)
U3231

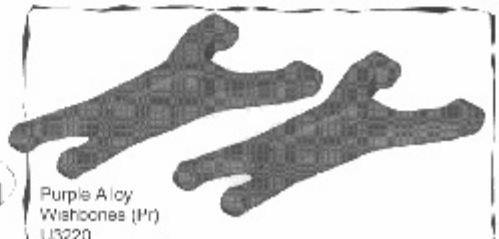

Purple Alloy
Wishbones (Pr)
U3220



Alloy Rear Axles (pr)
Hard Anodised
U3232

Riot

Speed Secrets



"D" Cell Glow Starter
H1023
Easy to use, requires "C718" "D" cell battery



Silicone Coupler
12 Engines
RS123



Fuel Tube (50 cm)
U1119



Purple Alloy Fuel Filter
U2851
With "Sintered Brass Filter.



Nitro Failsafe (Micro)
H1033



ZX1 ExtraLube
G200
The Ultimate Friction Eliminator



Glow Plug
Schumacher X18
G66000



U1552 – Silver Body Clips
H1010 – "Fluro" Yellow Body Clips
H1011 – "Fluro" Green Body Clips
H1012 – "Fluro" Red Body Clips
H1013 – "Metallic" Red Body Clips
H1014 – "Metallic" Blue Body Clips
H1015 – "Metallic" Purple Body Clips

All body clips come in packs of ten

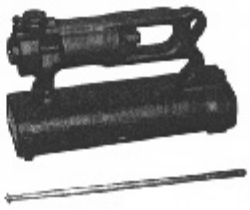

Pocket Start 2
G867



Back Plate
Schumacher X18
Pocket Start
G858



Nitro Starter Set
UK (240V) G852
USA (110V) G854



Temp Gun for Accurate Head Temperature Measurement
G837



5 Way Glow Plug Spanner
H1018
7mm, 8mm, 10mm, 12mm and 17mm across flats.



Piper X Air Filter Oil
H1037

Piper X Air Filter Cleaner
H1038



Ultimate Racing
After Run Oil
UR0003



Nitro Cleaner 500ml
H1030

Bearing Blaster 500ml
H1031



250cc Fuel Bottle
H1016
Blue Alloy pipe with stopper!

www.racing-cars.com

K067 RIOT 1-10 Nitro Truck; A-RTR-Green
K068 RIOT 1-10 Nitro Truck; A-RTR-Yellow
K069 RIOT 1-10 Nitro Truck; A-RTR-Blue
K070 RIOT 1-10 Nitro Truck; RTR-Green
K071 RIOT 1-10 Nitro Truck; RTR-Yellow
K072 RIOT 1-10 Nitro Truck; RTR-Blue

CHASSIS PARTS

U119 Aerial Tube - Pack 4
U2154 Lite Body Post Set; 2 vert 2 horiz
U3048 Chassis Post - Rascal (pr)
U3049 Battery Box - Rascal
U3051 Moulding Set - Rascal
U3052 Radio Box - Rascal
U3101 Grommet - 25mm (pk3)
U3173 Instruction Manual - RIOT
U3197 CNC Alloy Chassis - RIOT
U3202 Radio Plate - RIOT
U3208 Servo Mount Accessories - RIOT

BODYSHELLS & DECALS

U5090 Body & Decal; RTR - Green - RIOT
U5091 Body & Decal; RTR - Yellow - RIOT
U5092 Body & Decal; RTR - Blue - RIOT
U5093 Body & Decal; Clear - RIOT

SUSPENSION

U1425 Pivot Pin; Grooved 1-8 x 44mm
U1440 Pro Pivot Pin; grooved 25mm x 1/8 (pr)
U1704 Ball Grippa Sockets (pk 8)
U2662 Pivot Pin; plain 53mm x 1/8
U2722 Ball Grippa Joints - U/Sh Stud 4prs
U2882 Servo Saver Set; Light & Heavy Springs
U3054 Bush; shock mount - Rascal (pr)
U3057 Hub Carrier; Rear - Rascal (pr)
U3058 "Pivot Pin, grooved 35mm x 1/8
U3059 Rose Joint Screw - Rascal (pk 4
U3060 Rose Joint Socket - Rascal (pk 4)
U3064 Steering Moulding Set - Rascal
U3067 Yoke C Hub - Rascal (pr)
U3103 Pivot Pin; grooved 23mm x 1/8 (pr)
U3186 Wishbones; Fr & Rr - RIOT (pr)
U3187 Pivot Blocks; Rear Two Screw (pr)
U3188 Bottom Plate - RIOT
U3189 Bulkhead - RIOT
U3190 Front Hub Mouldings - RIOT (pr)
U3191 Moulded Front Bumper - RIOT
U3192 Steering Posts and Screws - RIOT
U3198 Body Mount; Front - RIOT
U3199 Front Link Bracket - RIOT
U3200 Shock Bracket; Front - RIOT
U3201 Front Strap - RIOT
U3203 Shock Bracket; Rear - RIOT
U3209 Turnbuckle Adjuster; Gold - 24mm (pr)
U3211 Turnbuckle Adjuster; Gold - 39mm (pr)
U3212 Turnbuckle Adjuster; Gold - 45mm (pr)
U3213 Turnbuckle Adjuster; Gold - 53mm (pr)
U3214 Turnbuckle Adjuster; Gold - 60mm (pr)
U750 Ball Grippa Joints-Short Stud 8prs
U851 Ball Grippa Joints - Long Stud 8prs

TRANSMISSION

U1635 Disc Brake Cam - Nitro 10/2000
U1636 Disc Brake Repair Set - Nitro
U1832 Idler Gear Shaft - RASCAL
U2333 Universal Joints Bag (pr)
U3071 Gear Set - Rascal
U3072 Layshaft - Rascal
U3073 Transmission Housings - Rascal
U3175 Assembled Diff - Riot
U3176 Diff Output; Threaded - RIOT
U3177 Diff Output; Thrustrace - RIOT
U3178 Diff Repair Kit - RIOT
U3179 Washer Carrier; Male - RIOT
U3180 Washer Carrier; Female - RIOT
U3181 Spur Gear; 65T 32DP - RIOT
U3182 Driveshaft Assembled - RIOT (pr)
U3183 Driveshaft Mouldings - RIOT (pr)

SPRINGS

U1353 Spring Tuning Set; Long (5prs)
U3195 Spring; Gold R4 - RIOT (pr)
U3196 Spring; Gold R6 - RIOT (pr)

Schumacher
www.racing-cars.com

SHOCK OIL

G020 Pure Silicone Shock Oil - 20w
G025 Pure Silicone Shock Oil - 25w
G030 Pure Silicone Shock Oil - 30w
G035 Pure Silicone Shock Oil - 35w
G040 Pure Silicone Shock Oil - 40w
G045 Pure Silicone Shock Oil - 45w
G050 Pure Silicone Shock Oil - 50w
G055 Pure Silicone Shock Oil - 55w
G060 Pure Silicone Shock Oil - 60w
G070 Pure Silicone Shock Oil - 70w
G080 Pure Silicone Shock Oil - 80w
G100 Pure Silicone Shock Oil - 100w
G120 Pure Silicone Shock Oil - 120w

SHOCK ABSORBERS

U1202 Piston Rod - Long Shock (pr)
U1274 Vari Shock Body - Long (pr)
U1310 Shock Mouldings-Vari Click Piston (pr)
U1818 Purple Alloy Shock Seal Housing (pr)
U2143 One Piece Shock Pistons - 4 sets of 3
U2660 Alloy Shock Body; Long Purple (pr)
U3193 Alloy Shocks; Front Assembled - RIOT (pr)
U3194 Alloy Shocks; Rear Assembled - RIOT (pr)
U613 Spring Stop & Spacer Mouldings (pr)
U835 Vari Shock Seal Pack (pr)

BEARINGS & BALLS

U1954 Pro - Thrust Bearing
U2574 Ball Bearing - 5 x 9 x 2.5 (pr)
U2698 Ball Bearing - 5 x 10 x 4 Sealed (pr)
U2699 Ball Bearing - 10 x 15 x 4 Sealed (pr)
U3074 Ball Bearing 12x18x4mm 2RS (pr)
U3075 Ball Bearing 4x8x3mm 2RS - Rascal (pr)
U730 Thrust Bearing

SPEED PACKS

H1010 Body Clips - Flouresecent Yellow (pk10)
H1011 Body Clips - Flouresecent Green (pk10)
H1012 Body Clips - Flouresecent Red (pk10)
H1013 Body Clips - Metallic Red (pk10)
H1014 Body Clips - Metallic Blue (pk10)
H1015 Body Clips - Metallic Purple (pk10)
U1540 SPEED PACK - Short M3 Pan Hd
U1544 SPEED PACK - Short M3; Cap Hd
U1546 SPEED PACK - M3 Cap Hd 25;30;35;45mm
U1547 SPEED PACK - M3 Nuts
U1548 SPEED PACK - M3 Washers
U1549 SPEED PACK - M4 Nuts & Washers
U1551 SPEED PACK - E Clips 2x8pcs
U1552 SPEED PACK - R Clips
U1565 SPEED PACK - Small Self Tap; PanHd
U1633 SPEED PACK - Small Pins (pk)
U1700 SPEED PACK-M4x12 Csk Hi Tensile (4)
U1771 SPEED PACK - Tywraps (pk25)
U1960 SPEED PACK - O Rings; Various
U1962 SPEED PACK - O Rings3.3x2.4ID - pk6
U2128 SPEED PACK - Grub-Set Screws M3 M4
U2135 M4 Nyloc Wheel Nut - Purple Alloy (pk4)
U2344 SPEED PACK-M4 16;20;25;30 Bolts (pk8)
U2590 SPEED PACK - Torx M3 x 10 Csk
U2591 SPEED PACK - Torx M3 x 12 Csk
U2631 SPEED PACK - Circlips Various 12 pcs
U2640 SPEED PACK - Torx M3x6mm Pan Hd
U2641 SPEED PACK - Torx M3x8mm Pan Hd
U2642 SPEED PACK - Torx M3x10mm Pan Hd
U2643 SPEED PACK - Torx M3x12mm Pan Hd
U2644 SPEED PACK - Torx M3x16mm Pan Hd
U2645 SPEED PACK - Torx M3x20mm Pan Hd
U2760 SPEED PACK - M3 Button Hd; 4 to 20
U2940 SPEED PACK - Torx M3x30 Pan Hd
U3168 SPEED PACK - M2.5 Screws pk 10

NITRO POWER PARTS

G857 Roto Start Electric Start
G858 Back Plate; Mini Roto - Sch X18
U2554 Flywheel - 18/21
U2851 Fuel Filter; Purple Alloy+Sintered Filter
U3045 Air Filter; Purple Alloy - 12 to 18 engines
U3076 Battery Holder; 4xAAA
U3077 Carb Extension - Rascal
U3078 Engine Mount Post - Rascal (pk 4)
U3082 Pinion Clutch Bell; 15T - Rascal
U3083 Pinion Service Kit - Rascal
U3084 Radio Switch & Wiring - Rascal
U3102 Fuel Tank - Rascal
U3104 Clutch Shoes & Spring - 18
U3204 Mounting Set; Muffler - RIOT
U3205 Muffler; Polished Alloy - RIOT
U3206 Manifold - RIOT
U3207 Throttle & Brake Link Set - RIOT

NITRO MOTORS & PARTS

G69000 Glow plug - X18
G69001 Screw Cap 2.6 x 12 (4pcs)
G69002 Schumacher 18 CNC Heatsink Head
G69003 Head Shim (1pcs)
G69004 Piston & Sleeve Set - 18
G69005 Wrist Pin & Pad
G69006 Connecting Rod
G69007 Schumacher 18 Crankcase w/Bearings
G69008 Carburetor Retainer Set
G69009 SG Crankshaft for Pull start
G69010 Starter shaft
G69011 O-ring for Back Plate (1pcs)
G69012 Back Plate for Pull Start
G69013 Screw Cap 2.6 x 6 (4pcs)
G69014 One-way bearing
G69015 Pull Start Assembly w/o One-way
G69016 18 Slide Carburetor Assembly
G69017 High speed needle w/Oring
G69018 High speed needle valve set
G69019 Fuel inlet w/Gasket
G69020 18 Slide Carburetor Main body
G69021 Slide rotor set
G69022 Throttle rubber boot (1pcs)
G69023 Throttle linkage guide w/Ball
G69024 Low speed needle
G69025 Adjustment screw w/spring
G69026 Carburetor O-ring & Gasket set
G69027 Cone collet
G69029 Air Filter - X18
G69999 Schumacher 18 PS Engine

1/8 BUGGY WHEELS & TYRES

U3184 Wheel; Chrome - RIOT (pr)
U3185 Wheel; White - RIOT (pr)
U6721 SPIRAL 1-8th Tyre+Insert - Yellow pr
U6723 MINI PIN 1-8th Tyre+Insert - Yellow pr
U6725 MINI PIN 1-8th Tyre+Insert - Silver pr
U6727 VENOM 114 Road Tyre - 1/8 Buggy (pr)

SPEED SECRET - OPTION PARTS

U1572 Titanium Turnbuckle; purple - 39mm (pr)
U1573 Titanium Turnbuckle; purple - 53mm (pr)
U1574 Titanium Turnbuckle - 60mm (pr)
U1576 Titanium Pivot Pin; purple - 25mm (pr)
U1906 Titanium Pivot Pin; purple - 53mm (pr)
U2053 Titanium Turnbuckle; purple - 25mm (pr)
U2165 Alloy Blocks & Flex Body Post - Vertical
U2166 Alloy Blocks & Flex Body Post - Horizontal
U2187 M3 Nyloc Nut - Purple Alloy (pk8)
U2566 Titanium Turnbuckle - 45mm (pr)
U2780 Alloy Ratchet & Brake Hub - 3 Speed
U2810 M4 Nyloc Wheel Nut - Red Alloy (pk4)
U2811 M4 Nyloc Wheel Nut - Blue Alloy (pk4)
U2812 M4 Nyloc Wheel Nut - Black Alloy (pk4)
U2813 M4 Nyloc Wheel Nut - Gold Alloy (pk4)
U3090 Alloy Front Hub Carrier - Rascal
U3091 Alloy Front Yokes - Rascal
U3092 Alloy Rear Hub Carrier - Rascal
U3215 Alloy Pivot Blocks; Rear Two Screw
U3216 1-8th Wheel Conversion - RIOT
U3217 3 Speed Conversion Set - RIOT
U3218 3 Speed Layshaft - RIOT
U3219 3 Speed Pinionbell - RIOT
U3220 Alloy Wishbone; Front/Rear - RIOT (pr)
U3230 Alloy Front Suspension Plate - RIOT
U3231 Alloy Front Axle - Rascal & Riot (pr)
U3232 Alloy Rear Axle - Rascal & Riot (pr)

ELECTRONICS

G837 Mini Temp Gun - 420F 230C
G845 Glowstart & Charger UK 240v
G852 Nitro Starter Set - UK 240v
H1023 Glow Start - D Cell Power
H1033 Micro Failsafe; waterproof
H1042 Nicad Switch Harness + Ext Chg Skt

BATTERIES

G744 AAA 1000 NiMh - Card 4
G745 AAA Rx Battery NiMh 800 - 6.0v
G746 AAA Alaline Battery - Pk 4

TOOLS AND ACCESSORIES

H1009 Lexan Scissors; curved
H1016 Fuel Bottle - 250cc
H1017 Fuel Bottle - 500cc
H1018 5 Way Glow Plug Wrench
H1025 4 Way Glow Plug Wrench
H1030 Nitro Cleaner Aerosol 500ml
H1037 Pipercross Air Filter Oil - Aerosol
H1038 Pipercross Air Filter Cleaner - Aerosol
U2789 Schumacher Hex Driver - 1.5mm
U2790 Schumacher Hex Driver - 2.0mm
U2791 Schumacher Hex Driver - 2.5mm
U2792 Schumacher Hex Driver - 3.0mm
U2793 Schumacher Hex Driver - 0.050
U2794 Schumacher Driver - T10 TORX
U2795 Schumacher M3 Nut Driver
U2796 Schumacher M4 Nut Driver
U2818 Schumacher Body Reamer

SAFETY

This product is not suitable for children under 14 years of age unless supervised by an adult.

Select an area for assembly that is away from the reach of small children. The parts are small and can be swallowed by children causing choking and possible internal injuries.

Shock fluids, grease and Adhesives should be kept out of childrens reach. They may be toxic and were not intended for human consumption.

Exercise care when using hand tools, sharp instruments or power tools during assembly.

Read the instructions fully and read all manufacturers warnings and cautions for any additional items that may be used for assembly purposes.

Nitro Fuel is extremely hazardous READ all the manufacturers Warnings before opening the Container.

ALWAYS drive your car safely, away from public roads, and be aware of any people or animals near you. MODEL CARS CAN BE DANGEROUS!

WARNINGS

Use good quality fuel with synthetic oil such as Model Technics Dynaglow, Jets, Magnum, O'Donnel or Blue Thunder, with 16% -25% nitro content. We do not recommend castor oil based fuels, as it leaves a "sticky residue" which can cause the Pull start one way bearing to slip. A higher nitro content fuel will give more power, but will make the engine run hotter.

Nitro fuel, particularly racing fuels with a high nitro content and low oil content, is very corrosive, and can cause the engine to rust if fuel is left inside it. We recommend running the car completely out of fuel, if it is to be left unused for a few days. This can be done by allowing the fuel tank to empty or by squeezing the fuel line until the engine stops. After run oil such as Ultimate Racing UR0903 also helps to reduce corrosion. Remove the glo plug or air filter, and put a few drops of after run oil into the engine. Then turn the engine over a few times with the pull start or e-start to circulate the oil around the moving parts. We cannot warranty a rusty engine.

NEVER run the engine without the air filter fitted and never pull the Pull Start cord to full length use short strokes only.

Don't run the car at full throttle with the wheels off the ground, the engine MAY blow up in a matter of seconds.

Learn to use your power with respect. Very few surfaces can cope with full power. If you use full power everywhere you WILL break things!

Always ensure the transmitter & receiver batteries are fully charged before use.

Always ensure that all nuts and screws are tight and that the gear mesh is correct.

Run in a new engine by using a rich fuel mixture, to ensure plenty of lubrication, and use no more than half throttle for the first 2 or 3 tanks of fuel.

Superglue the tyres to the wheels as they may come off at high speeds. Running tyres with a larger diameter of those supplied with the kit will over-gear the car. This will cause excessive loads and thus un-due wear and tear

This product is not a toy. It is a hobby product capable of high performance, but will require regular maintenance. Learn to drive the car slowly at first, away from solid objects. The Riot is capable of Small jumps and stunts, but heavy impact can cause damage.

www.racing-cars.com

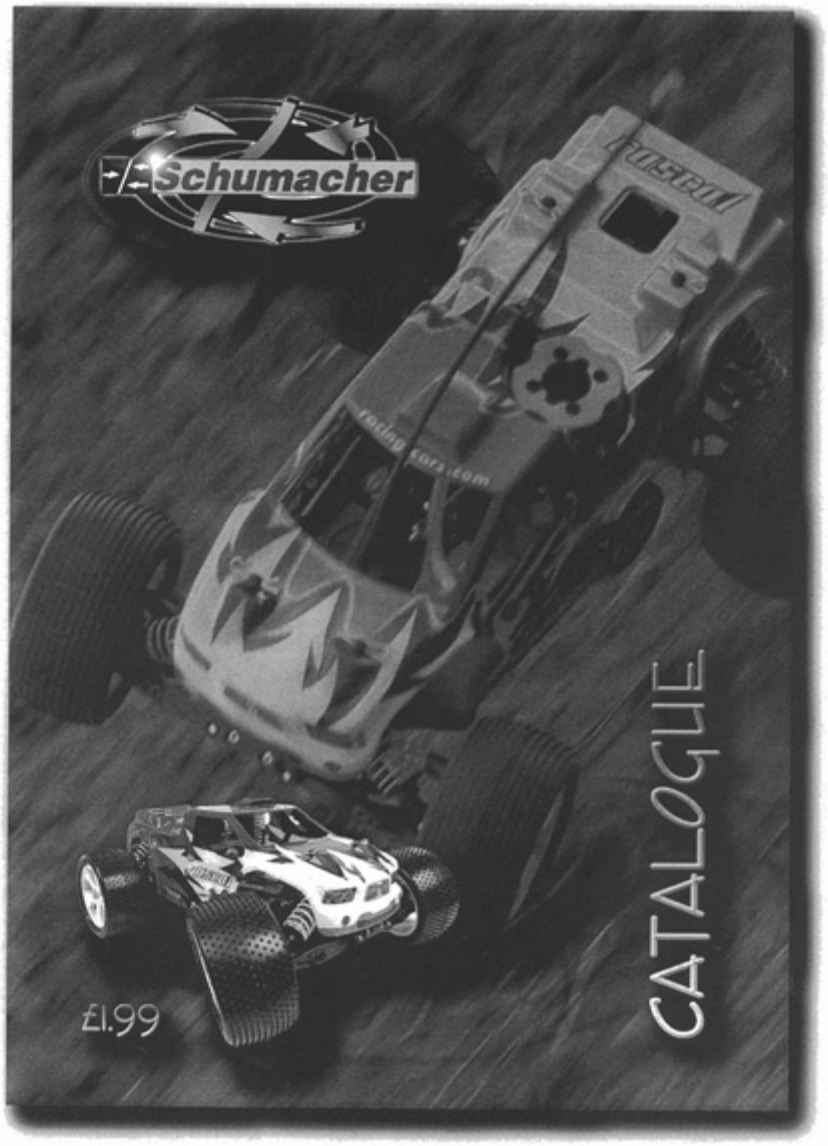

Schumacher Racing
71-73 Tenter Road
Moulton Park
Northampton
NN3 6AX
ENGLAND

www.racing-cars.com

Schumacher USA Inc
6302 Benjamin Road
Suite 404
Tampa
Florida 33634
U.S.A