Schumacher

SST Sport

INSTRUCTION MANUAL

ISSUE 2

S956

IMPORTANT SAFETY NOTES

- ☐ This product is not suitable for children under the age of 14, without the direct supervision of an adult.
- ☐ Select an area for assembly that is away from reach of very small children. The parts are small and can be swallowed by children causing choking and possible internal injuries.
- ☐ Exercise care when using any hand tools and sharp instruments during construction.
- ☐ Carefully read all manufacturers warnings and cautions for any parts used in the construction & use of your **S.S.T.**



POINTS WHERE SHOCK OIL SHOULD BE APPLIED



POINTS WHERE AXLE GREASE SHOULD BE APPLIED
(It will reduce friction & assure smooth movement)



POINTS WHERE SILICONE GREASE SHOULD BE APPLIED

Do not use excessive force when tightening the selftapping screws, or you may strip the thread in the plastic. It is recommended to stop tightening it when the threaded part on the screw goes into the plastic part and you feel some resistance from the tightening.

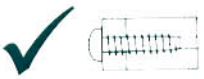

Good

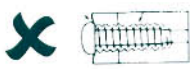

Over tighten and you may strip the thread in the plastic

In line with our policy of continous development the exact specification of the kit may vary.

MISSING OR DEFECTIVE PARTS

In the unlikely event of any problems with your new kit you should contact the model shop where you purchased, quoting part number, bag number and batch

FOR BEST PERFORMANCE, IT IS VERY IMPORTANT THAT GREAT CARE IS TAKEN TO ENSURE THE FREE MOVEMENT OF ALL PARTS.

ADDITIONAL ITEMS REQUIRED
EQUIPEMENTS NECESSAIRES
ACCESORIOS ADICIONALES
BENÖTIGTES ZUBEHÖR
NÖDVÄNDIGA TILLBEHÖR
ACCESSORI NECESSARI

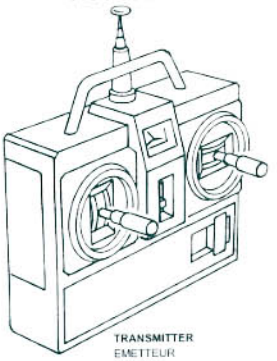

TRANSMITTER
EMETTEUR
EMISORA
FERNSTEUERSENDER MIT MINDESTENS 2 KANÄLEN
RADIOSTYRNING MED MINST 2-KANALER
TRASMITTENTE 2 CANALI



8 PEN CELLS (FOR TRANSMITTER)
8 PILES POUR L'EMETTEUR
8 PILAS (PARA LA EMISORA)
8 MIGNON-ZELLEN FÜR SENDER
8 ST BATTERIER FÖR SÄNDAREN
8 BATTERIE PER TRASMITTENTE

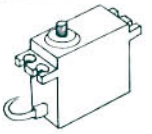

STEERING SERVO
SERVO DE DIRECTION
SERVO DE DIRECCION
LENKSERVO
SERVO FÖR STYRNING
SERVOCOMANDO DELLO STERZO

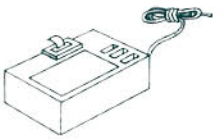

RECEIVER
RECEPTEUR
RECEPTOR
EMPFÄNGER
MOTTAGARE
RICEVENTE

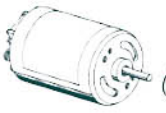

MOTOR & PINION
MOTEUR ET PIGNON
MOTOR Y PIÑON
MOTOR & MOTORRITZEL
ELMOTOR & PINIONG
MOTORE E PIGNONE



NICAD STICK PACK
PACK D'ACCUS
BATERIA RECARGABLE
AKKUPACK
ACKPAKET
BATTERIA RICARICABILE

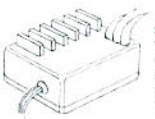

SPEED CONTROLLER
VARIATEUR ELECTONIQUE
CONTROL DE VELOCIDAD
FAHRTENREGLER
ELEKTRONISKT FARTREGLAGE
VARIATORE ELETTRONICO DI VELOCITA

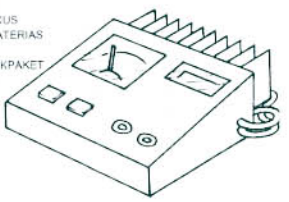

NICAD CHARGER
CHARGEUR D'ACCUS
CARGADOR DE BATERIAS
LADEGERÄT
LADDARE FÖR ACKPAKET
CARICABATTERIE



PAINT FOR BODYSHELL
BOMBE DE PEINTURE POUR LA CARROSSERIE
PINTURA CARROCERIA
LEXANFARBEN FÜR DIE KAROSSERIE
LEXANFÄRG TILL KAROSSEN
VERNICE SPRAY PER POLICARBONATO

Schumacher

SST Sport

TOOLS REQUIRED



POZI SCREWDRIVER
TOURNEVIS PHILIPS
ATORNILLADOR DE ESTRELLA
KREUZSCHLITZ SCHRAUBENZIEHER
STJÄRNSKRUVMEJSEL
CACCIAVITE A CROCE



7mm AF SOCKET SPANNER
CLE DE 7mm À PIPE OU EMMANCHÉE
LLAVE DE TUBO DE 7mm
STECKSCHLÜSSEL 7mm
7mm HYLSNYCKEL
CHIAVE A TUBO DA 7mm



5.5mm AF SOCKET SPANNER
CLE DE 5.5mm À PIPE OU EMMANCHÉE
LLAVE DE TUBO DE 5.5 mm
STECKSCHLÜSSEL 5.5 mm
5.5mm HYLSNYCKEL
CHIAVE A TUBO DA 5.5mm



FLAT SCREWDRIVER
TOURNEVIS PLAT
ATORNILLADOR PLANO
SCHRAUBENZIEHER
SKRUVMEJSEL
CACCIAVITE A TAGLIO



6mm DRILL BIT
OUTIL DE FORAGE 6 mm
BROCA DE 6 mm
BOHRER 6 mm
6mm BORR
PUNTA DA TRAPANO DA 6mm

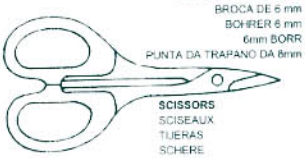

SCISSORS
CISEAUX
TIJERAS
SCHERE
SAX
FORBICE

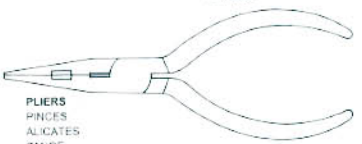

PLIERS
PINCES
ALICATES
ZANGE
TÅNG
PINZA A BECCHI SOTTILI



SCALPEL
CUTLER
CUCHILLA
SCHARFES MESSER
HOBBYKNIV
CUTTER



5.5mm AF SPANNER
CLE PLATE DE 5.5mm
LLAVE PLA 5.5mm
GABELSCHLÜSSEL 5.5 mm
5,5mm FAST NYCKEL
CHIAVE INGLESE DA 5.5mm

RULER

MILLIMETRES

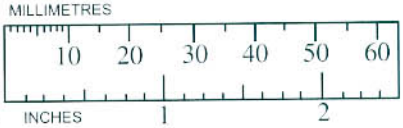

Schumacher

SST Sport

TRANSMISSION

1

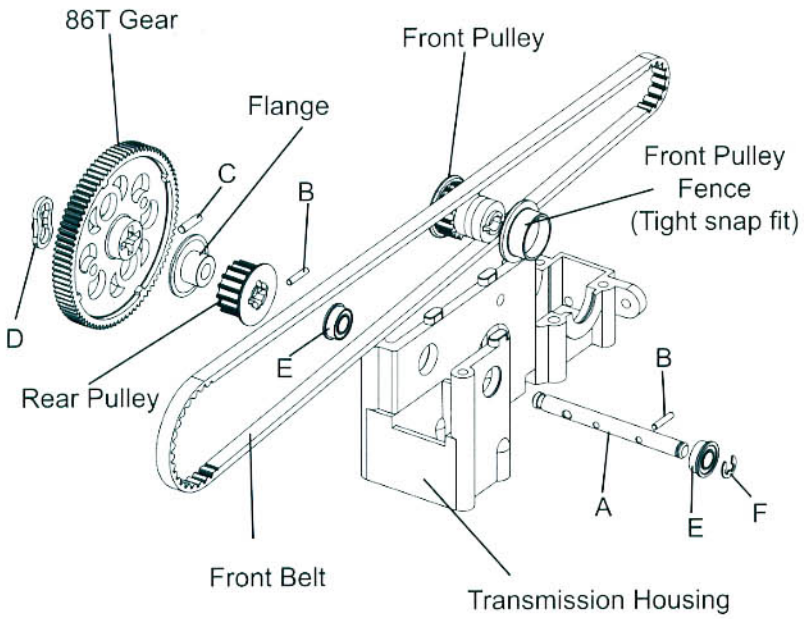

A	X1	LAYSHAFT
B	X2	PIN 1.5mm DIA x 8mm
C	X1	PIN 2.0mm DIA x 8mm
D	X1	GEAR CLIP
E	X2	8x4x3 FLANGED BALL BEARING
F	X1	'E' CLIP

2

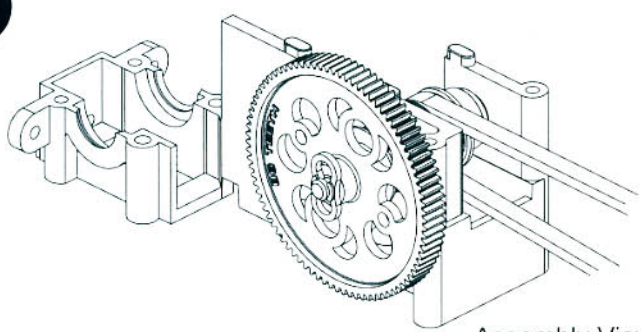

Assembly View 1

3

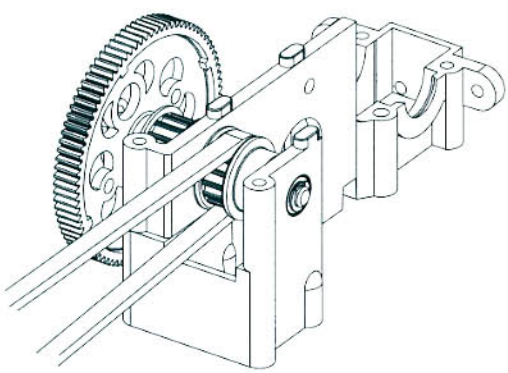

Assembly View 2

SHOCK MOUNTING

BAG 5

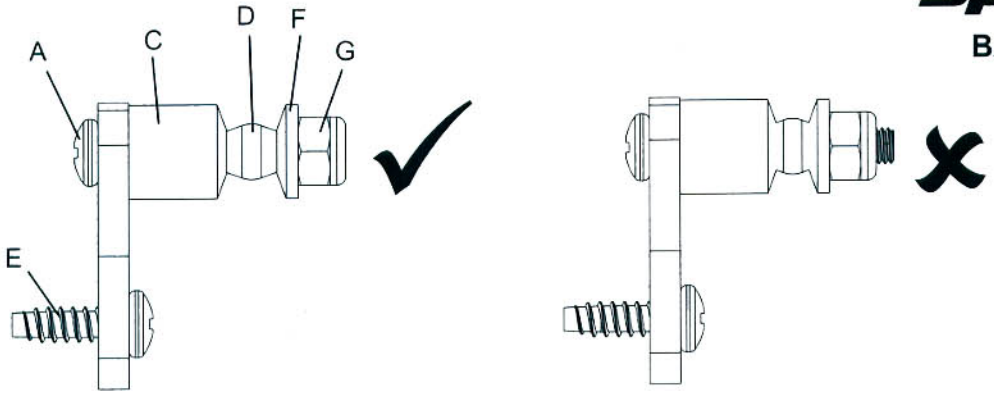

HUB CARRIER MOUNTING / ADJUSTMENT

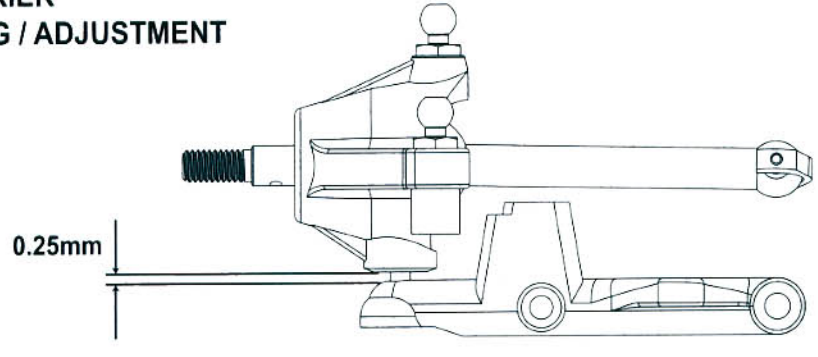

RALLY

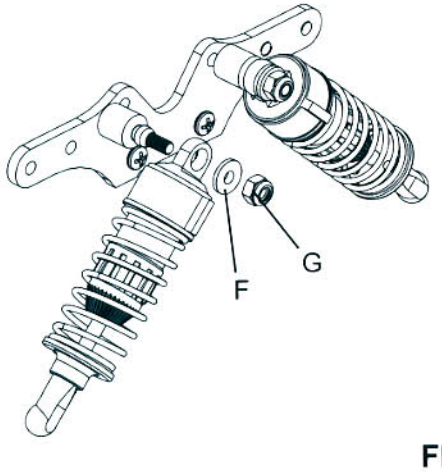

TOURING

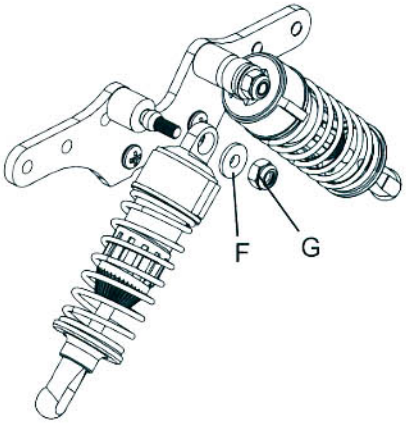

FRONT + REAR SHOCK MOUNTING

Schumacher

SST Sport

BAG 6

A X4 — M4 NYLOC NUT

B X4 — M4 STEEL WASHER

C X4 — PIN HEX MOULDING

D X4 — PIN 1.5x12

E X4 — DISC SPRING

1

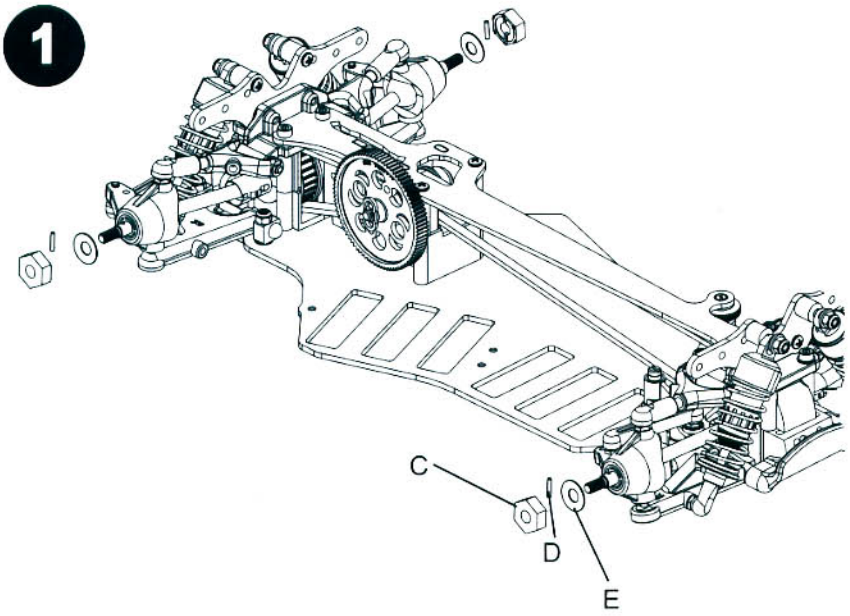

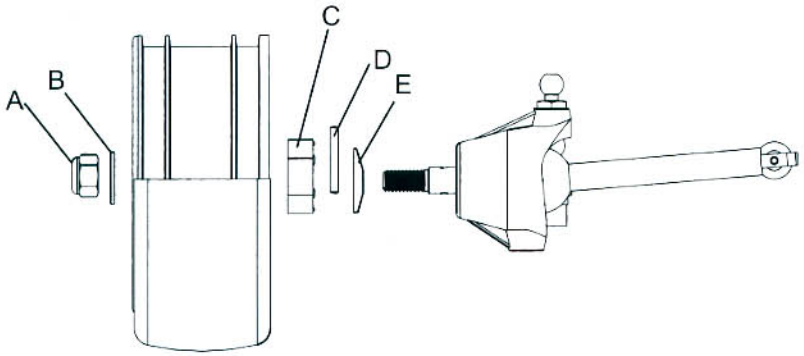

2

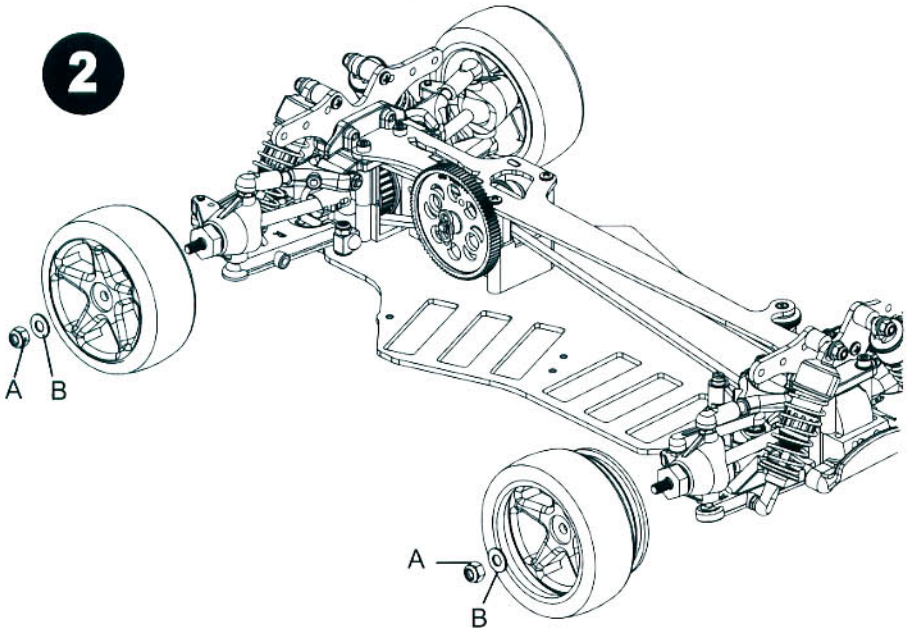

DIFF/DIRT COVER

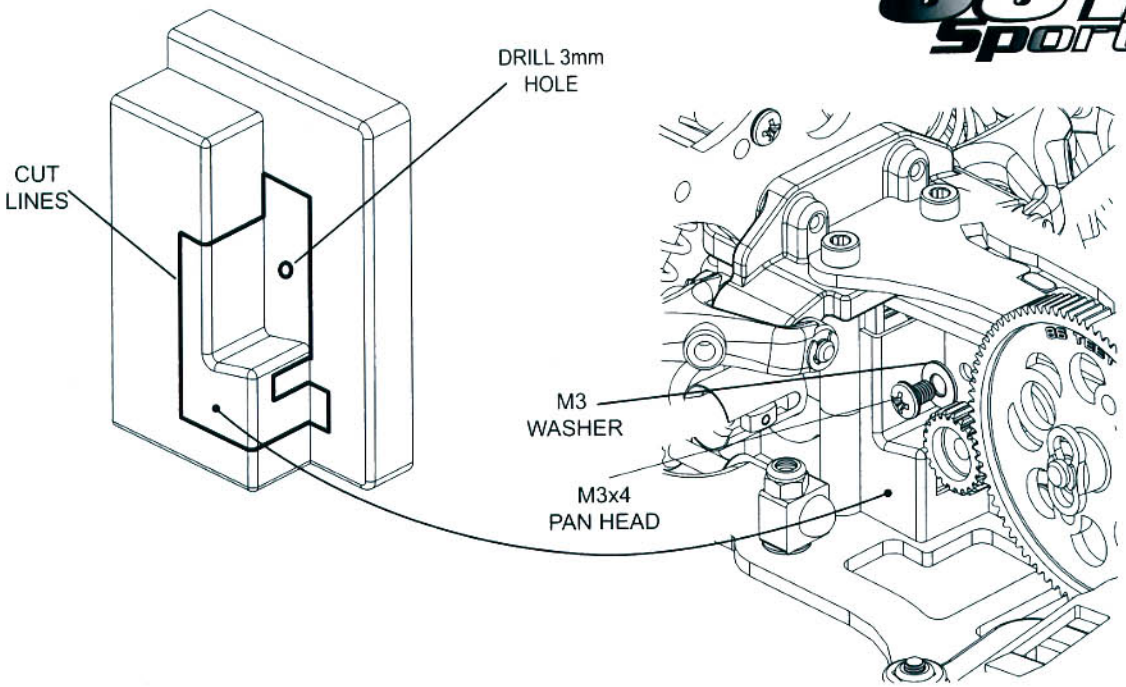

BODY MOUNTS

FRONT + REAR

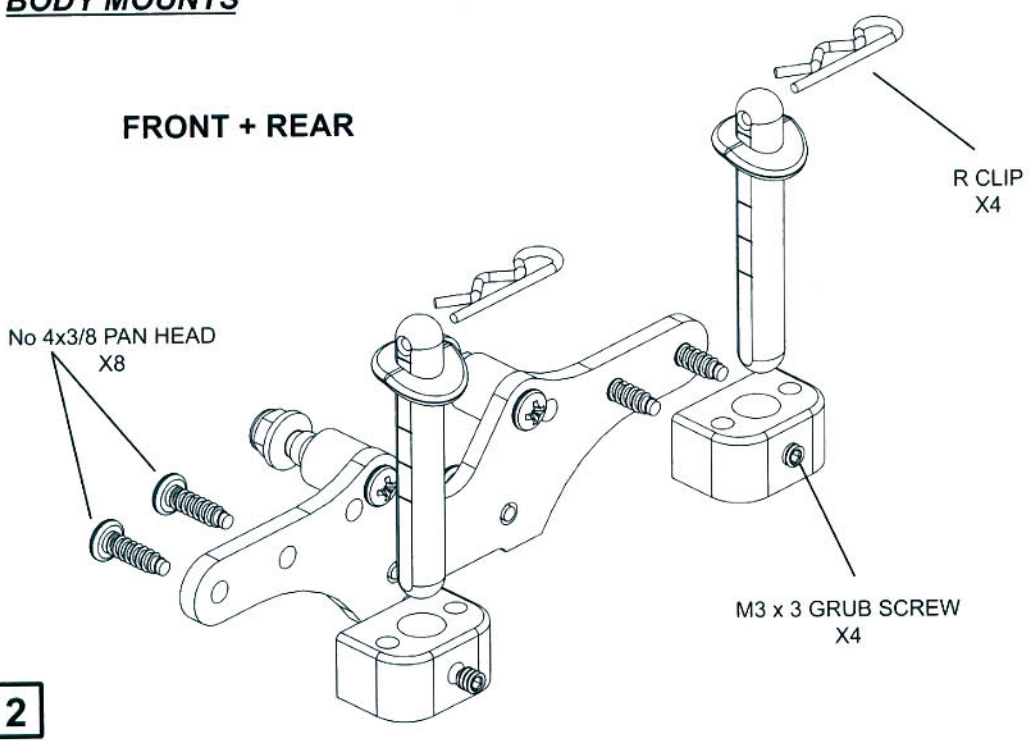

Schumacher

SST Sport

BODYSHELL

Carefully cut away the shaded areas. Then, using a file or some abrasive paper, smooth the cut edges. Any ragged edges or score lines may cause the bodyshell to crack or split when in use.

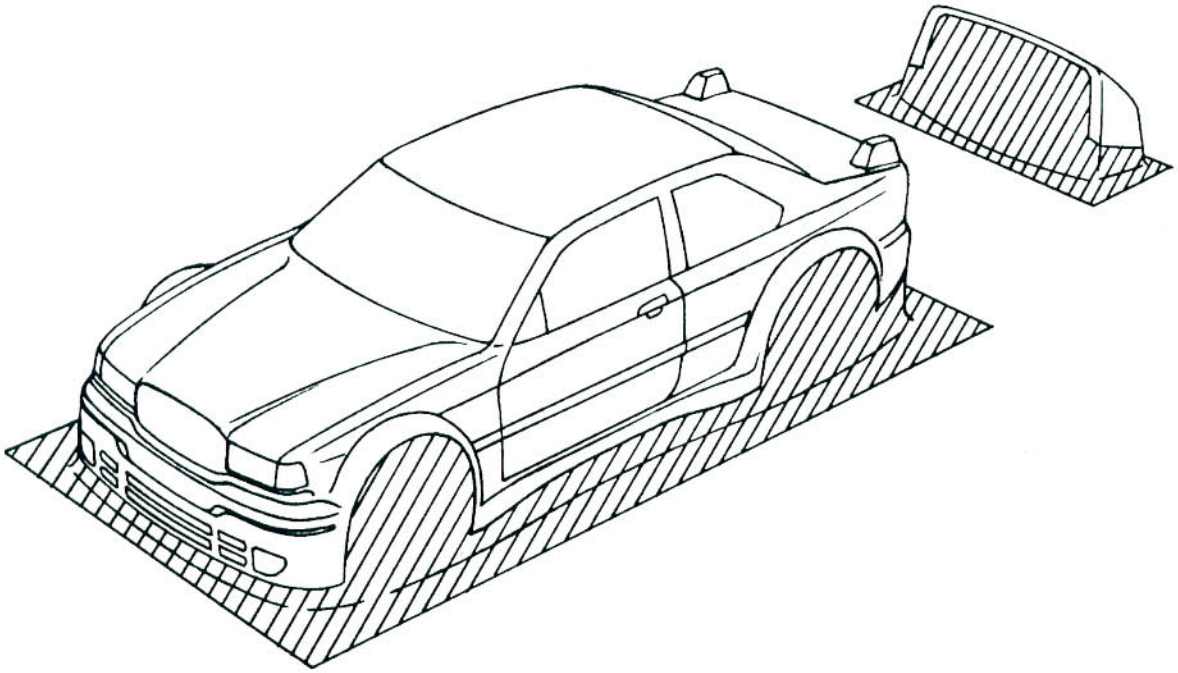

Painting Bodyshells

First wash the bodyshell to remove any dirt or oil. Rinse thoroughly. Mask the windows and any area of the bodyshell that you require to achieve a particular colour scheme. Always use only Polycarbonate paint and spray dark colours first. When paint is dry remove masking and finish with decals.

TYRES

APPLY INSTANT CEMENT

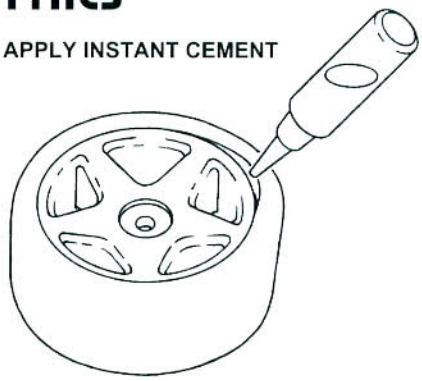

Schumacher

SST Sport

STICK PACK NICAD

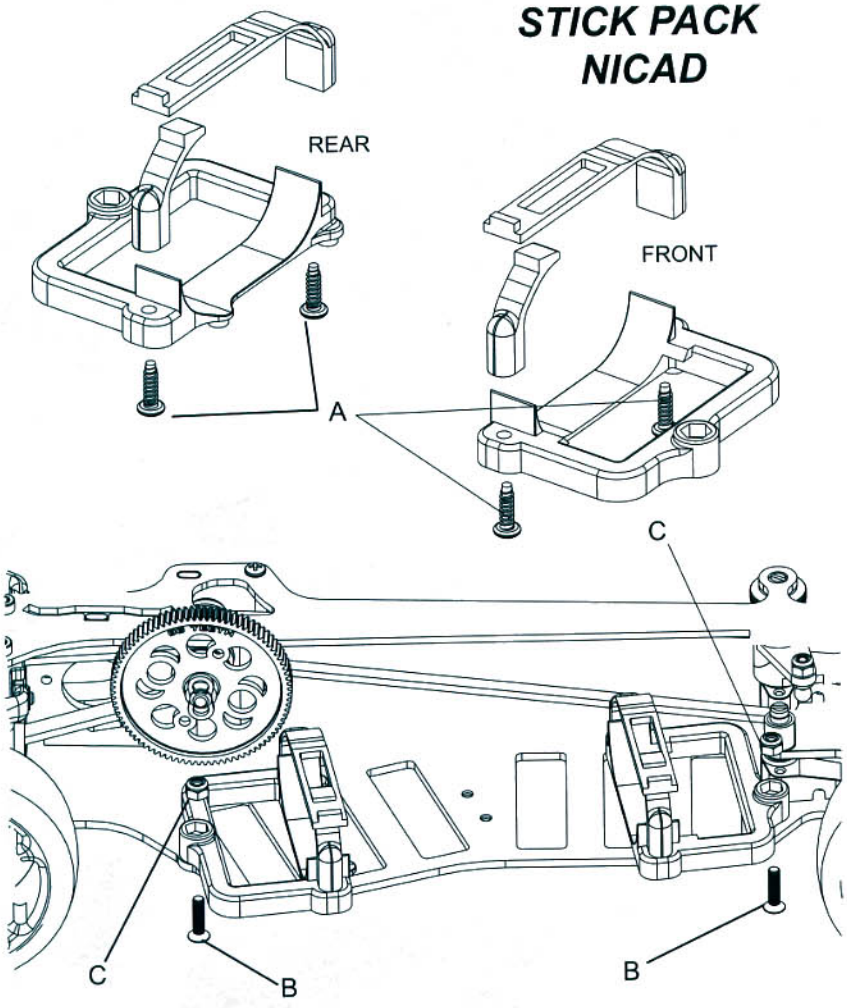

SIDE STICK MOUNTING

A	X4	No4x1/2 PANHEAD SELFTAP SCREW
B	X2	M3x12 CSK SCREW
C	X2	M3 NYLOC NUT

SADDLE PACK NICAD

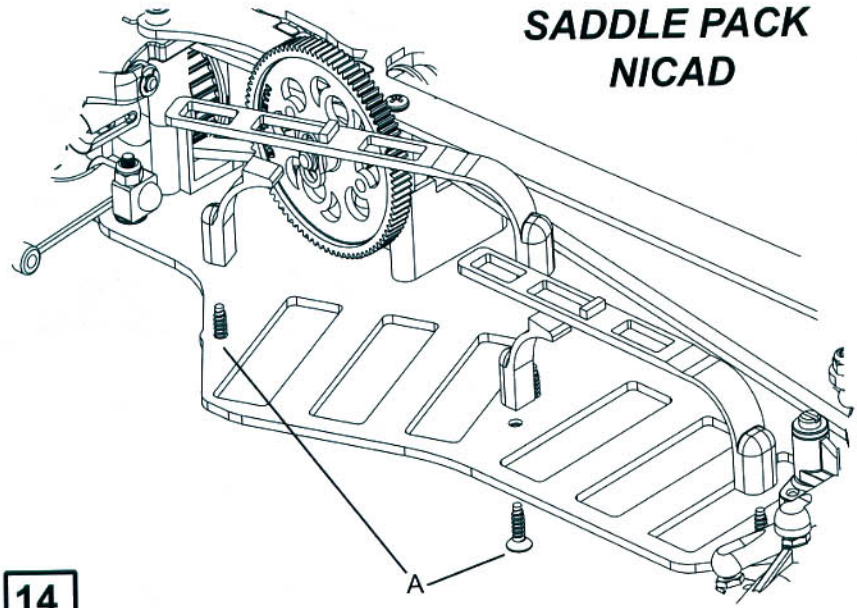

SIDE SADDLE MOUNTING

A	X4	No4x3/8" SELFTAP CSK SCREW

Schumacher

SST Sport

STEERING SERVO

A	X1	BALL STUD SHORT
B	X2	M3 NYLOC NUT
C	X1	No4x5/8 CSK SCREW
D	X1	M3x12 CSK SCREW
E	X3	M3 WASHER
F	X2	No4x3/8 PANHEAD SCREW

1

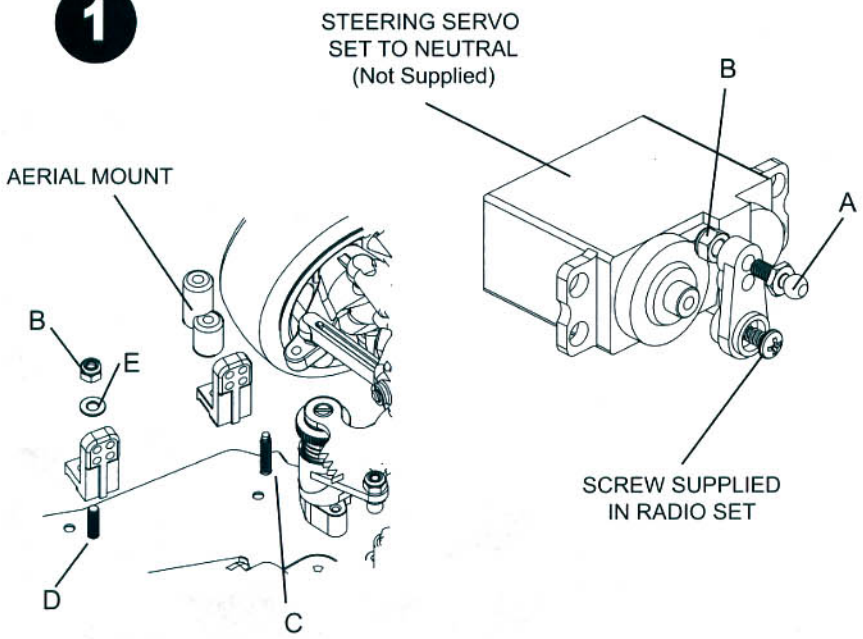

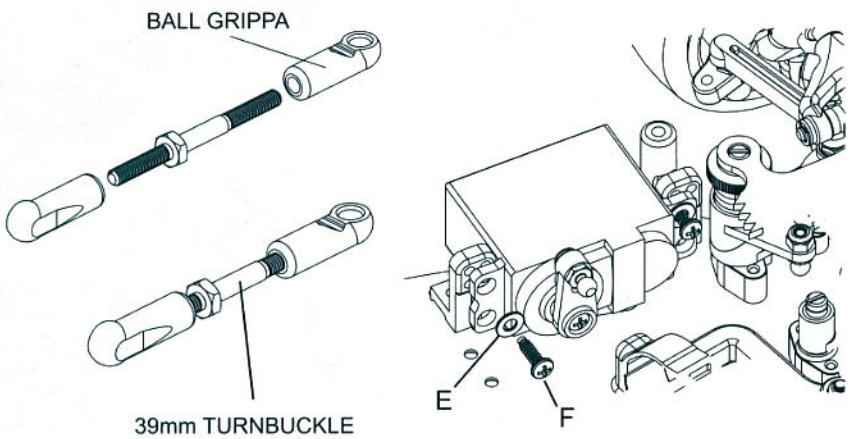

2

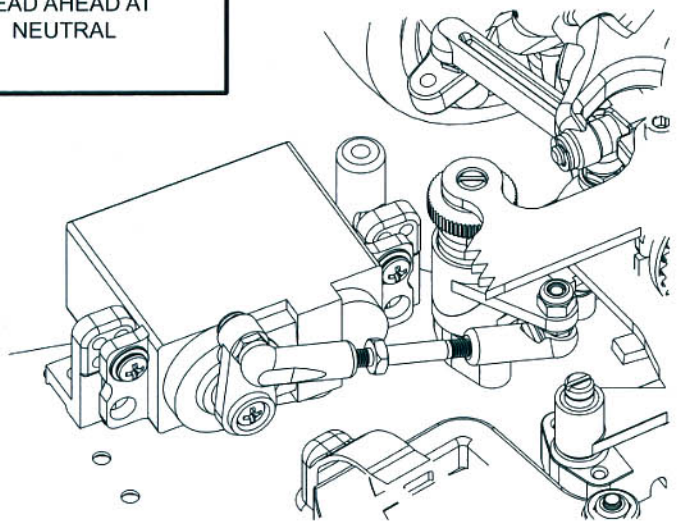

WARNING

Motors more powerful than 27 turn stock require Ball Bearings for high speed running.
U2177J Ball Bearing and Shim Set - SST Sport.

Schumacher

SST Sport

G984D
RACE POWER SET

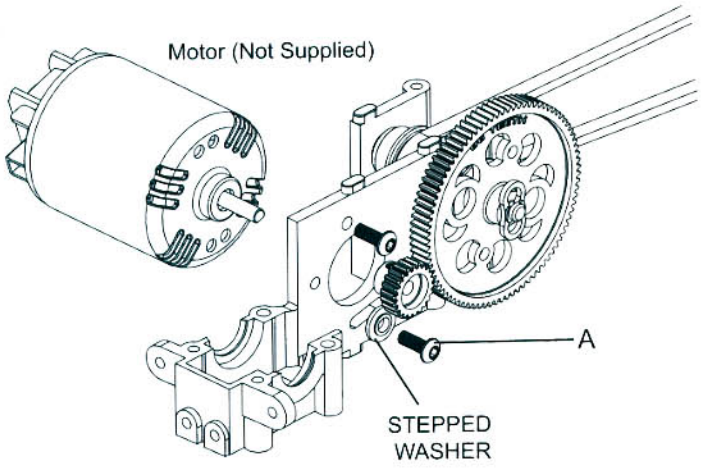

A  M3x8 BUTTON HEAD
X2

OPTIONAL PARTS
G984D Race Power Set.
Race motor and Electronic speedo (forward / brake only)

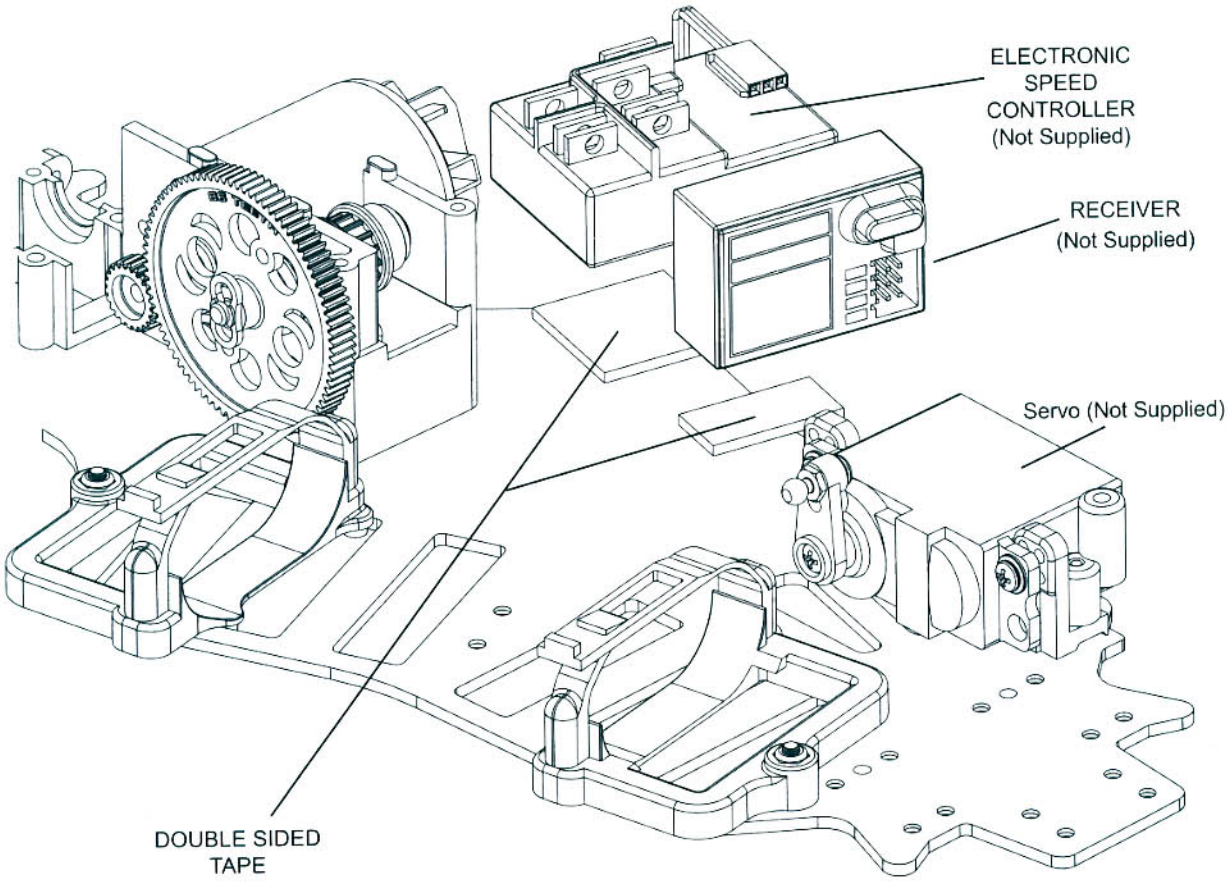

THE FOLLOWING STEPS SHOW THE CORRECT METHOD FOR BUILDING & SETTING UP YOUR DIFFS

Schumacher

SST Sport

DIFF SERVICE

1

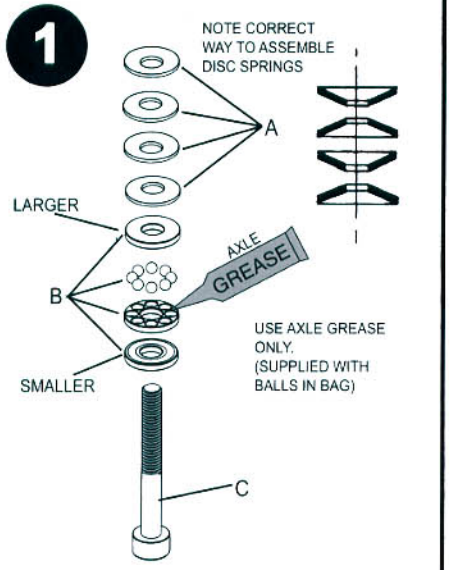

2

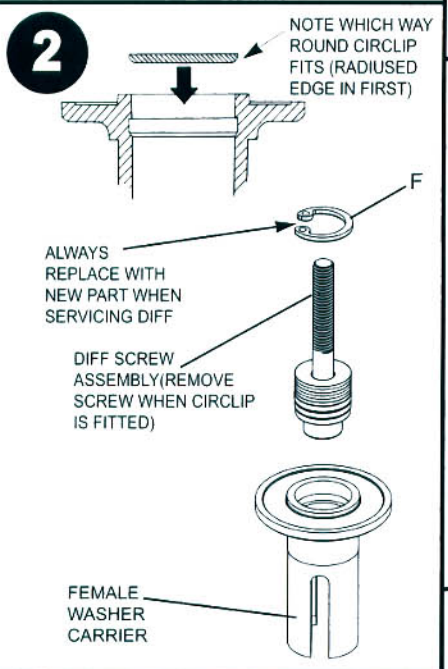

3

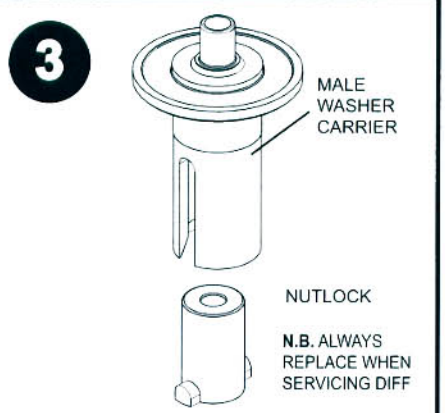

4

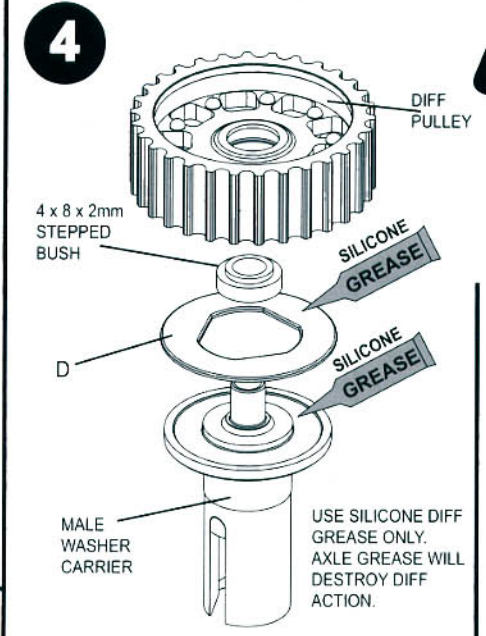

5

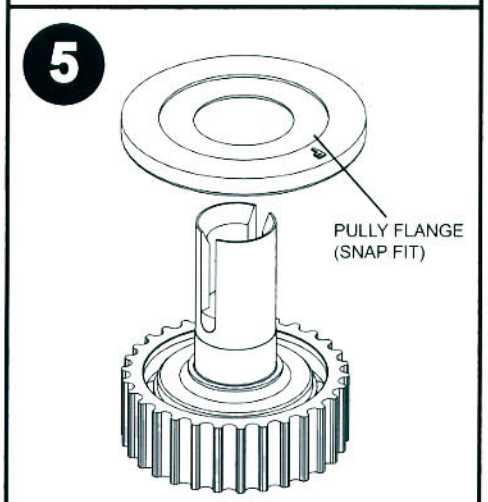

6

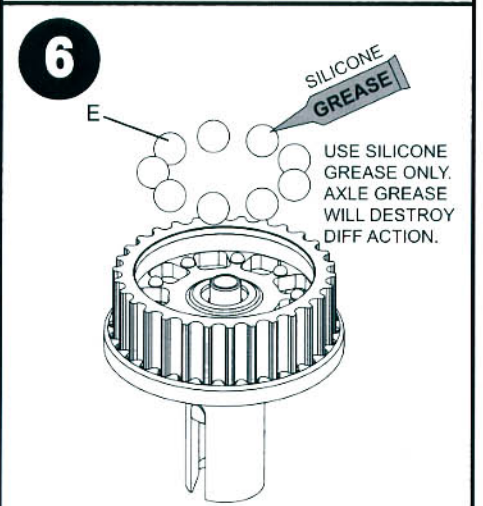

A	X4	DISC SPRING
B	X1, X1, X8, X1	THRUST RACE ASSEMBLY
C	X1	DIFF SCREW
D	X1	TRILOBE DIFF WASHER
E	X9	4mm DIA DIFF BALL
F	X1	CIRCLIP

Schumacher

SST Sport

DIFF SERVICE

7

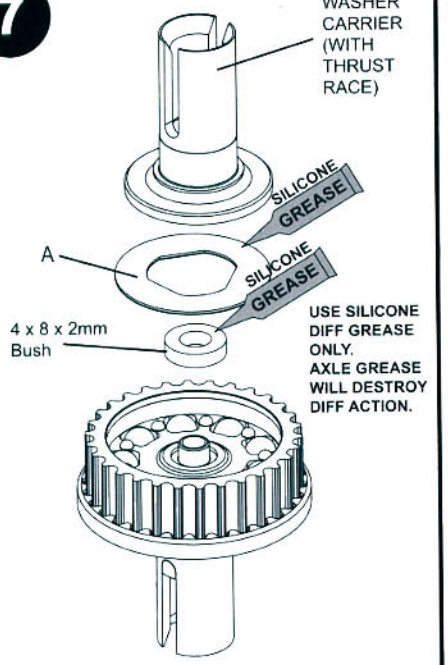

8

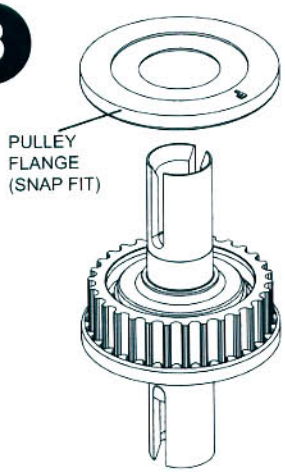

9

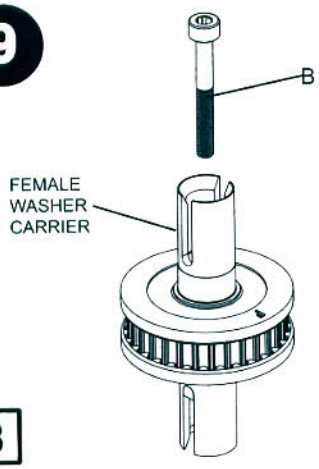

10

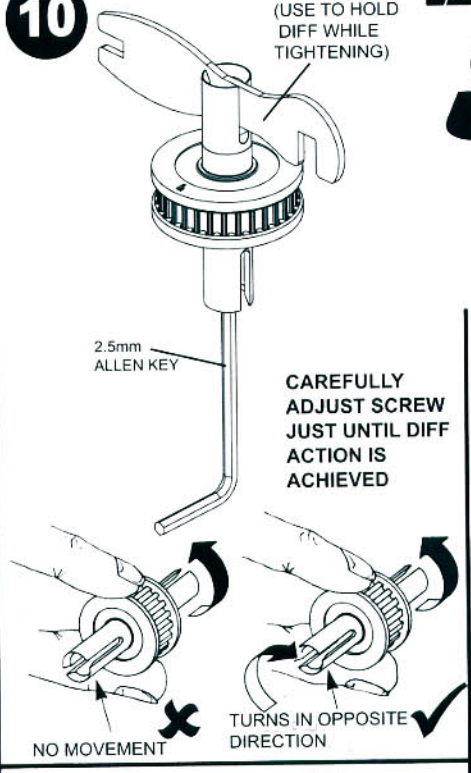

11

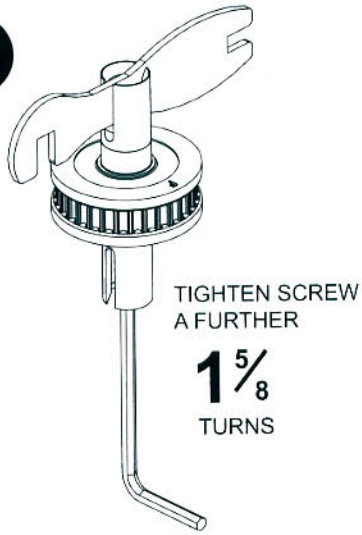

12

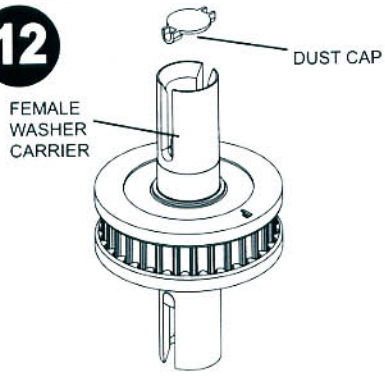

A TRILOBE DIFF WASHER X1

B DIFF SCREW X1

FRONT DIFF SHOWN NOW REPEAT FOR REAR DIFF

DO'S & DON'TS
FAIRE ET NE PAS FAIRE
QUE HACER Y QUE NO HACER

ENGLISH

DO READ AND FULLY UNDERSTAND THE INSTRUCTION BOOK BEFORE BUILDING.

DO TAKE CARE WHEN BUILDING.
SOME PARTS MAY HAVE SHARP EDGES. KEEP SMALL PARTS OUT OF REACH OF SMALL CHILDREN.

DO MAKE SURE ALL SCREWS ARE TIGHT. RECHECK PERIODICALLY.

DO DISCONNECT THE NICAD BEFORE TURNING TRANSMITTER OFF.

DO REMOVE ANY SAND, MUD, DIRT, GRASS OR WATER BEFORE PUTTING YOUR MODEL AWAY.

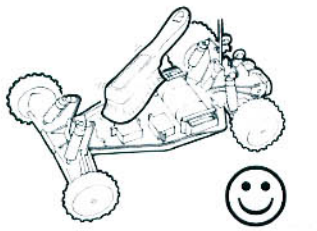

DO USE YOUR MODEL UNDER THE DIRECT SUPERVISION OF AN ADULT.

DO TAKE CARE NOT TO RUN INTO PEOPLE.

DO USE A RECOMMENDED CHARGER FOR THE NICADS AND FOLLOW THE INSTRUCTIONS CORRECTLY. OVER CHARGING OR CHARGING INCORRECTLY USING INFERIOR CHARGERS CAN CAUSE THE NICAD PACK TO BECOME DANGEROUSLY HOT.

DO ASK YOUR LOCAL MODEL SHOP FOR ANY ADVICE - THEY SHOULD ALSO BE YOUR FIRST CALL IF YOU NEED ANY SPARE PARTS. YOU ARE A VALUED CUSTOMER AND THEY WILL BE PLEASED TO LOOK AFTER YOU.

DO REGULARLY CHECK THE CHARGER UNIT FOR POTENTIAL HAZARDS SUCH AS DAMAGE TO THE CABLE, PLUG, CASING OR OTHER DEFECTS. ENSURE ANY DAMAGE IS RECTIFIED BEFORE USING THE CHARGER AGAIN.

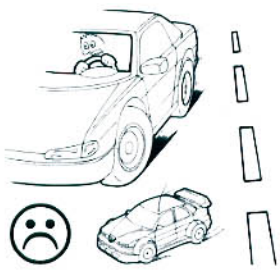

DON'T USE YOUR MODEL IN THE STREET.

DON'T RUN YOUR MODEL IN WET CONDITIONS.

DON'T ALLOW THE TRANSMITTER BATTERIES TO RUN FLAT AS THE CAR MAY THEN RUN OUT OF CONTROL.

DON'T ALLOW ANY METAL PART TO SHORT CIRCUIT THE NICAD OR SPEED CONTROLLER.

DON'T STALL MOTOR. THE SPEED CONTROL WILL FAIL WITHIN SECONDS IF POWER IS APPLIED TO THE MOTOR WHEN THE CAR CANNOT MOVE.

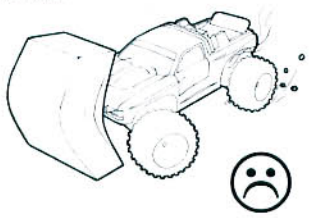

FRANÇAIS

FAIRE LIRE ET ENTIEREMENT COMPRENDRE LA NOTICE AVANT DE COMMENCER LE MONTAGE.

FAIRE FAITES ATTENTION LORS DU MONTAGE.
CERTAINES PIECES PEUVENT AVOIR DES PARTIES COUPANTES OU PIQUANTES. LES TENIR À L'ECART DES PETITS ENFANTS.

FAIRE ASSURER VOUS QUE TOUTES LES VIS SONT BIEN SERRÉES. LES VERIFIER LE PLUS SOUVENT POSSIBLE APRÈS UTILISATION.

FAIRE BIEN NETTOYER AVANT DE LA RANGER. ENLEVER TOUTE TRACE DE SABLE, TERRE, POUSSIERE, HERBE.....

FAIRE ATTENTION. DEBRANCHER TOUJOURS VOTRE BATTERIE (ACCUS) *AVANT* D'ETEINDRE VOTRE EMETEUR.

FAIRE UTILISER LE PLUS SOUVENT POSSIBLE SOUS LA SURVEILLANCE D'UN ADULTE.

FAIRE FAITES ATTENTION A NE PAS ROULER PARMIS LES GENS.



FAIRE POUR LA CHARGE DE VOTRE BATTERIE N'UTILISER QU'UN CHARGEUR PREVU À CET EFFET ET LIRE LES INSTRUCTIONS AVANT DE VOUS EN SERVIR. UTILISER UN AUTRE TYPE DE CHARGEUR PEUT CAUSER DE GRAVE DEGATS À VOTRE BATTERIE.

FAIRE DEMANDER À VOTRE DETAILLANT LOCAL POUR N'IMPORTE QU'ELLES QUESTIONS. IL DOIT ETRE VOTRE PREMIER APPEL OU CONTACT POUR VOS BESOINS EN PIECES DETACHEES. IL SERA TRES CONTENT DE S'OCCUPER DE VOUS.

FAIRE VÉRIFIEZ SOUVENT L'ETAT DE VOS CONNECTIONS SUR VOTRE BATTERIE. FILS COUPES, PRISE DESSOUDEE, GAINE FONDUE... ET LES RECTIFIEZ AVANT DE VOUS EN SERVIR.

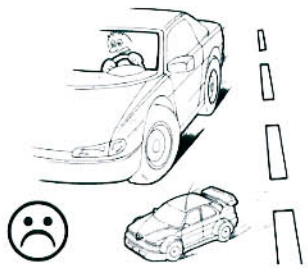

NE PAS UTILISER VOTRE VOITURE SUR UNE ROUTE.

NE PAS ROULER DANS DES CONDITIONS HUMIDES OU PLUVIEUSES.

NE PAS ROULER SI LES PILES OU ACCUS DE VOTRE EMETTEUR

NE PAS METTRE D'OBJECT METTALIQUE EN CONTACT AVEC LE VARIATEUR.

NE PAS ACCELERER LORSQUE EST COINCEE SUR OU QUELQUE CHOSE -VOUS RISQUEZ DE DETRUIRE CONTRE VARIATEUR ET EGALEMENT VOTRE ACCUS!!! VOTRE

NE PAS ROULER SUR DES SURFACES INADAPTER ECHELLE DES OBSATCLES TROP GRANDE.

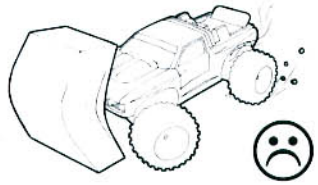

ESPAÑOL

SI LEA DETENIDAMENTE EL MANUAL DE INSTRUCCIONES ANTES DE COMENZAR EL MONTAJE.

SI CUANDO MONTE EL COCHE TENGA CUIDADO CON ALGUNAS PIEZAS QUE POSEEN ARISTAS CORTANTES O QUE POR SU TAMAÑO PUEDEN HERIRLE A USTED O ALGUN NIÑO.

SI REVISE EL APRIETE DE LOS TORNILLOS PERIODICAMENTE.

SI DESPUES DE JUGAR LIMPIELO DE POLVO TIERRA Y AGUA Y SEQUELO BIEN.

SI DESCONECTE PRIMERO EL COCHE Y LUEGO EL EMISOR.



USE BAJO LA SUPERVISION DE UN ADULTO.

SI TENGA CUIDADO CUANDO RUEDE ENTRE EL PUBLICO.

SI UTILIZE UN CARGADOR APROPIADO PARA BATERIAS DE NIQUEL CADMIO.

SI COMPRUEBE REGULARMENTE EL ESTADO DE LOS CABLES Y CONEXIONES.

SI CONSULTE CON SU VENDEDOR HABITUAL SOBRE LOS ACCESORIOS Y REPUESTOS DISPONIBLES PARA SU MODELO EN CONCRETO.

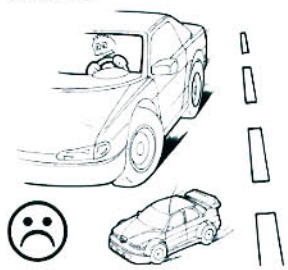

NO NO UTILICE EN LA VIA PUBLICA NI EN UN LUGAR ABIERTO AL TRAFICO.

NO NO USE CON SUELO MOJADO O EN CONDICIONES DE LLUVIA.

NO NO RUEDE CON LAS BATERIAS ESCARGADAS, PUEDE PERDER EL CONTROL DEL COCHE.

NO NO TOQUE LA RESISTENCIA DESPUES DE HABER RODADO YA QUE PUEDE QUEMARSE.

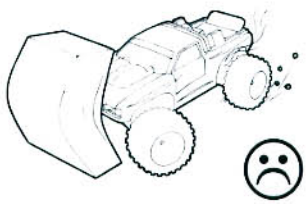

NO NO INTRODUZCA PARTES METALICAS EN EL REGULADOR DE VELOCIDAD O EN LAS BATERIAS. HAY RIESGO DE CORTOCIRCUITO.

NO NO RUEDE CON EL COCHE DURANTE MUCHO TIEMPO A BAJA VELOCIDAD, YA QUE LA RESISTENCIA PUEDE CALENTARSE EN EXCESO. EN TAL CASO PARE HASTA QUE SE ENFRIE.

Schumacher

SST Sport

STEERING

A X1 — STEERING POST LONG

B X1 — STEERING POST SHORT

C X3 — M3 NYLOC NUT

D X3 — BALL STUD SHORT

E X2 — BALL STUD LONG

1

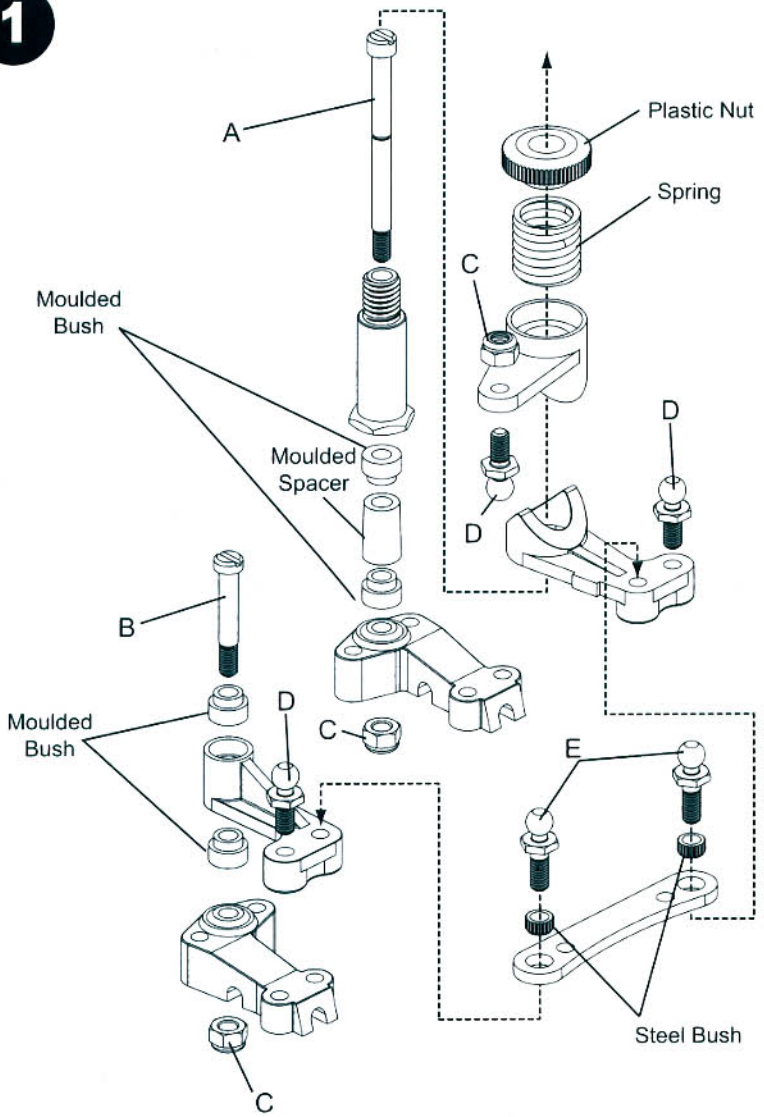

2

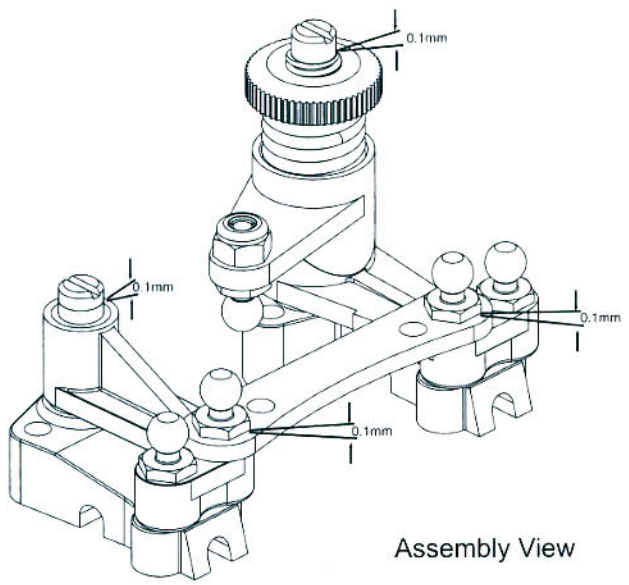

Assembly View

Leave a small 0.1mm clearance at this point. Do not overtighten, Steering must be free.

Schumacher

SST Sport

SHOCK ABSORBERS

1

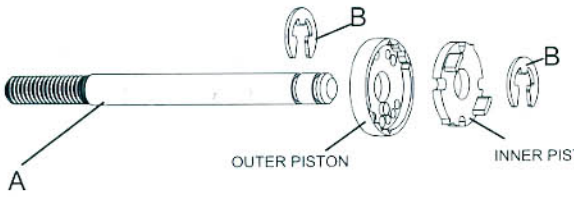

X4

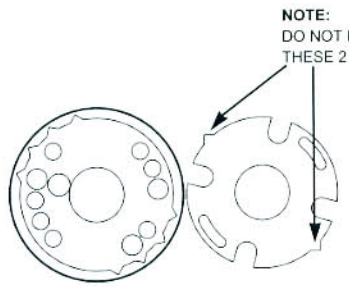

MAKE SURE PISTON CORRECTLY LOCATED

2

DAMPING ADJUSTMENT

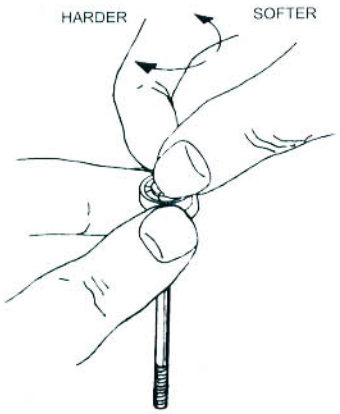

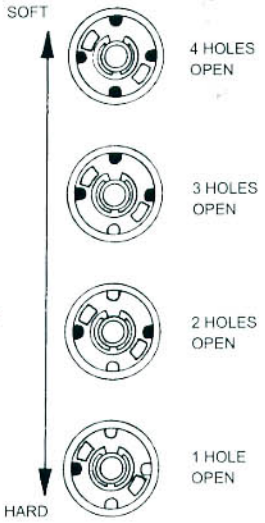

3

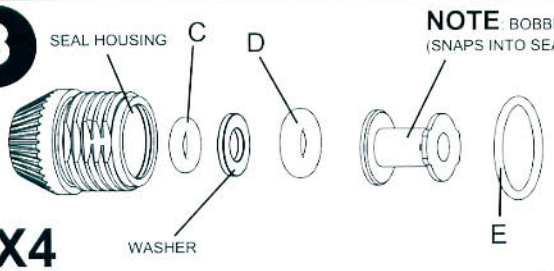

X4

ENSURE THAT THE SEAL HOUSING MOULDINGS ARE FREE FROM FLASH

ASSEMBLED SEAL HOUSING

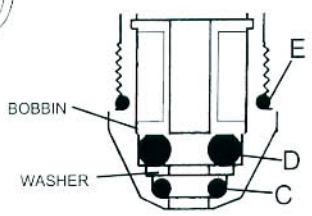

4

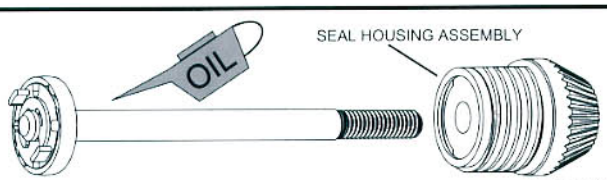

X4

CHECK FOR FREE PISTON MOVEMENT INSIDE SHOCK BODY.

ENSURE THAT PISTON SLIDES FREELY IN THE THE SEAL HOUSING ASSEMBLY

A X4 — SHORT SHOCK ROD

B X8 — 'E' CLIP

C X4 — 'O' RING SMALL

D X4 — 'O' RING THICK

E X4 — 'O' RING BIG THIN

Schumacher

SST Sport

SHOCK ABSORBERS

5

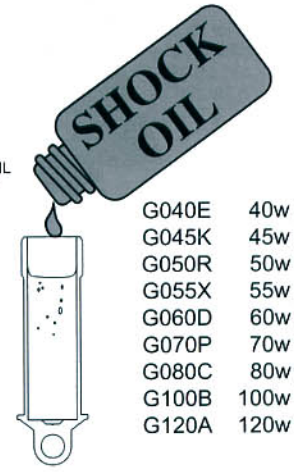

FILL BODY WITH OIL (TO BOTTOM OF THREAD)

X4

G040E	40w Schumacher Silicone Shock Oil
G045K	45w Schumacher Silicone Shock Oil
G050R	50w Schumacher Silicone Shock Oil
G055X	55w Schumacher Silicone Shock Oil
G060D	60w Schumacher Silicone Shock Oil
G070P	70w Schumacher Silicone Shock Oil
G080C	80w Schumacher Silicone Shock Oil
G100B	100w Schumacher Silicone Shock Oil
G120A	120w Schumacher Silicone Shock Oil

A  BALL GRIPPA

X4

6

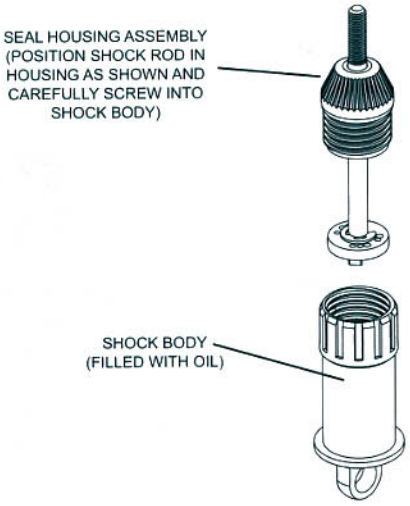

X4

7

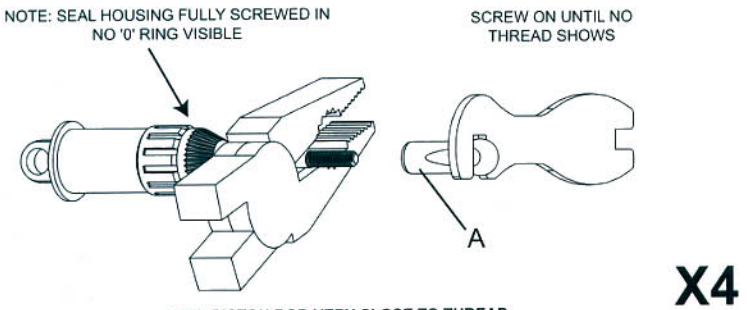

X4

GRIP PISTON ROD VERY CLOSE TO THREAD. DO NOT DAMAGE POLISHED SHOCK ROD

8

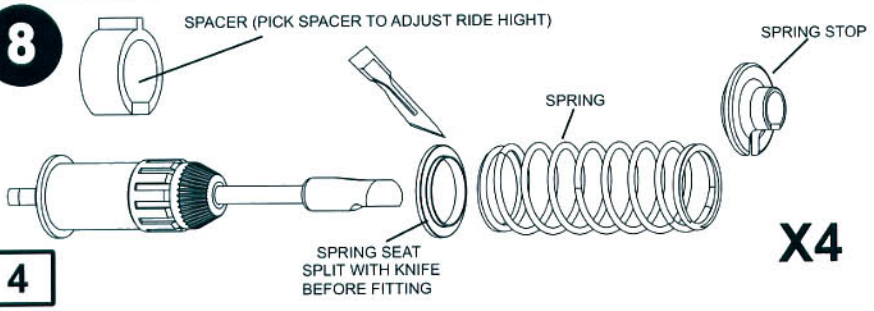

X4

Schumacher

SST Sport

1

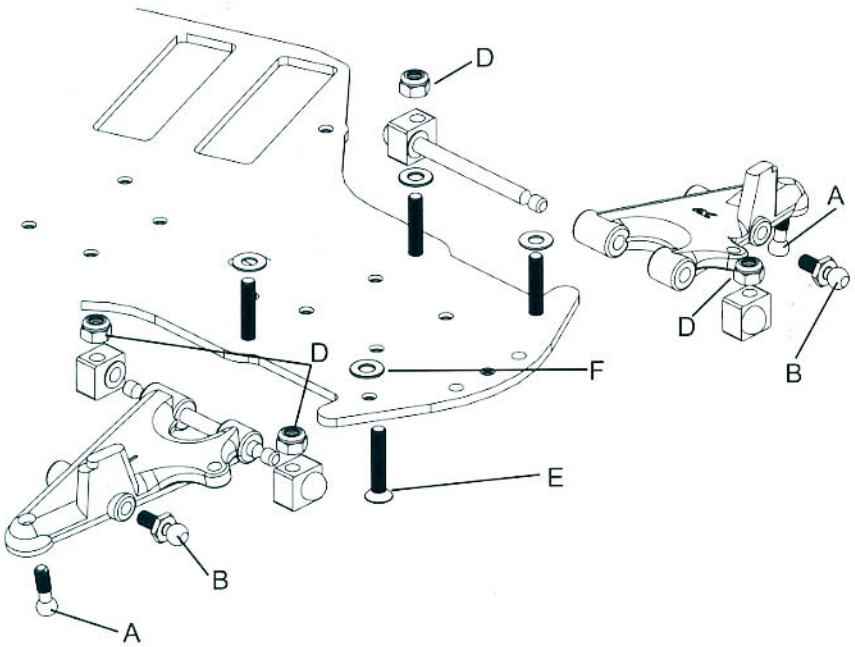



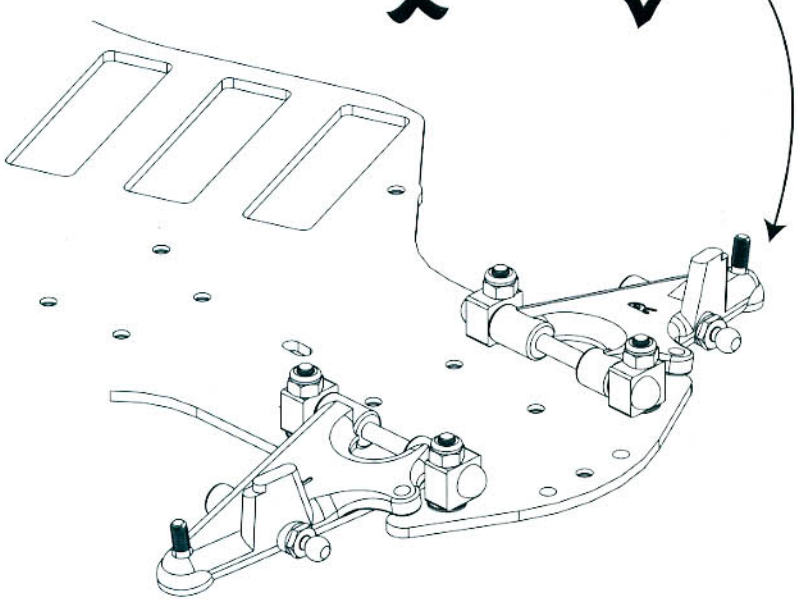

BAG 1

A	X2	ALLEN BALL STUD
B	X2	BALL STUD SHORT
C	X2	M3 X 6mm GRUB SCREW
D	X4	M3 NYLOC NUT
E	X4	M3 X 16mm CSK SCREW
F	X4	M3 STEEL WASHER

Schumacher

SST Sport

1

BAG 2

A	X16	No 4x3/8" SELFTAP CSK SCREW
B	X4	M3x8mm CSK SCREW

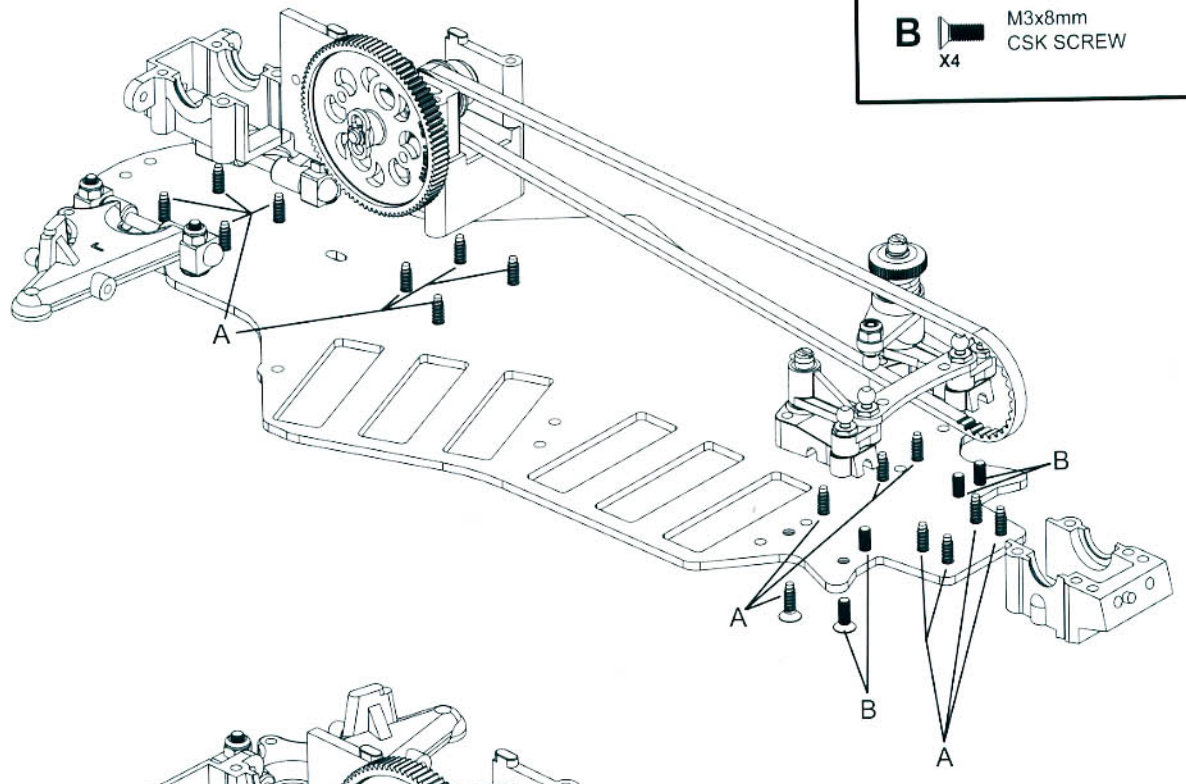

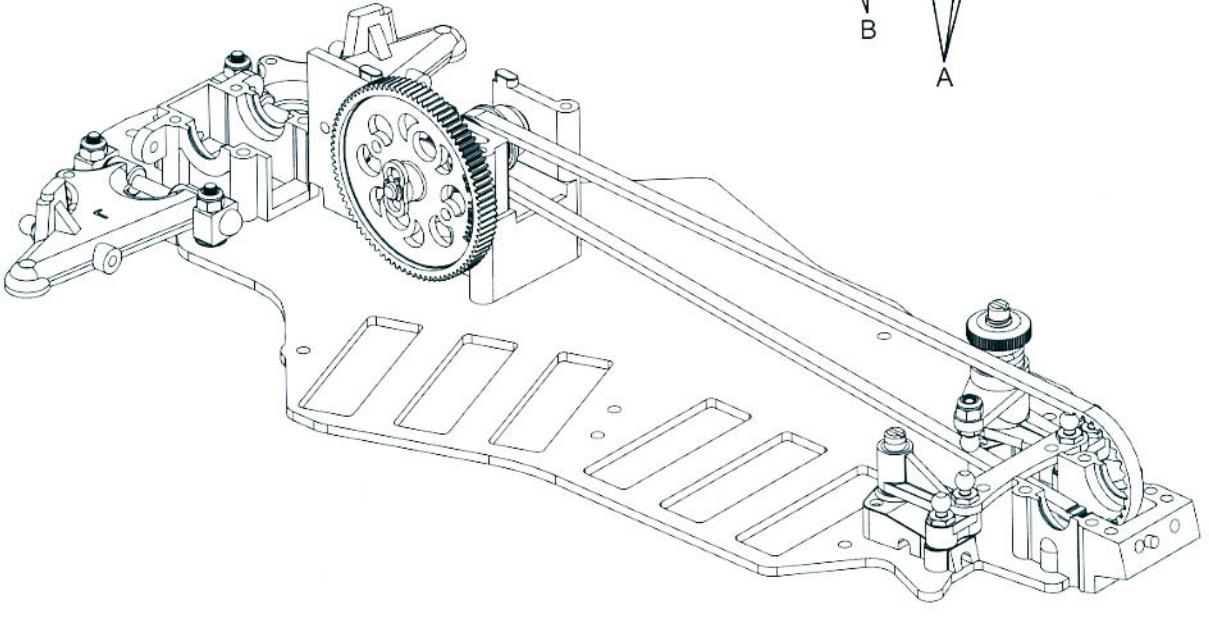

Schumacher

SST Sport

BAG 3

A X2 — ALLEN BALL STUD

B X2 — BALL STUD SHORT

C X2 — 1.6mm THICK NYLON WASHER

D X2 — FRONT WISHBONE PIVOT PIN

E X3 — No 4x1/2" SELFTAP CSK SCREW

F X2 — BALL STUD LONG

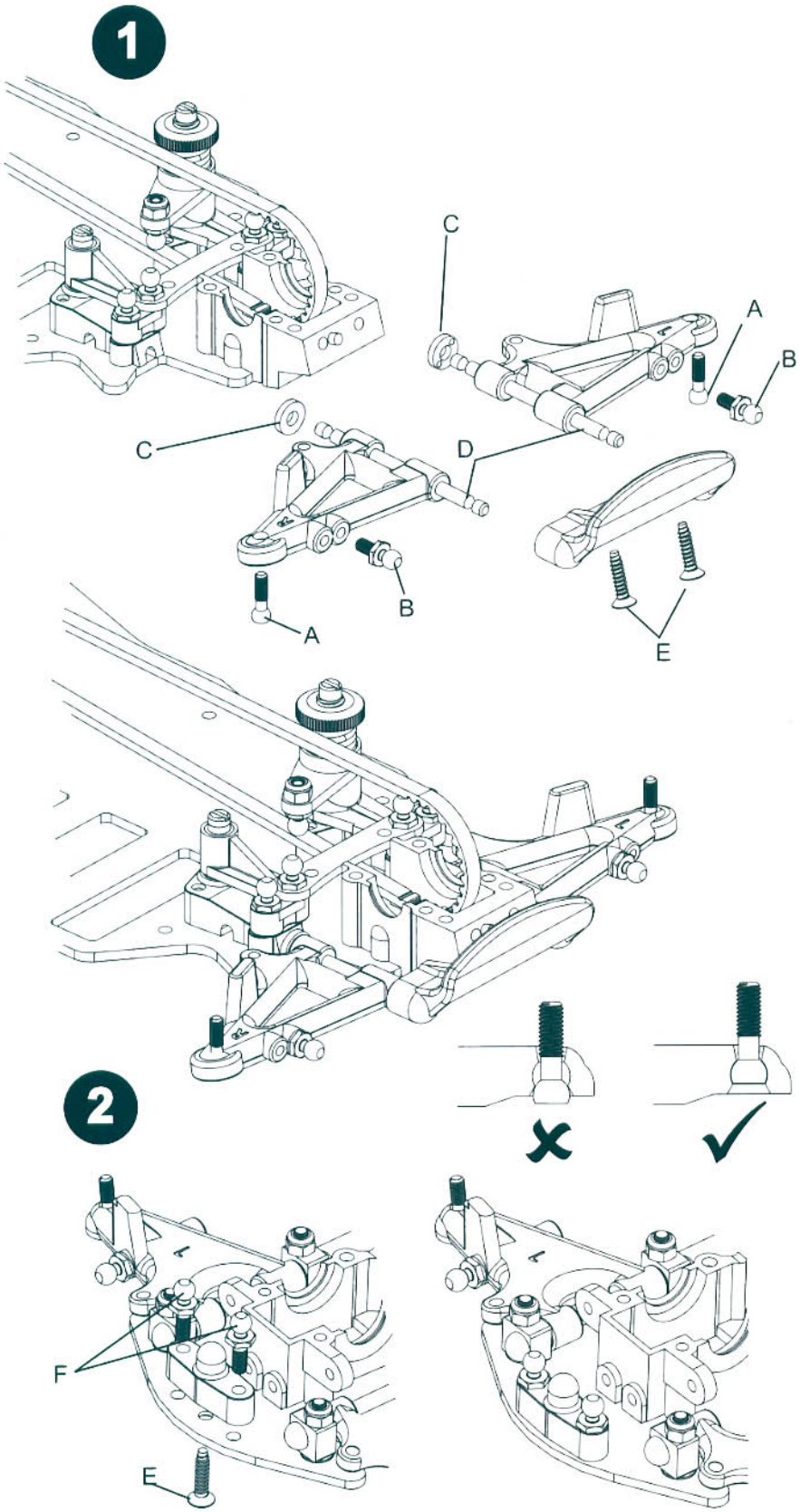

Schumacher

SST Sport

BAG 4

A	X8	M3x30mm CAPHEAD SCREW
B	X8	'E' CLIP
C	X4	M3 STEEL WASHER
D	X4	BUSH 10x15x4
E	X8	BALL STUD SHORT
F	X8	BUSH 5x10x4
G	X2	No 4x3/8 SELF TAP PAN HEAD

1

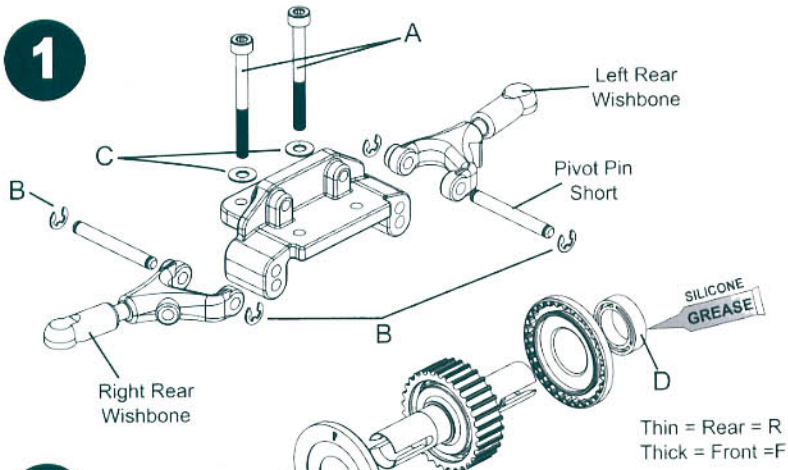

2



3

4

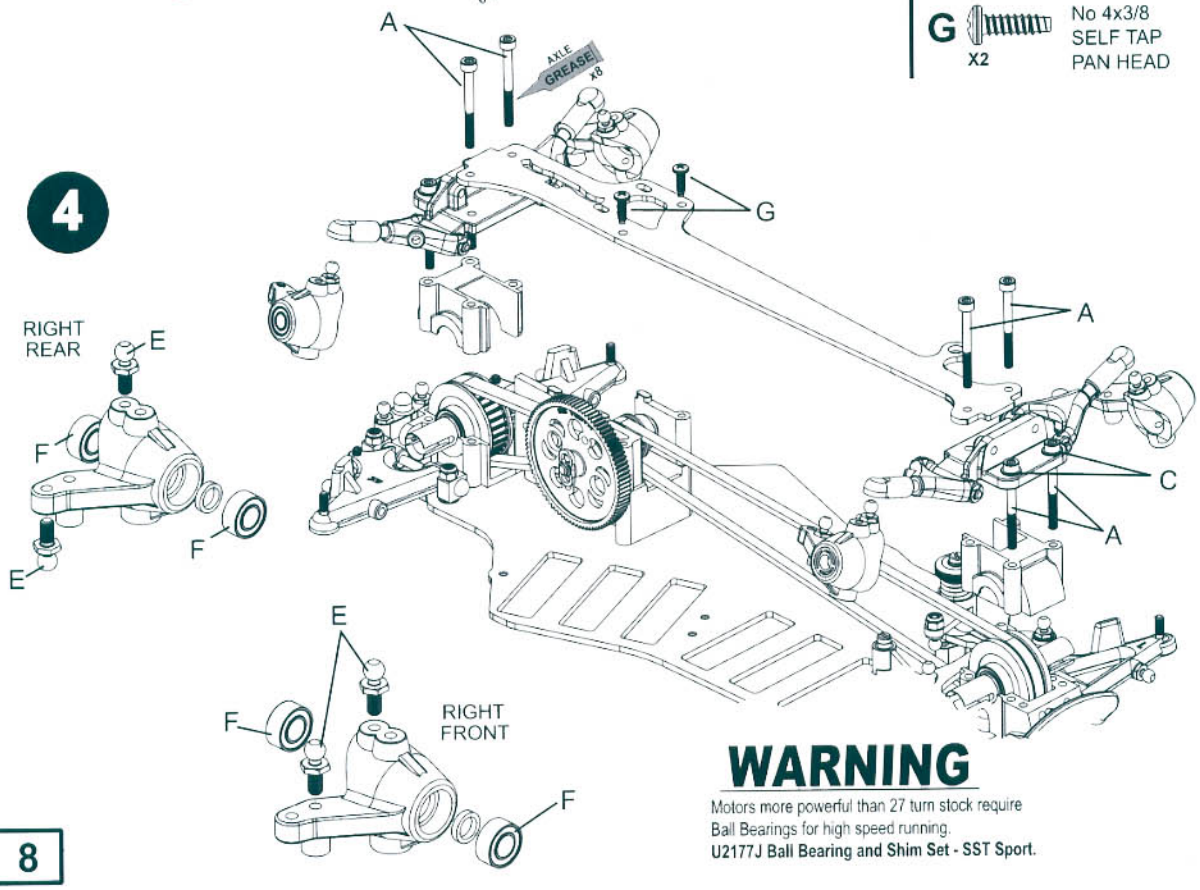

WARNING

Motors more powerful than 27 turn stock require Ball Bearings for high speed running.
U2177J Ball Bearing and Shim Set - SST Sport.

Schumacher

SST Sport

FRONT

1

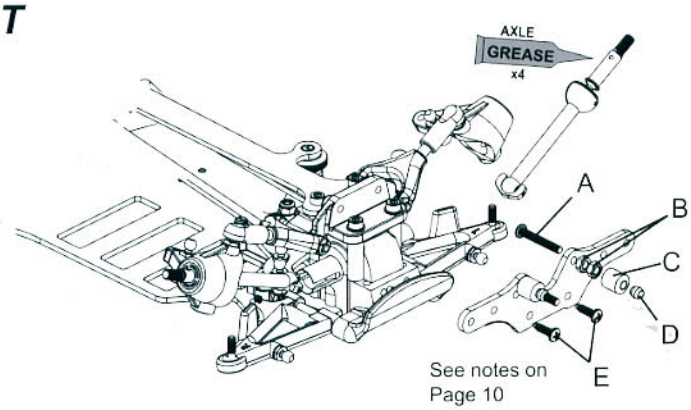

See notes on Page 10

2

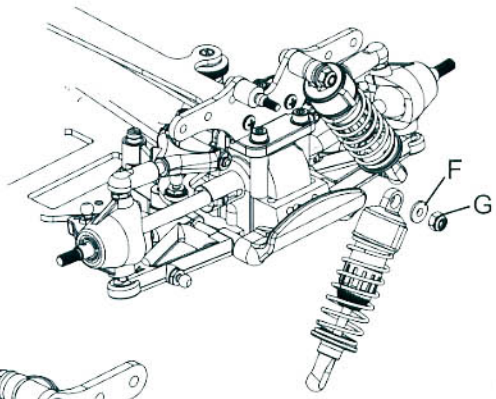

3

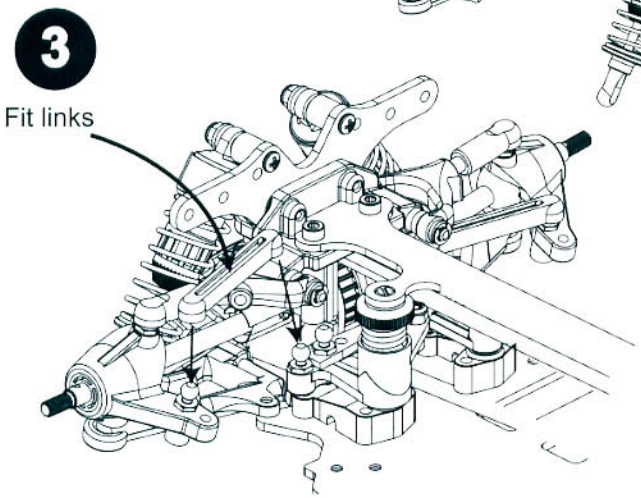

REAR

4

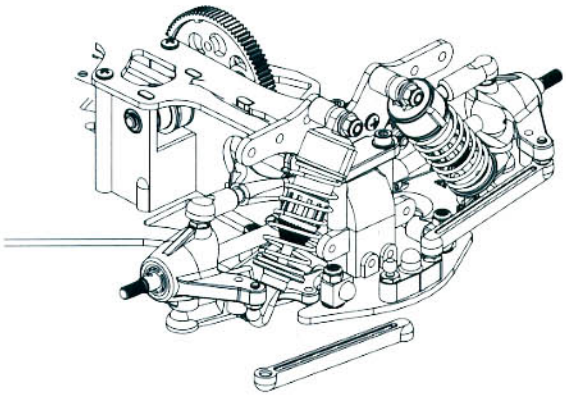

BAG 5

A	X4	M3x20mm PANHEAD SCREW
B	X8	M3 NUT
C	X4	SHOCK COLLAR
D	X4	SHOCK SPHERICAL BUSH
E	X4	No 4x3/8" SELFTAP PANHD SCREW
F	X4	SHOCK MOUNT WASHER
G	X4	M3 NYLOC NUT

Schumacher

SST

A comprehensive range of
SPEED SECRET
parts and accessories are available to make your SST SPORT or SST Pro car lighter, stronger and faster!

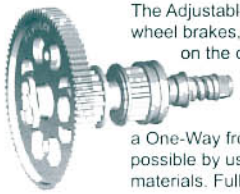

The Adjustable Braking System allows fine adjustment of the front wheel brakes, which lets you drive inside other cars under braking on the corner entry, without the risk of too much understeer. Normal one-way front drives only allow braking to the rear wheels which can make the rear end loose. Hard anodised alloy parts are used throughout including a One-Way front drive pulley and brake discs. Fine adjustment is made possible by use of a spring loaded disc brake with special friction materials. Full Four wheel drive is applied to the wheels at all times.

U2101U A.B.S Adjustable Braking System - 4WD



U1883P Adjustable Rear Upper Wishbones (pr)
Fit these to enable camber adjustment on the rear of your SST.



U2151D Steel U.J. Drive Shafts; pin axle-SST
These metal driveshafts are more crash resistant and include Schumachers revolutionary lightweight blade drive system.



U2179L SST Sport - Turnbuckle Adjuster Set
Use this Turnbuckle set to allow the adjustment of front and rear tow-in. It contains all the ball-grippas, turnbuckles and tools required, including a selection of set ups.



U1882N Adjustable Front Upper Wishbones (pr)
Fit these to enable camber adjustment on the front of your SST.



U1419K Ball Bearing Set for Differential Centre
Replaces the Plastic Bushes (Bronze in Pro Car) in the Centre of your differential. You will need one pair per diff. Set includes centre diff washer.



U1351U Short Spring Tuning Set-Colour
Range of springs allowing you to set up your SST 2000 exactly to suit the track conditions. Colour coded for easy identification of spring stiffness.



U2177J Ball Bearing and Shim Set - SST Sport
Use this set to replace all the plastic differential and plastic wheel bearings.
U2189Y Wheel Bearing and Shim Set - SST
Use this set to replace plastic wheel bearings.

Better performance and run time. A must for high speed running with motors more powerful than 27 turn stock.



U2167X Rally Undertray
Protection from water and dirt.
Use with U2168Y Rally Dirt Cover.



U1248V Ball Bearing Set Steering Post
Replaces the Bushes in the Steering Posts. You will need two pairs for both left and right steering posts. Set includes washers.



U2168Y Rally Dirt Cover
Protection from water and dirt.
Use with U2167X Rally Undertray.



U1475O Tungsten Carbide Diff Balls 4mm (pk10)
U1954V Tungsten Carbide Thrust Bearing (not shown)

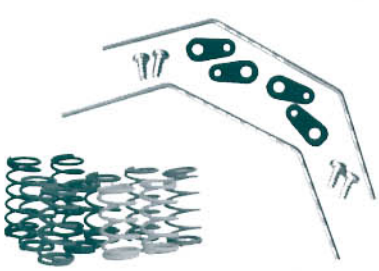

U2178K SST Sport - Spring Tuning and Anti-Roll Bars
This set includes front and rear anti-roll bars, five pairs of springs and a selection of set up sheets. Enabling you to set up your SST to suit the track conditions.



U1818U Alloy Shock Seal Housings (pr)
Purple CNC Machined precision alloy housing. Offers strength, reliabilty and super smooth operation.



U2024C Purple Ultra Short Shock Bodies (Pk4)
A set of 4 CNC machined Shock Bodies. Stronger than SST Sport plastic units.
N.B. To fit to a SST SPORT you WILL require.
Two pairs of Shock Shafts: U1557S x 2
Shock Mounts: U2169A x 1
Bumper: U2021Y x 1
Body Mounts: U2154G x 1





www.racing-cars.com

Schumacher Racing Products Ltd.
71-73 Tenter Road ~ Moulton Park ~ Northampton ~ NN3 6AX
Tel: +44(0) 1604 790580 ~ Fax: +44(0) 1604 790209

Schumacher U.S.A. Inc.
6302 Benjamin Road ~ Suite 404 ~ Tampa ~ Florida ~ 33634
Tel: (813) 889 9691 ~ Fax: (813) 889 9593