SupaStox GT

Instruction Manual



Schumacher racing-cars.com

Schumacher Racing
71-73 Tenter Road
Moulton Park
Northampton
NN3 6AX
U.K
www.racing-cars.com

Additional Items Required

Transmitter and receiver
CR151 CODE 2.4G 2 Stick 3Ch Tx+Rx
CR152 CODE 2.4G 2 Stick 3Ch Receiver ONLY



(Batteries not included)

1/12th Servo



CR194 - CORE RC -1/12th/GT12 Servo - 5Kg - 0.08 Sec
KO30114 - Servo - RSx 12 - 7.5Kg (Requires CR290)

Speed Controller
CR173 Core PACE 45R



G796 Male Connector Plugs (pk 2)
SPW1403 High Current 14AWG Wire



Li-Po Battery
CR172 CORE RC - 3200mAHr 3.7V 25C 1S Lipo



Motor **Pinion Gear**



Battery Charger



CR161 UAC50 Charger 12v/110-240v 6A

Bodyshell and Paint





CR044 Curved Body Scissors



U2818 Schumacher Body Reamer



Long nose Pliers



U2789 Hex Driver - 1.5mm
U2790 Hex Driver - 2.0mm
U2791 Hex Driver - 2.5mm



U2795 M3 Nut Driver
U2796 M4 Nut Driver

Soldering Iron
CR266 40w
CR275 80w



U3107 - Solder

SupaStock GT

Schumacher Racing stocks and distributes the following manufacturers products and full product listings are available on our website at

www.racing-cars.com

PLEASE NOTE THAT SOME OF THE PRODUCT RANGES BELOW ARE ONLY AVAILABLE IN THE UNITED KINGDOM.

IMPORTANT SAFETY NOTES

- This product is not suitable for children under the age of 14, without the direct supervision of a responsible adult.
- Select an area for assembly that is away from the reach of small children.
- The parts in this kit are small and can be swallowed by children causing choking and possible internal injuries.
- Exercise care when using hand tools and sharp instruments during assembly.
- Carefully read all manufacturers warnings and cautions for any additional items used in the construction.
- In line with our policy of continuous development the exact details of the kit may vary.
- DO NOT use this car on public roads or in places where it can interfere with traffic, people or animals.
- Always check the operation of the radio with the wheels off the ground, before using the car.
- Make sure the radio and car batteries are fully charged before use.
- Disconnect and remove the battery from the car when not in use.
- Always store and charge LiPo batteries in a fireproof container.
- DO NOT put fingers or any objects inside rotating or moving parts as this may cause injury.
- Make sure the charger is correctly set for the type of battery you are using. Incorrect charging may cause a fire.
- Insulate all exposed electrical wiring. Exposed or damaged wires can cause short circuits and fire.
- The motor and speed controller can become hot during use. DO NOT touch them immediately after using your car as this may cause injury.

Step 1

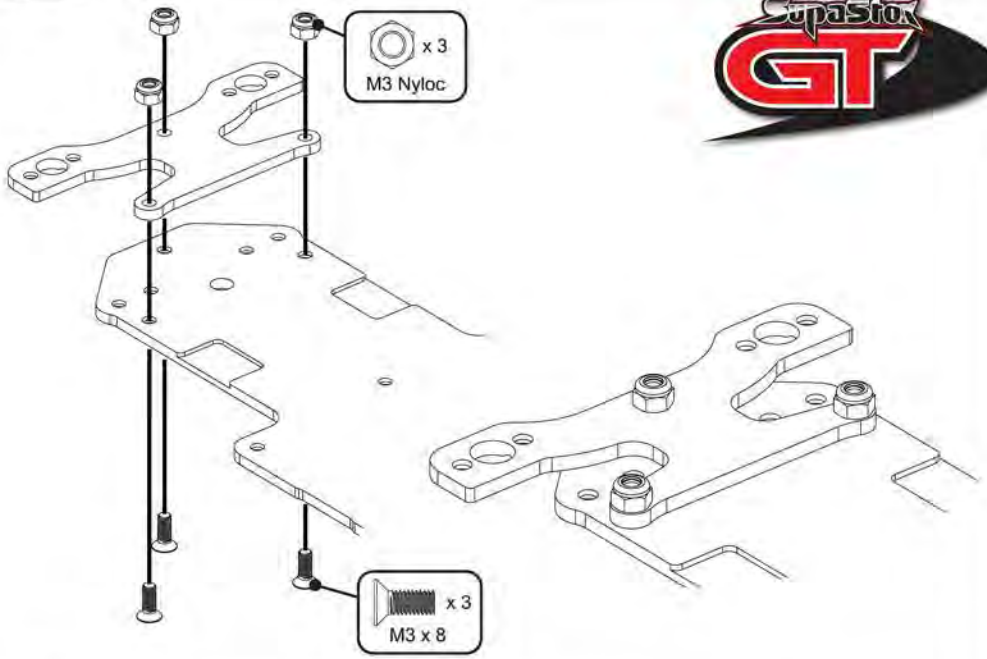

Step 2

A

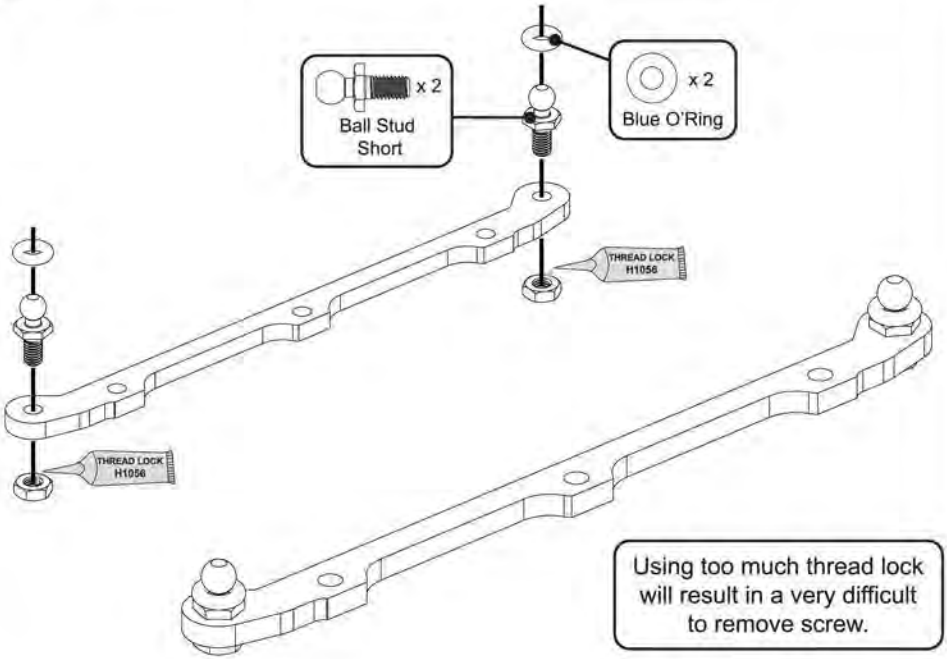

Using too much thread lock will result in a very difficult to remove screw.

B

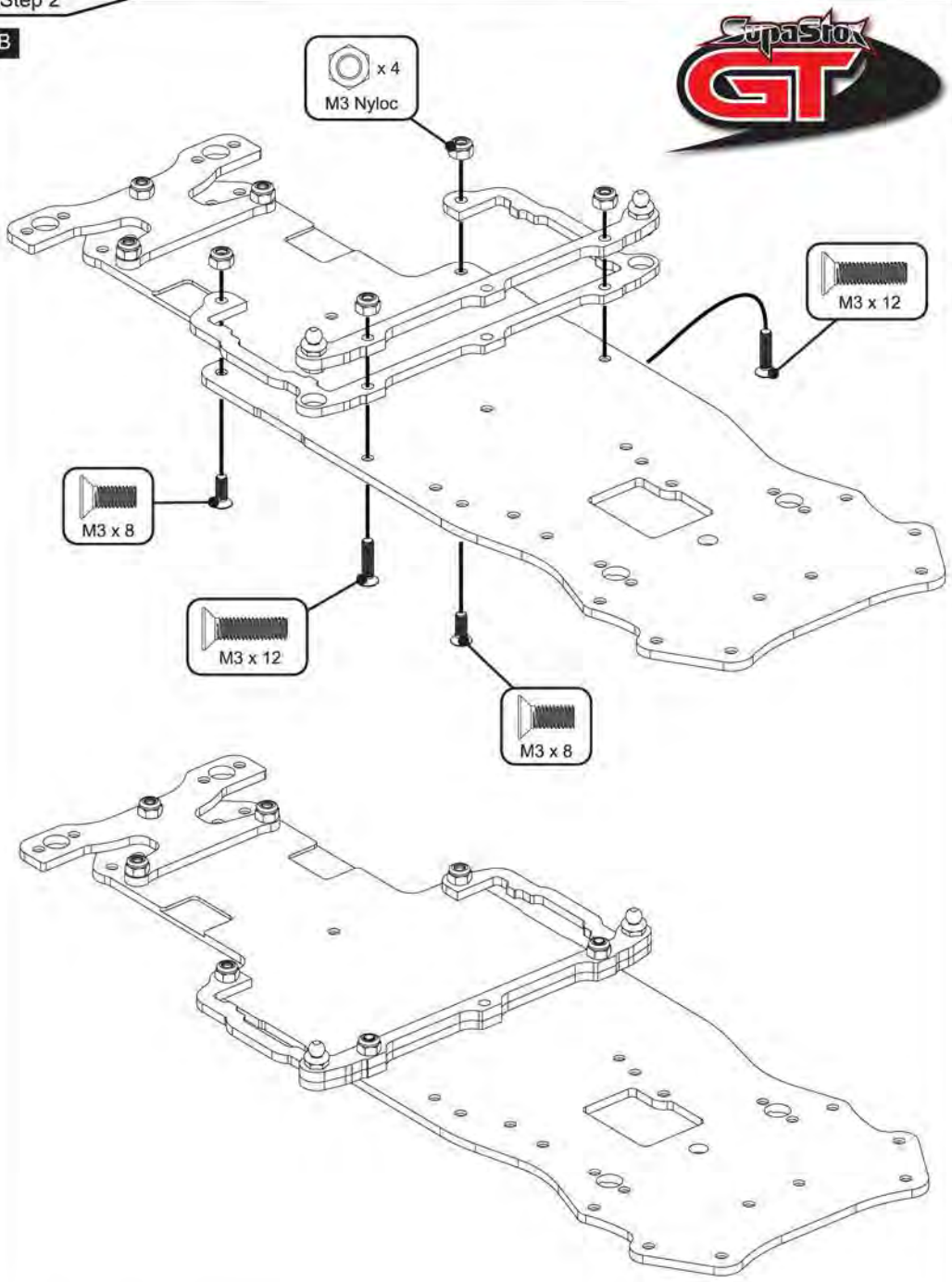

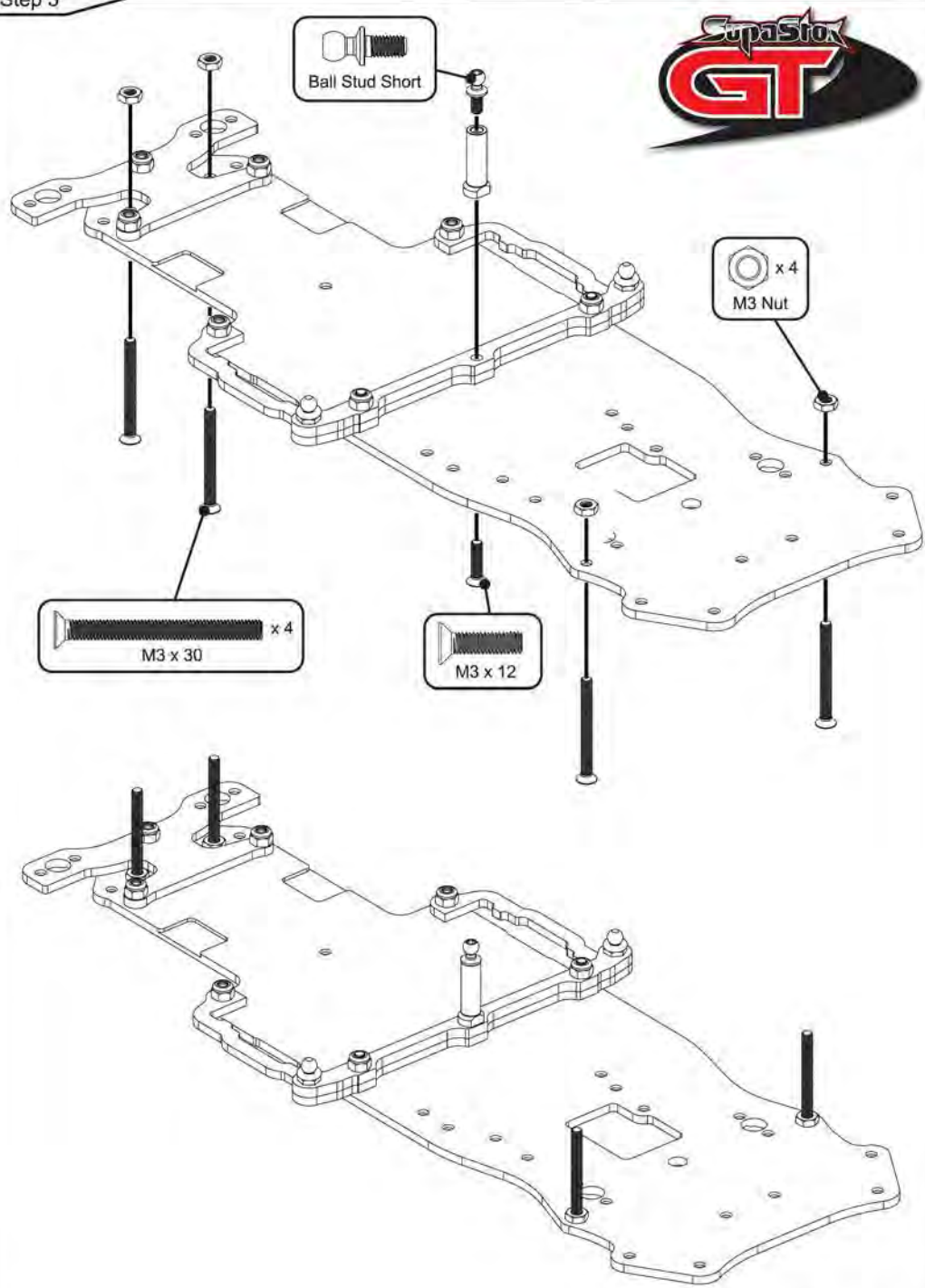
Ball Stud Short
x 4
M3 Nut
x 4
M3 x 30
M3 x 12

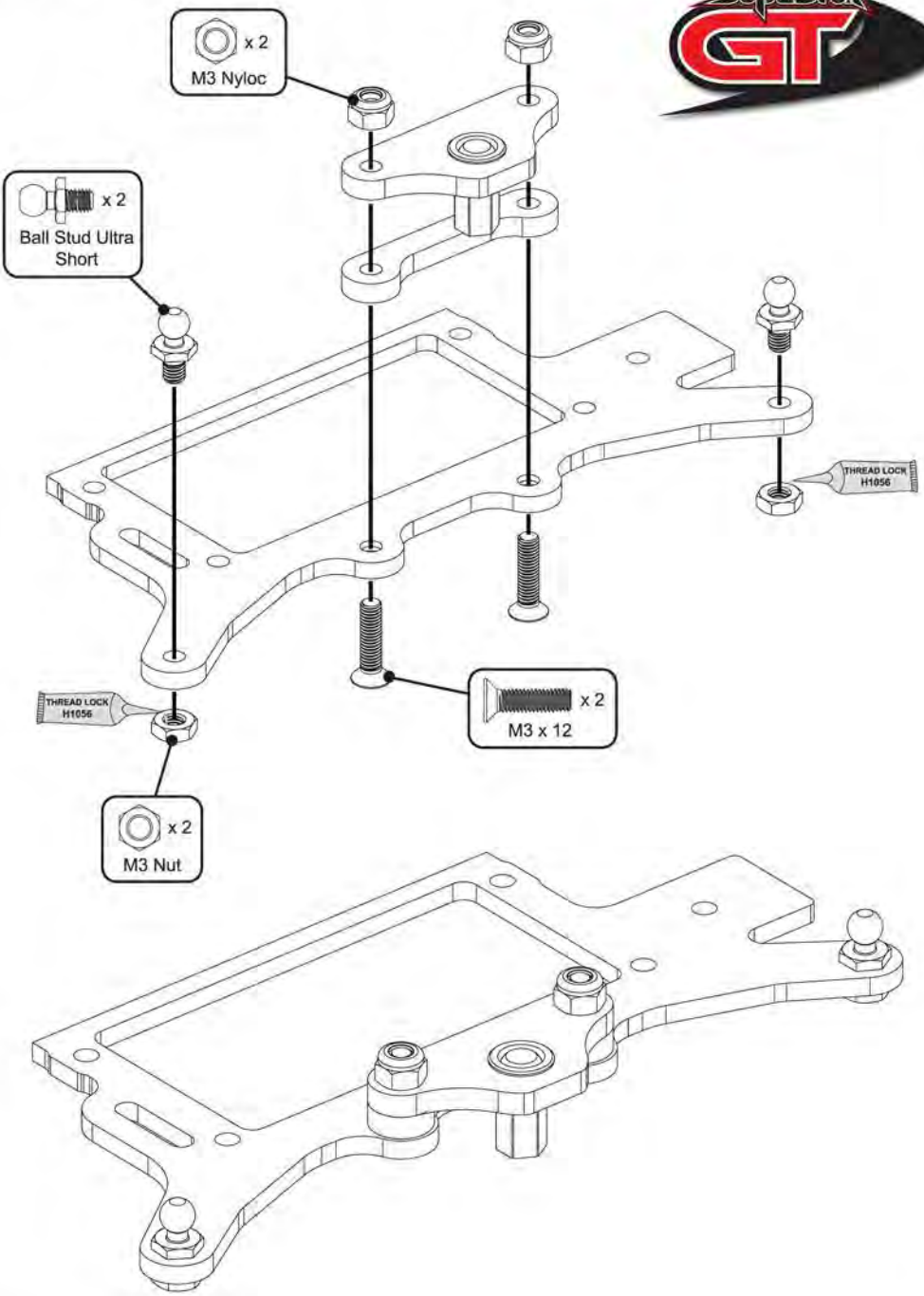
x 2
M3 Nyloc
x 2
Ball Stud Ultra Short
THREAD LOCK H1056
THREAD LOCK H1056
x 2
M3 x 12
x 2
M3 Nut

A

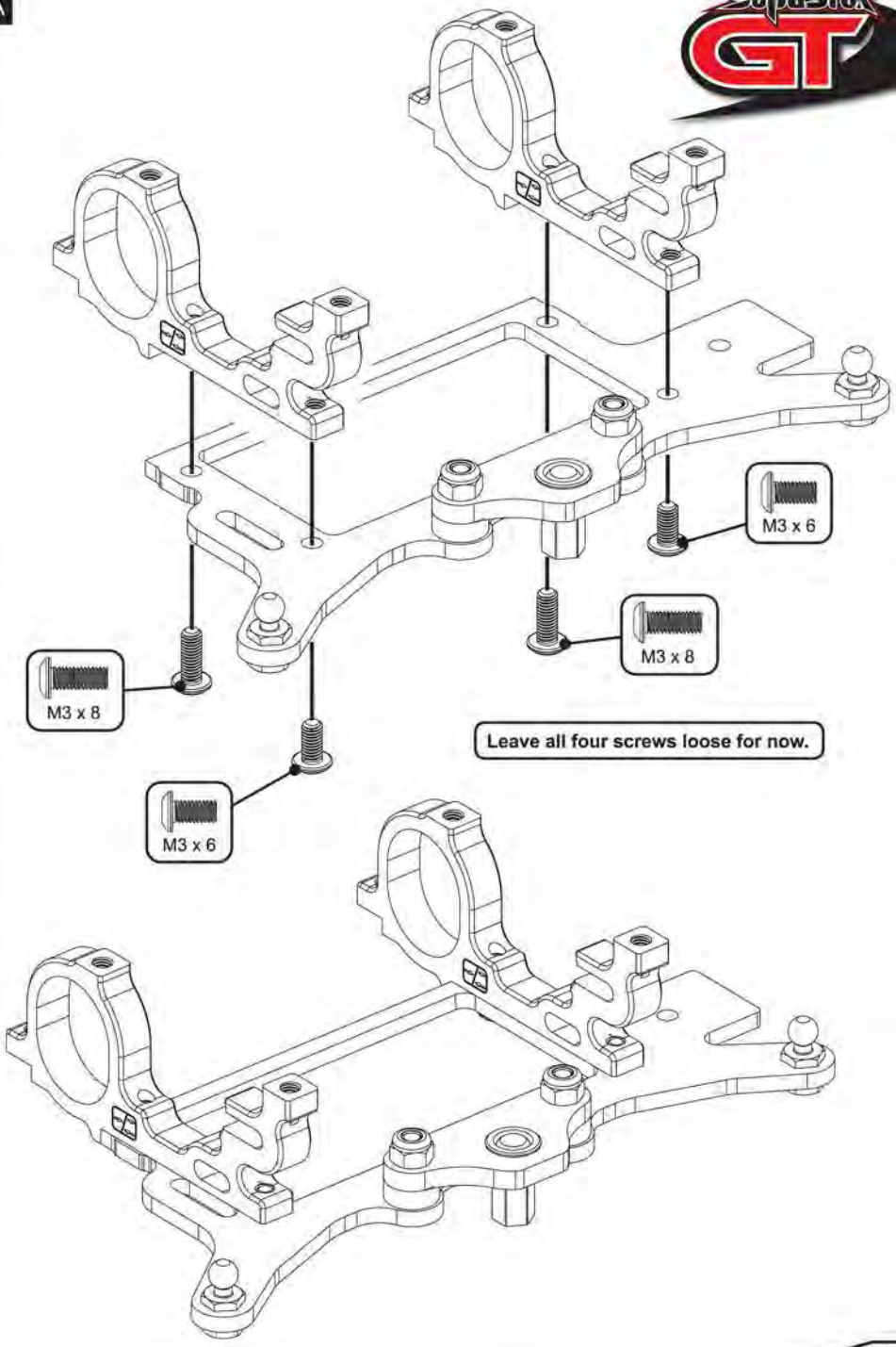

B

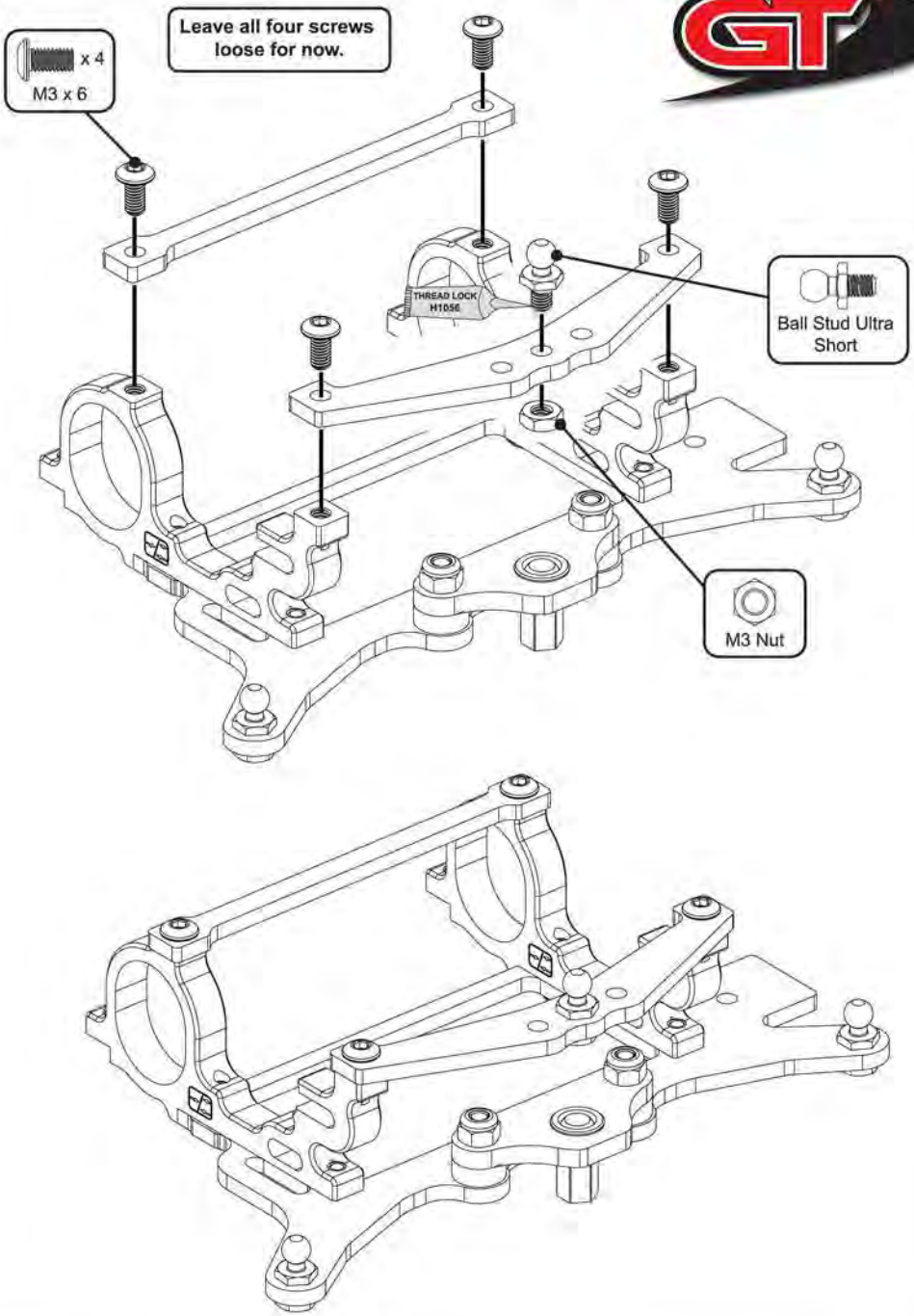
x 4
M3 x 6
Leave all four screws loose for now.
THREAD LOCK H105E
Ball Stud Ultra Short
M3 Nut

C

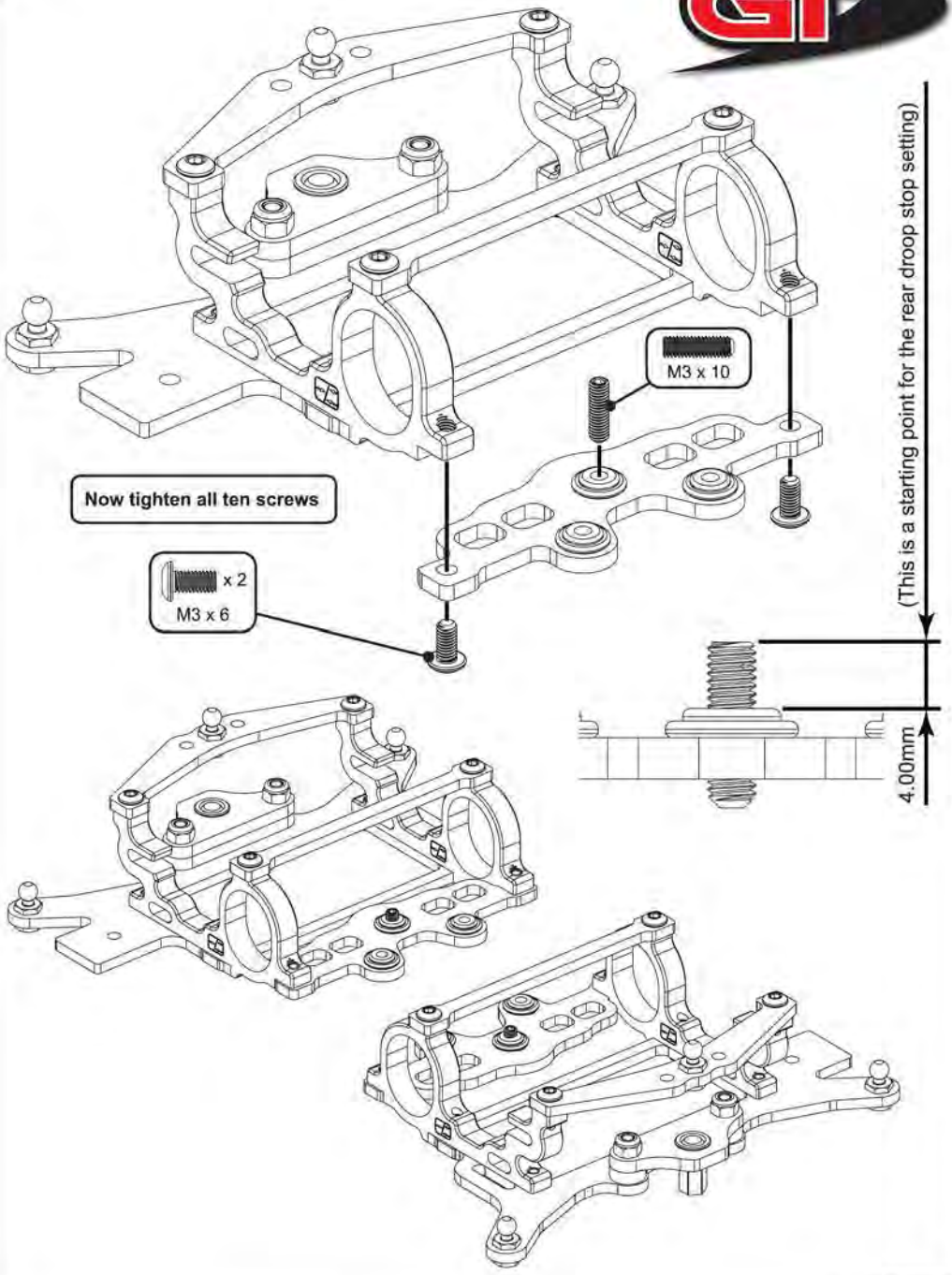
M3 x 10
Now tighten all ten screws
x 2
M3 x 6
(This is a starting point for the rear droop stop setting)
4.00mm

D

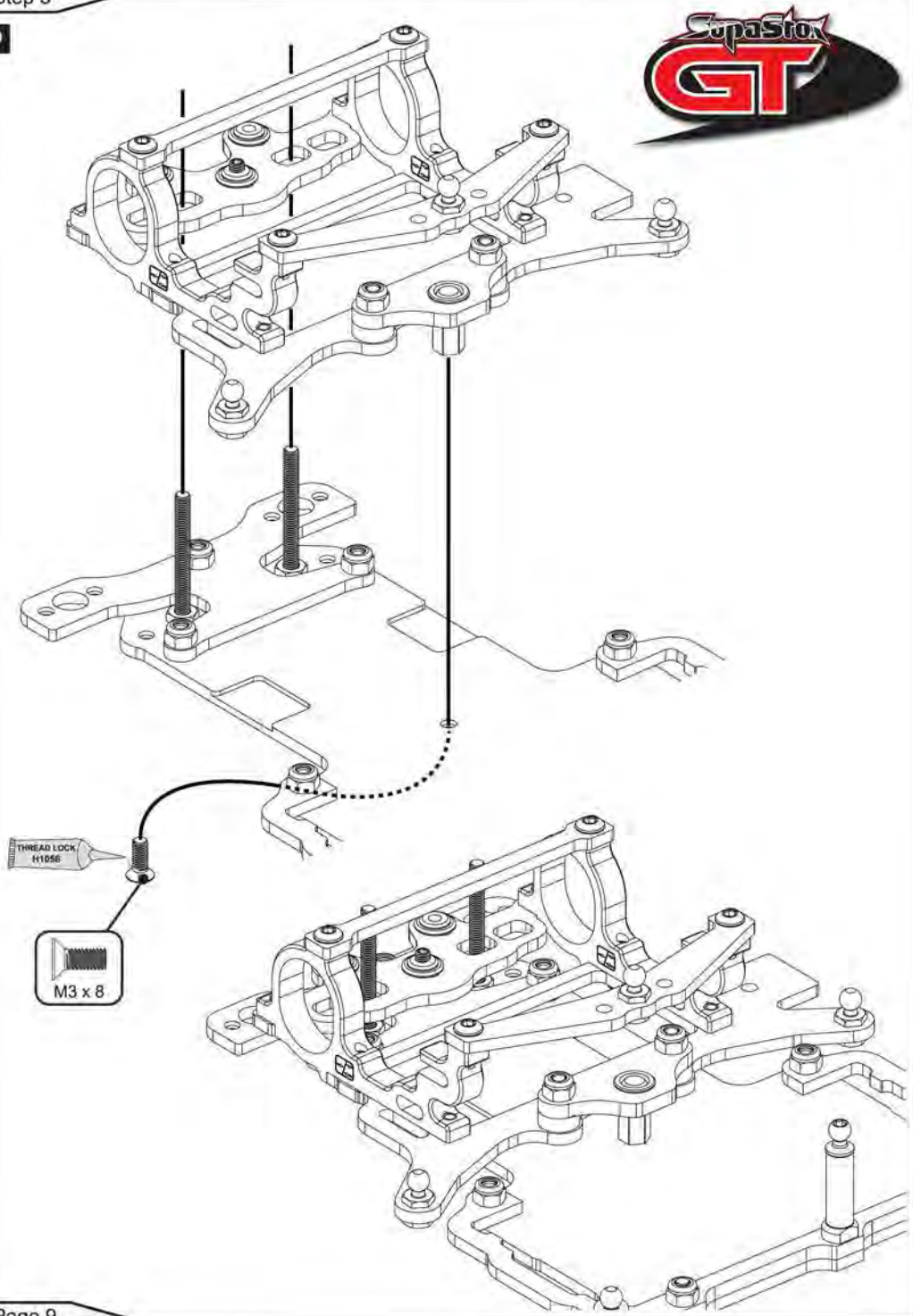

DAMPER OIL RANGE
CR222 CORE RC Silicone Oil - 10000cSt - 60ml
CR223 CORE RC Silicone Oil - 20000cSt - 60ml
CR229 CORE RC Silicone Oil - 12000cSt - 60ml
CR230 CORE RC Silicone Oil - 15000cSt - 60ml

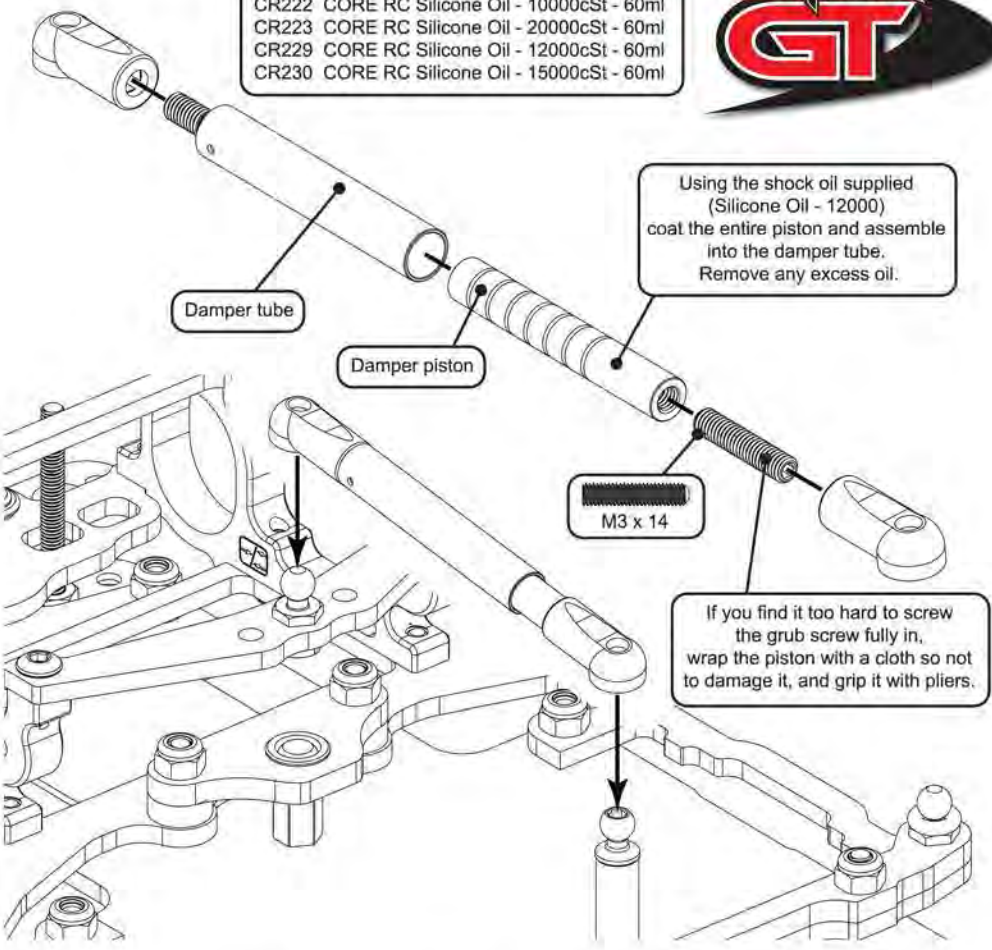

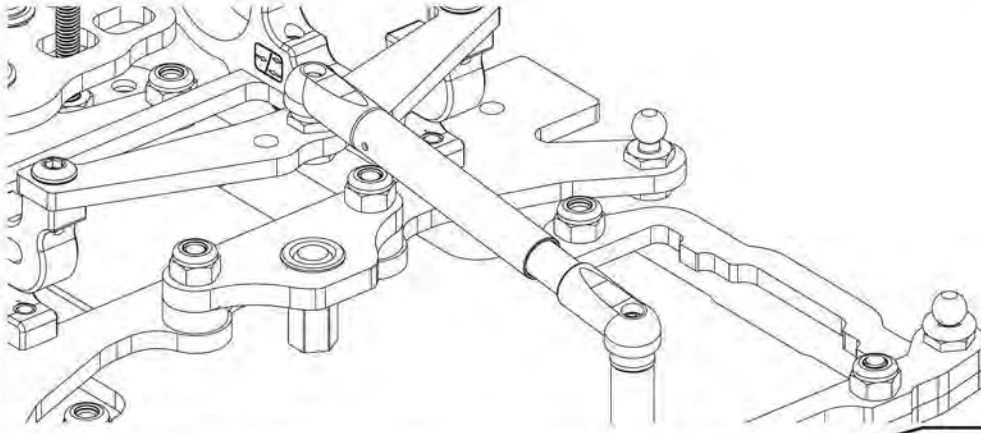

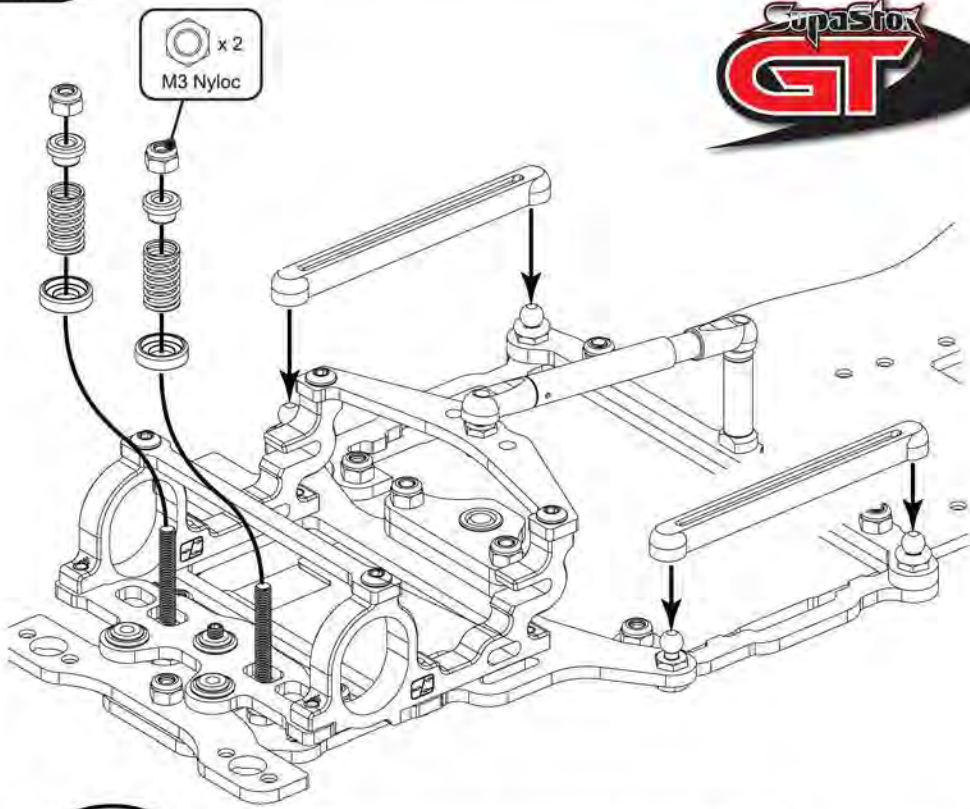
x 2
M3 Nyloc

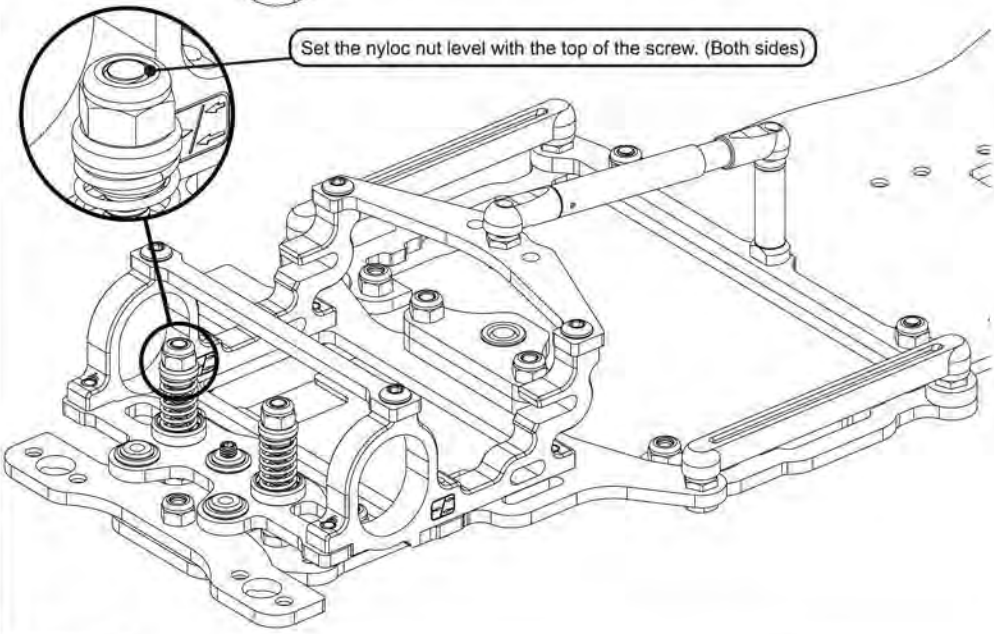
Set the nyloc nut level with the top of the screw. (Both sides)

Step 8

A

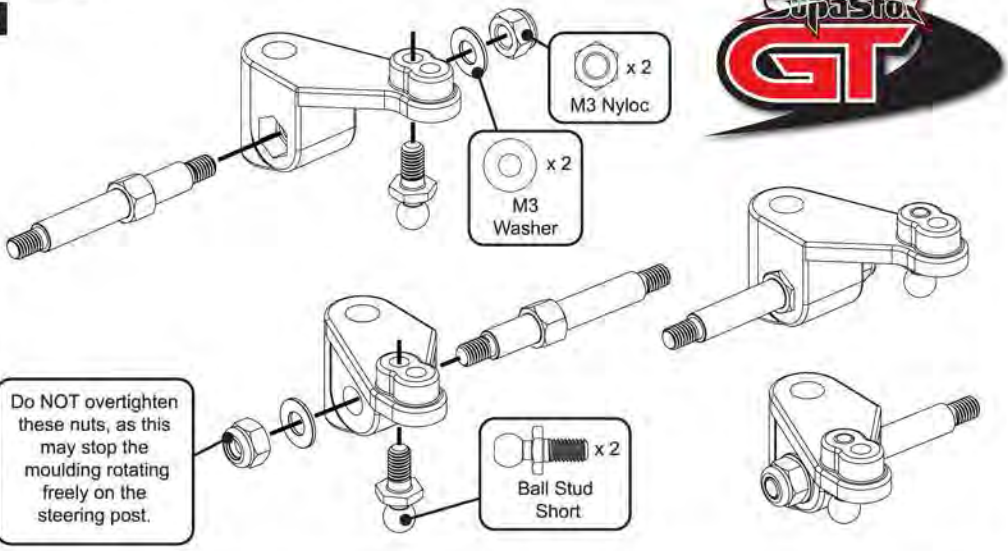

Step 8

B

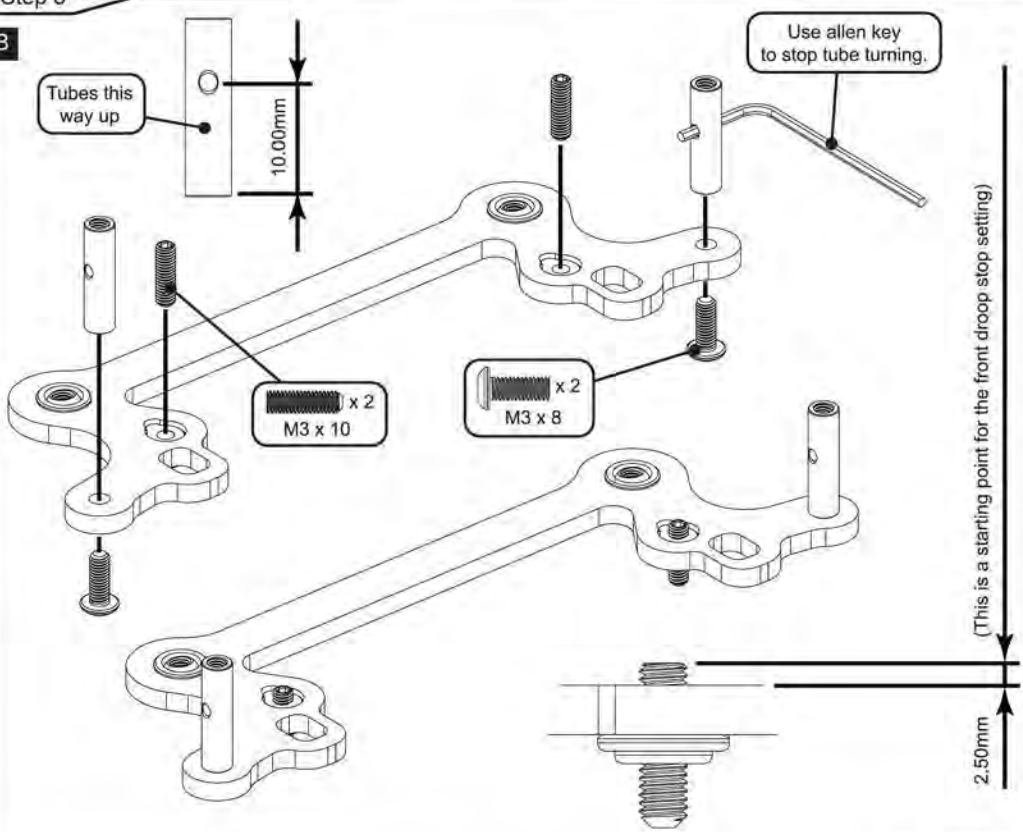

C

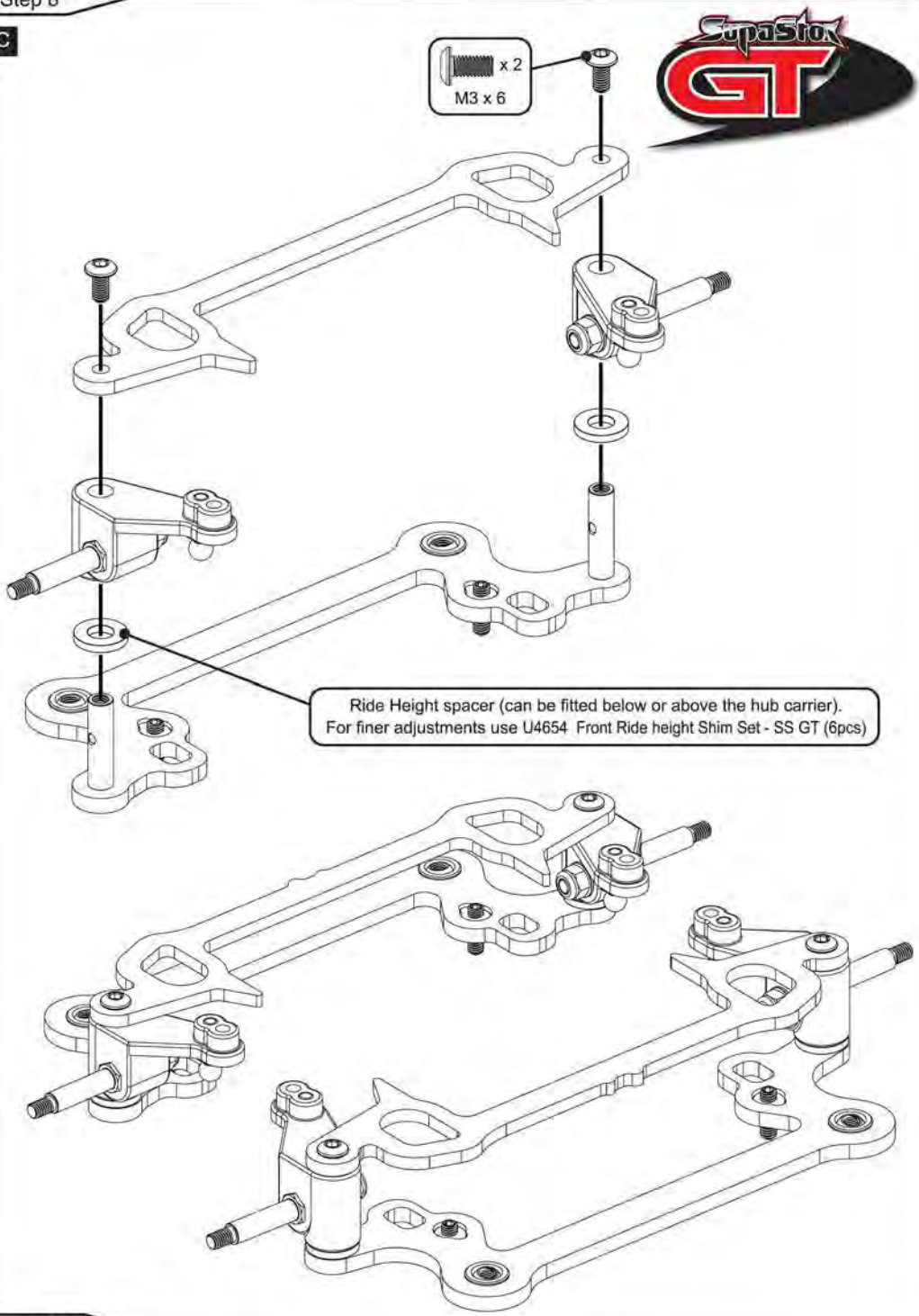
x 2
M3 x 6
Ride Height spacer (can be fitted below or above the hub carrier).
For finer adjustments use U4654 Front Ride height Shim Set - SS GT (6pcs)

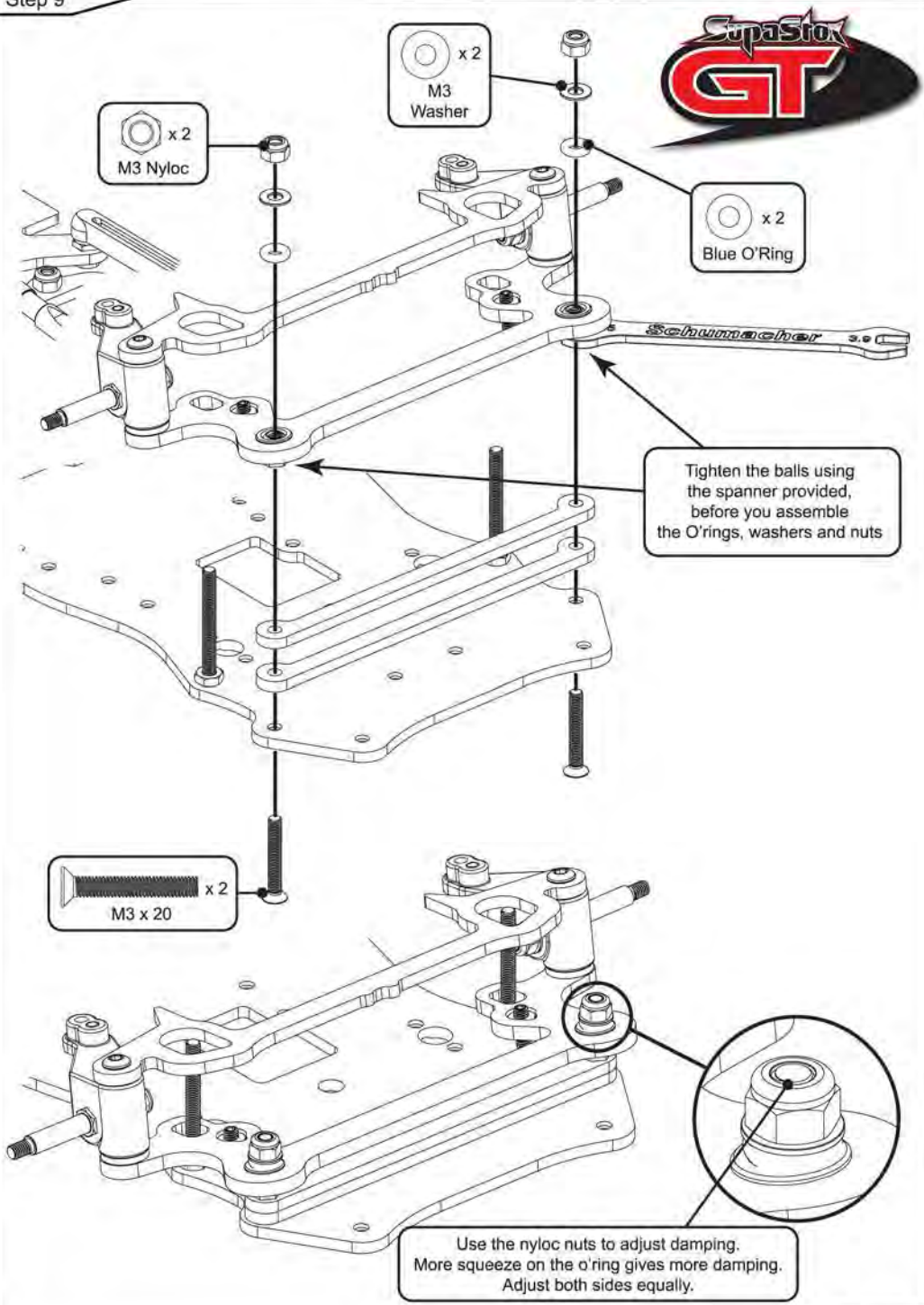
x 2
M3
Washer
x 2
M3 Nyloc
x 2
Blue O'Ring
Schumacher
Tighten the balls using
the spanner provided,
before you assemble
the O'rings, washers and nuts
x 2
M3 x 20
Use the nyloc nuts to adjust damping.
More squeeze on the o'ring gives more damping.
Adjust both sides equally.

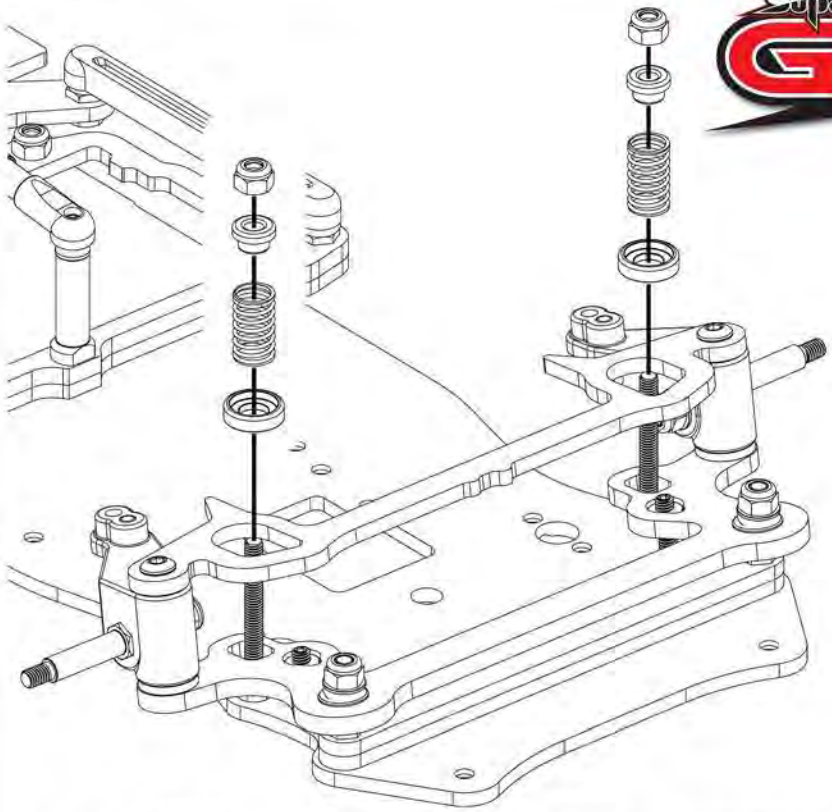

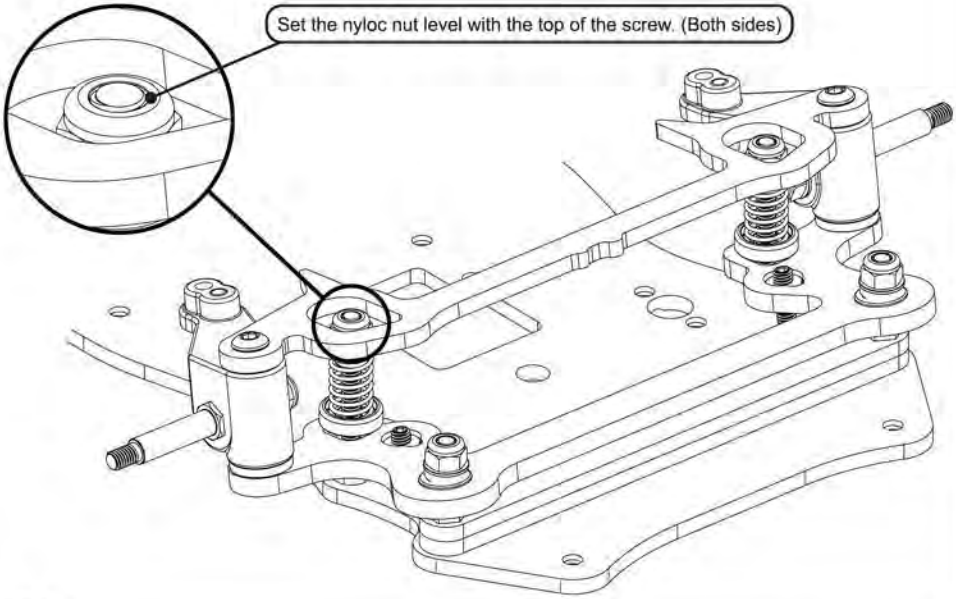
Set the nyloc nut level with the top of the screw. (Both sides)

Step 11

A

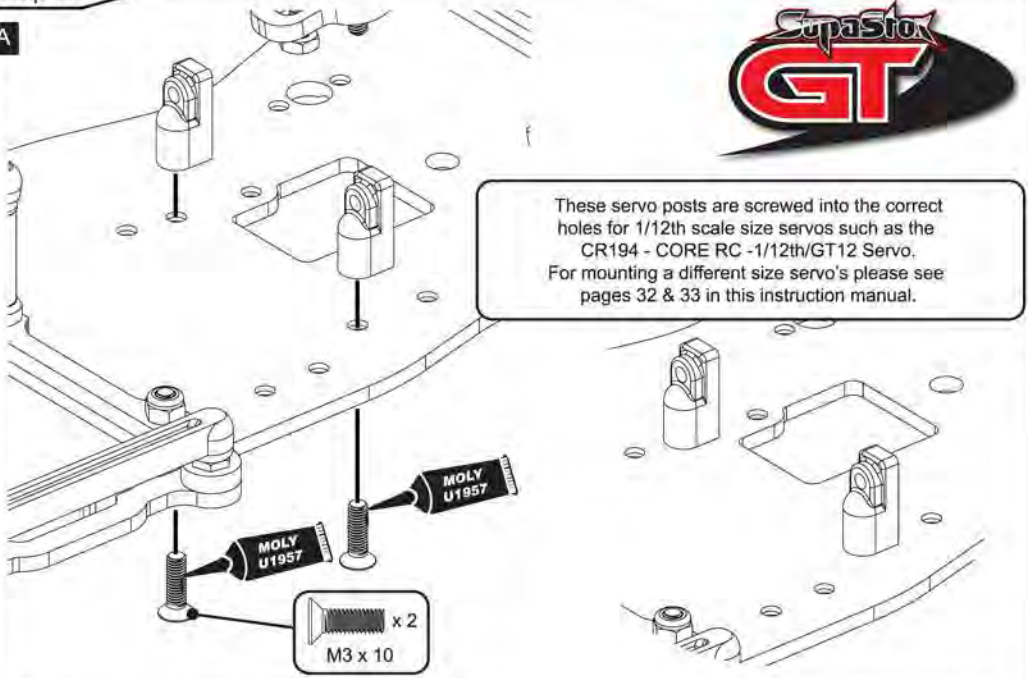

These servo posts are screwed into the correct holes for 1/12th scale size servos such as the CR194 - CORE RC -1/12th/GT12 Servo.
For mounting a different size servo's please see pages 32 & 33 in this instruction manual.

Step 11

B

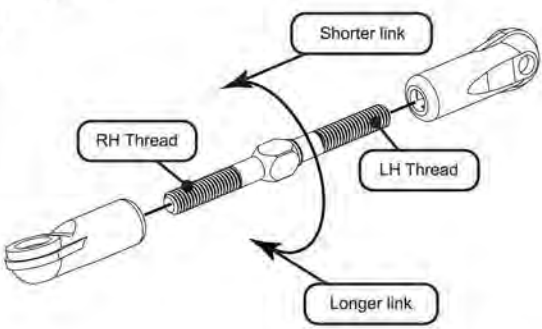

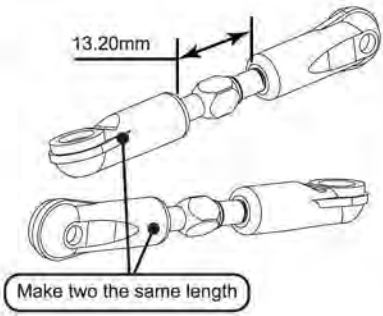

Carefully screw the sockets onto the turnbuckle until no threads are visible.
Then undo them to the desired length.
This allows for easier adjustment on the car.
(Greasing the threads will also help)

Note the shape of the turnbuckle. This side of the turnbuckle is the left hand thread.

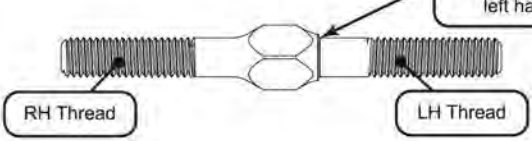

C

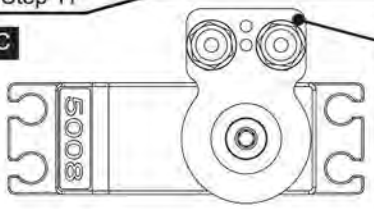

Connect up your radio gear and set the servo to neutral before fitting the servo saver assembly as shown.

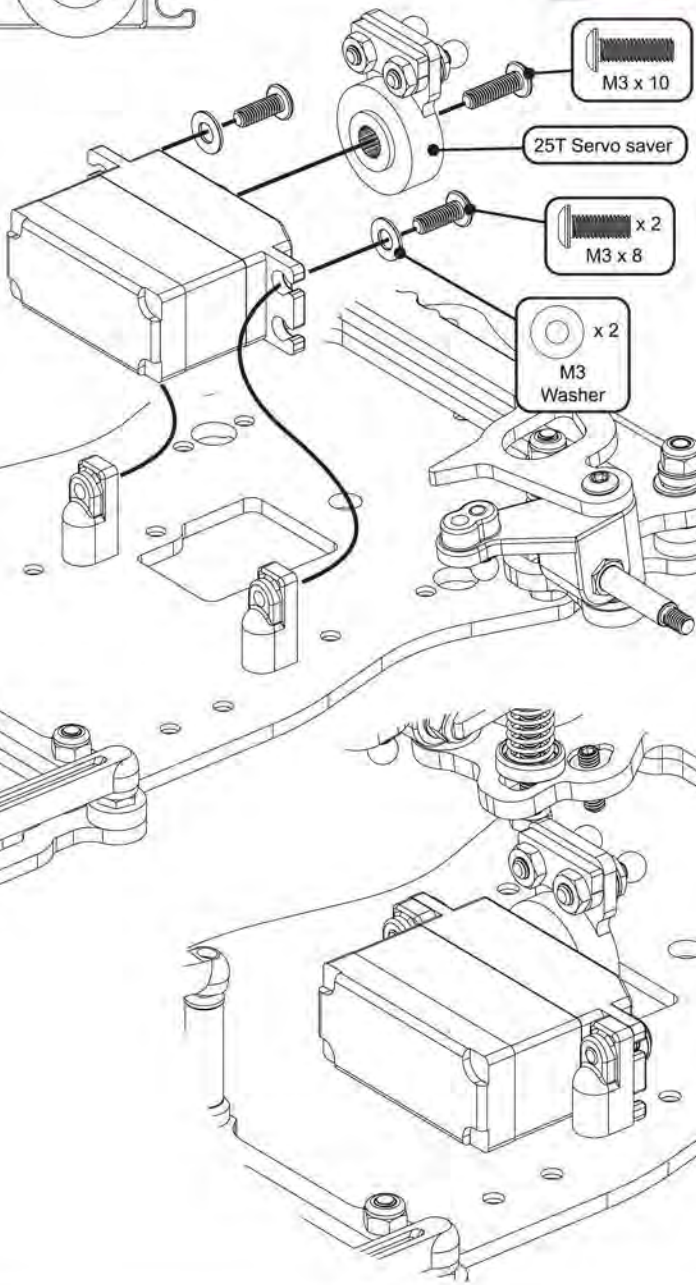

D

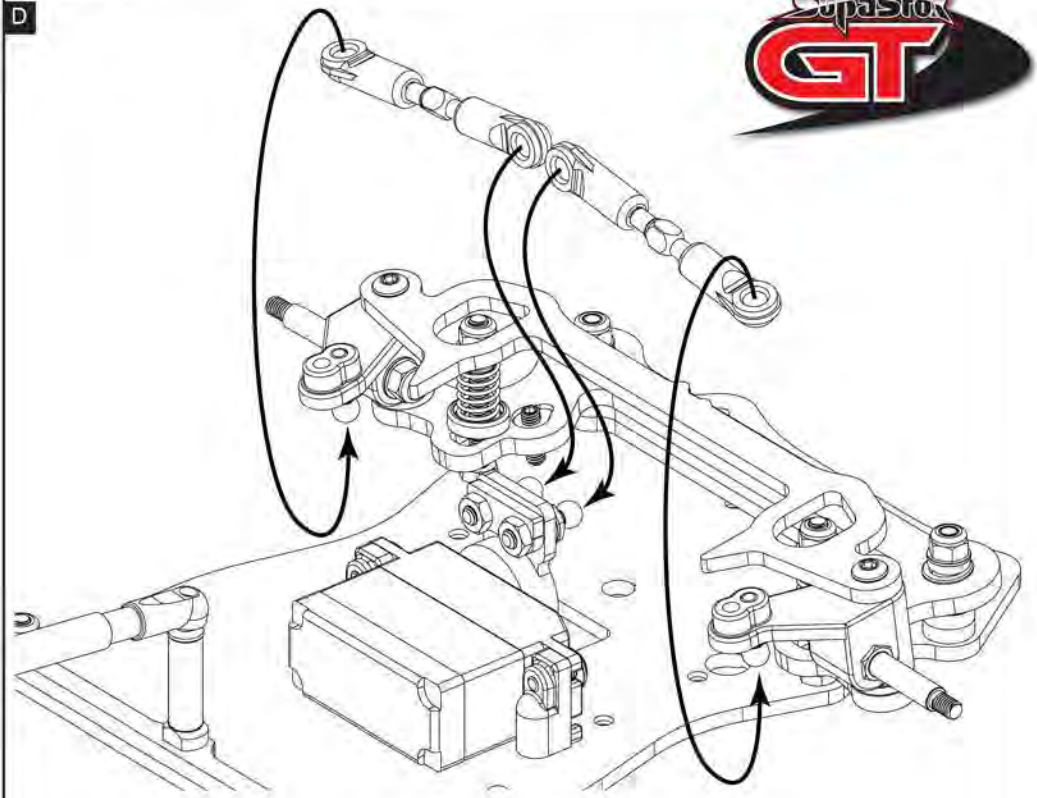

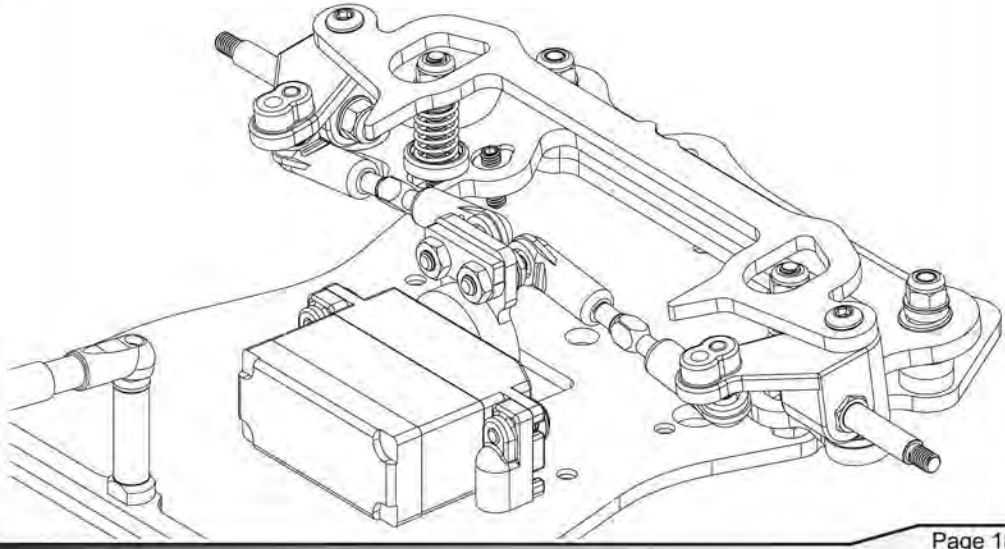

Step 12

A

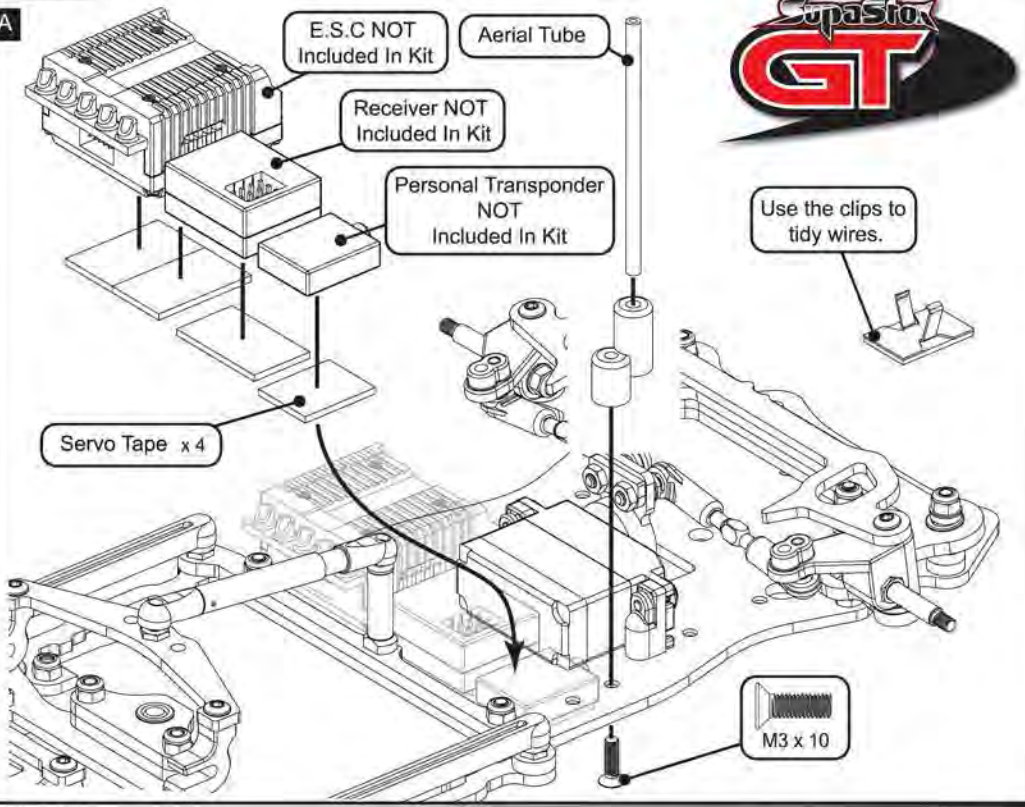

Step 12

B

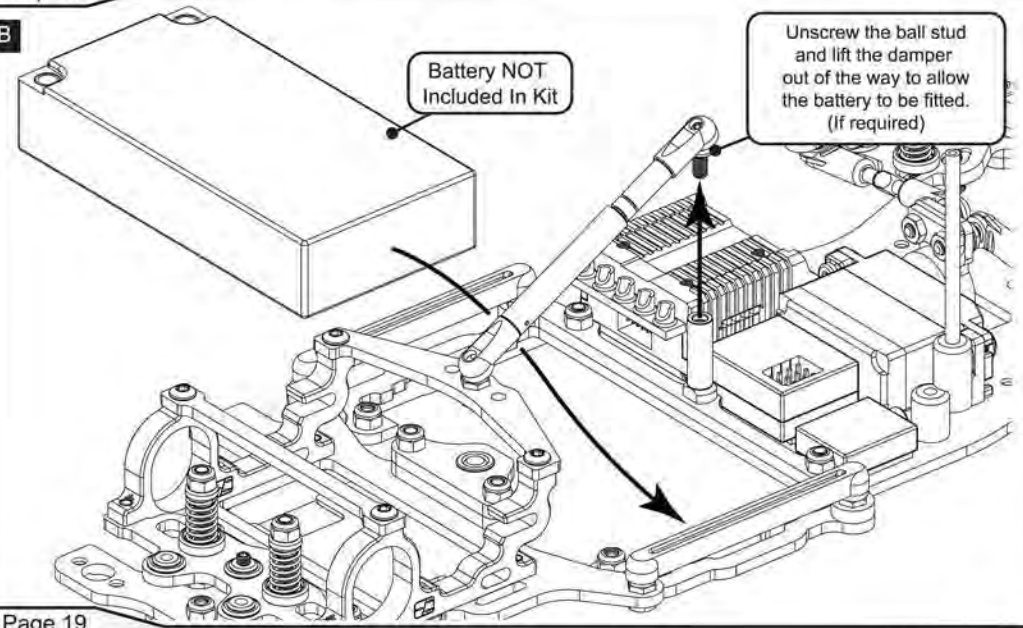

C

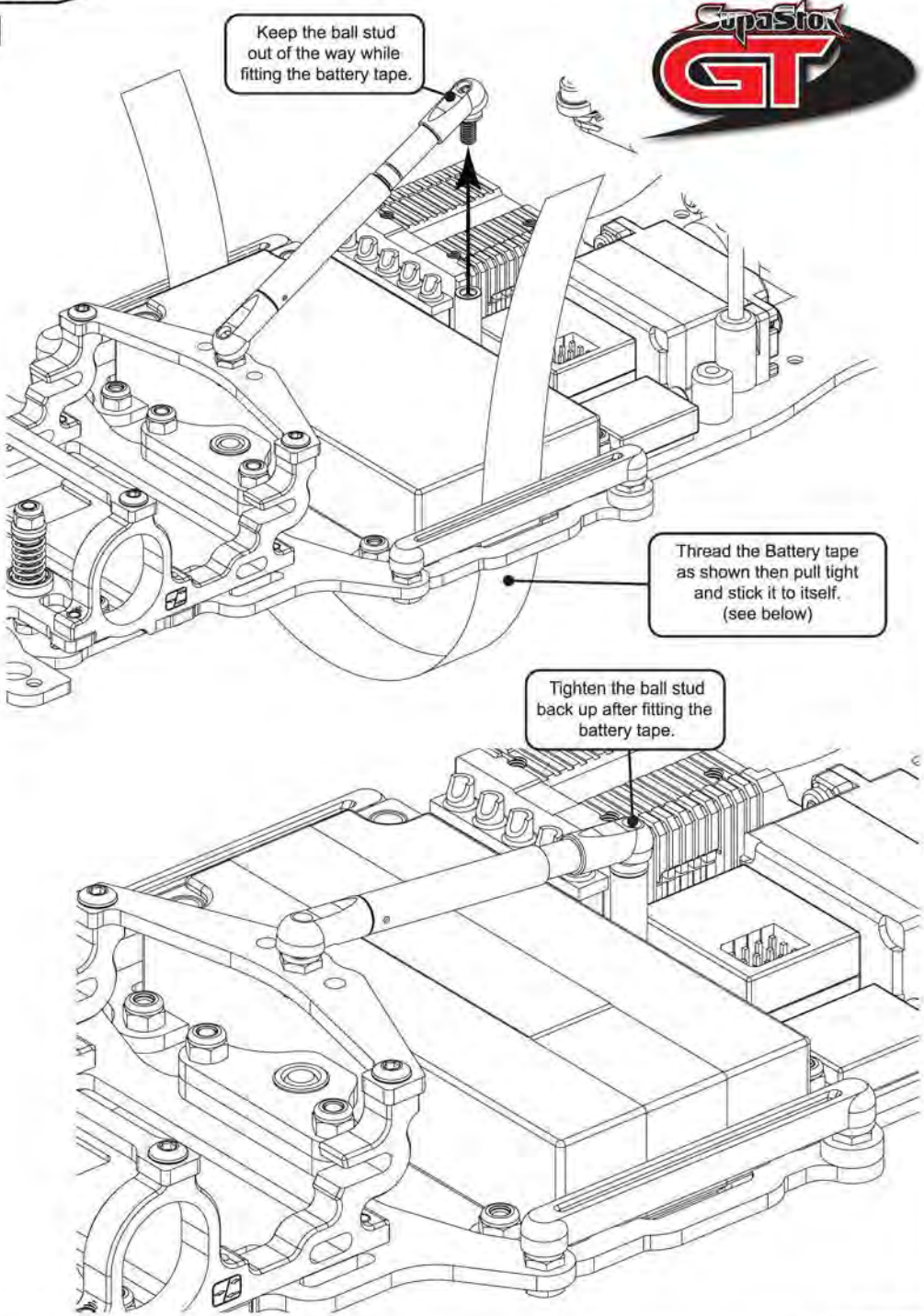
Keep the ball stud out of the way while fitting the battery tape.
Thread the Battery tape as shown then pull tight and stick it to itself. (see below)
Tighten the ball stud back up after fitting the battery tape.

D

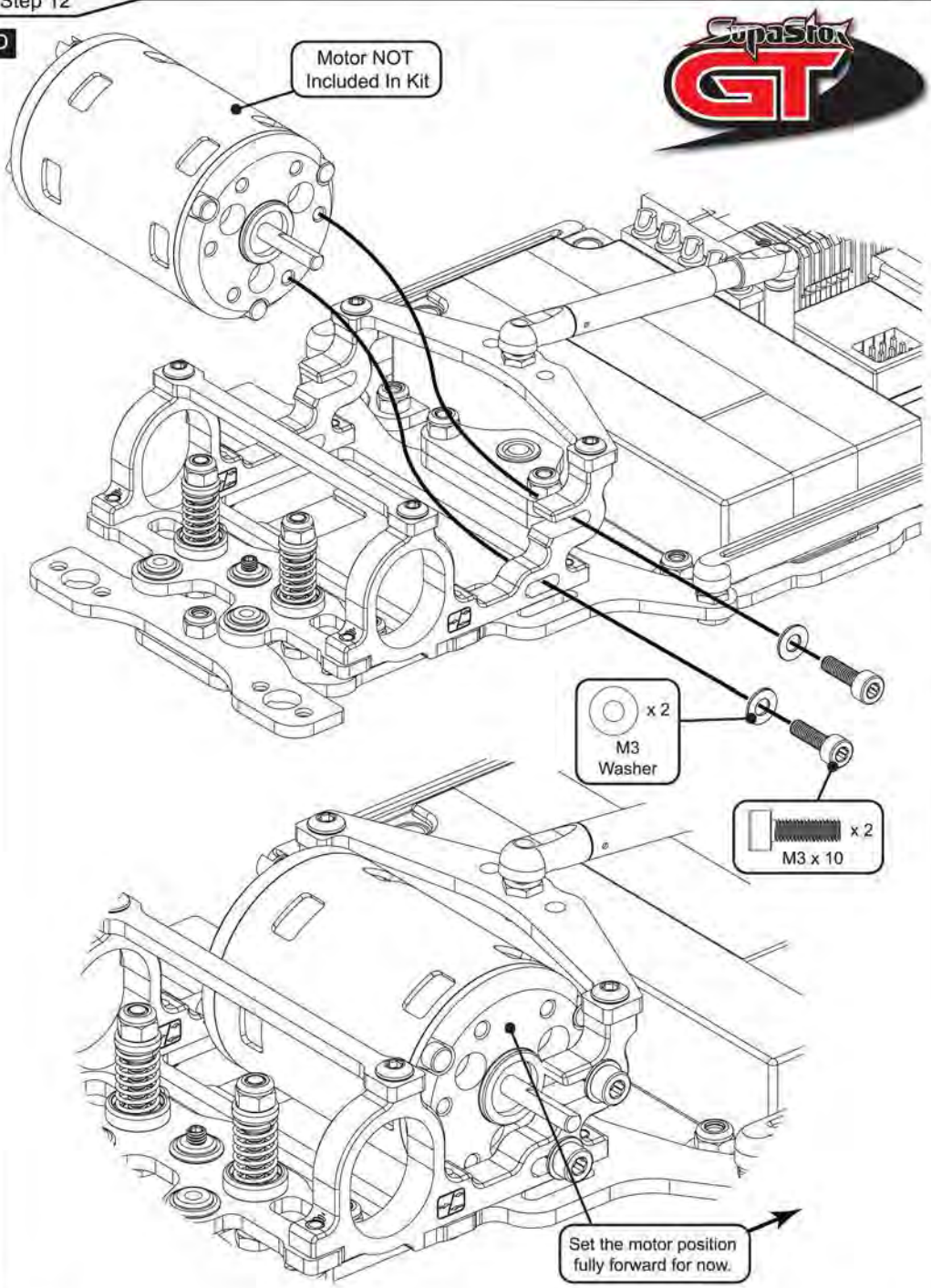
Motor NOT
Included In Kit
x 2
M3
Washer
x 2
M3 x 10
Set the motor position
fully forward for now.

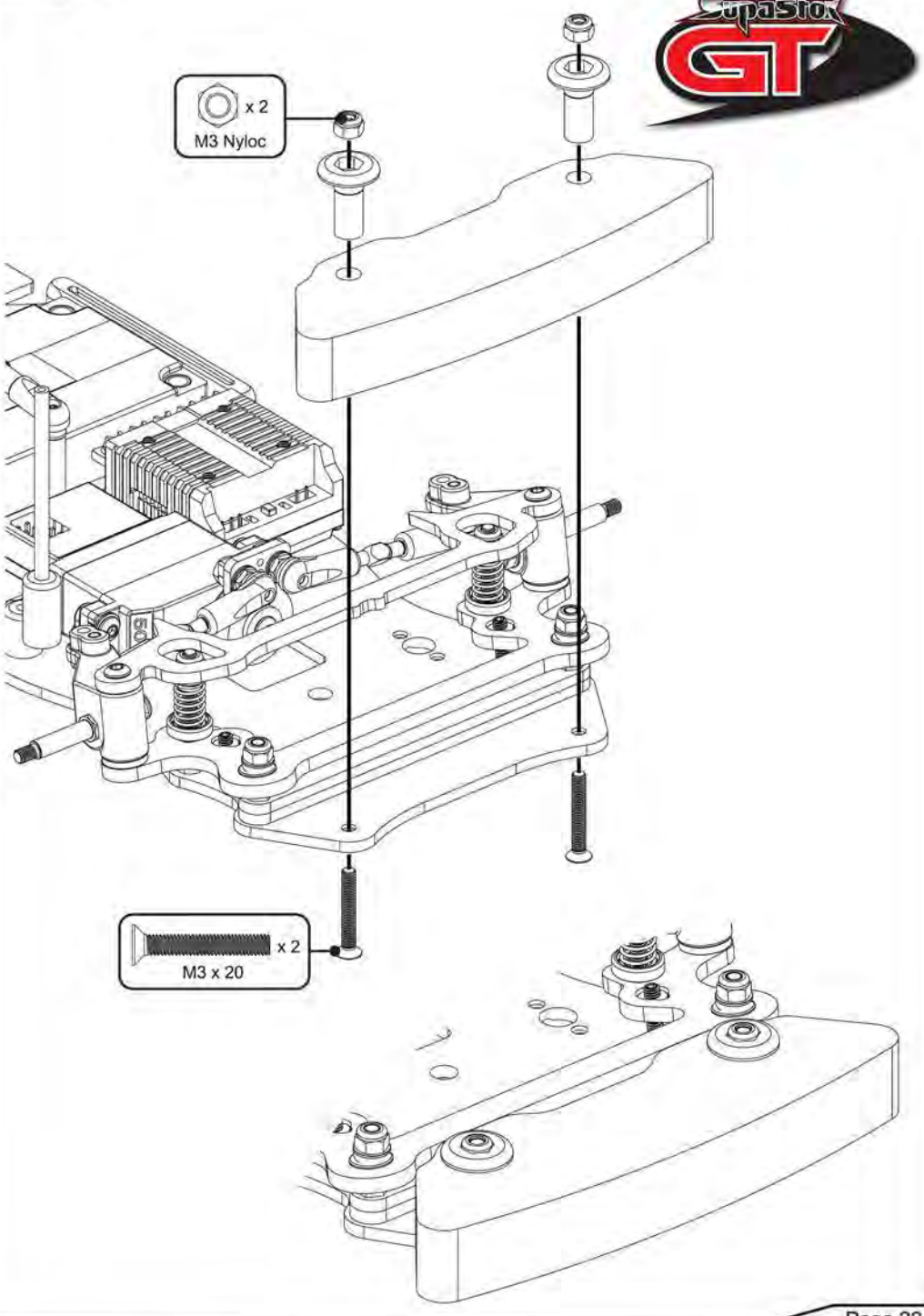
x 2
M3 Nyloc
x 2
M3 x 20

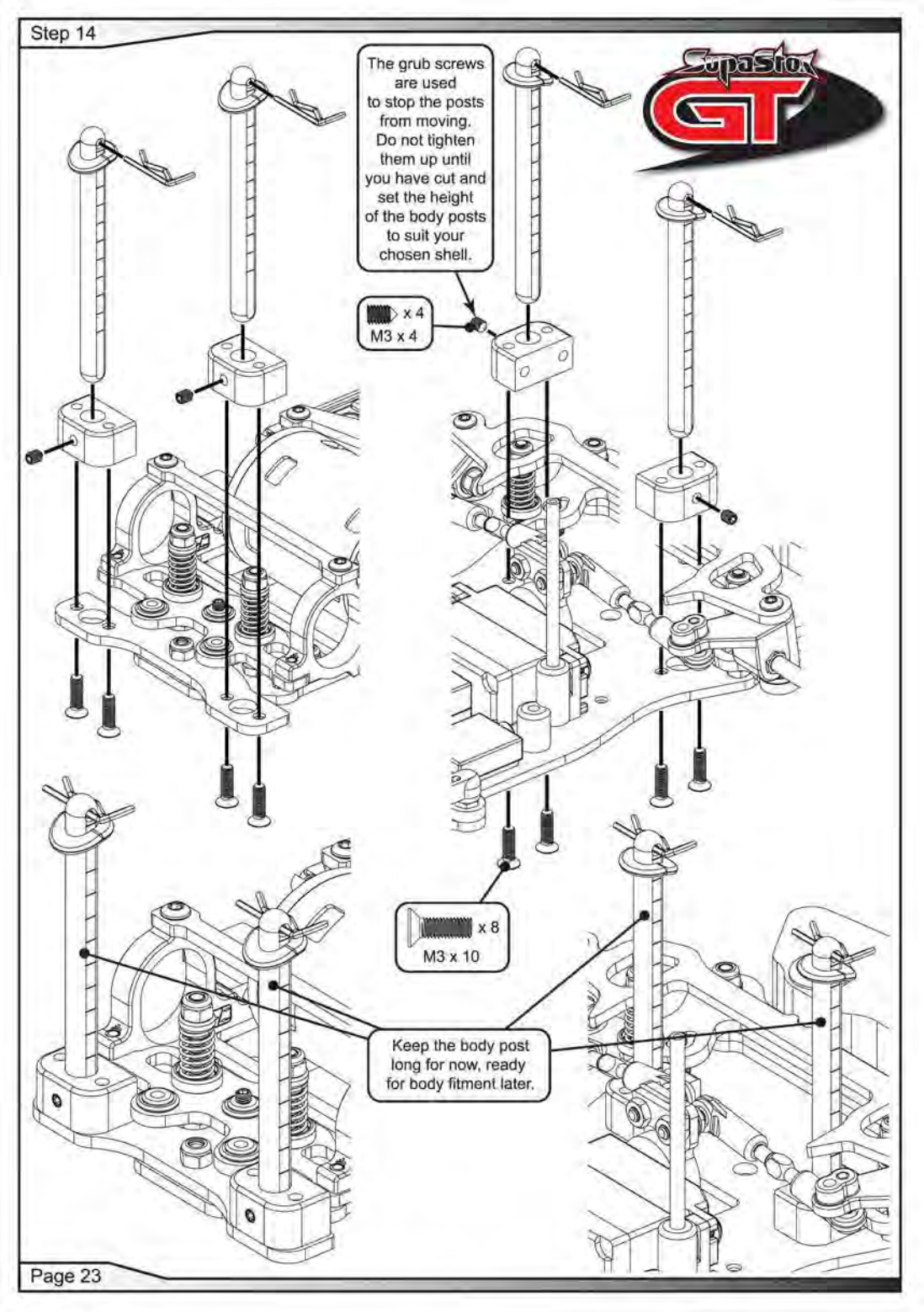
The grub screws are used to stop the posts from moving. Do not tighten them up until you have cut and set the height of the body posts to suit your chosen shell.
x 4
M3 x 4
x 8
M3 x 10
Keep the body post long for now, ready for body fitment later.

Depending on which Supastox GT kit you purchased, S1 or Carbon, the way you build the kit changes at Step15.
If you have purchased the S1 Supastox GT then please continue with this page of the manual.
If you have purchased the Carbon Supastox GT then please turn to page 29 to continue with the kit build.

Step 15

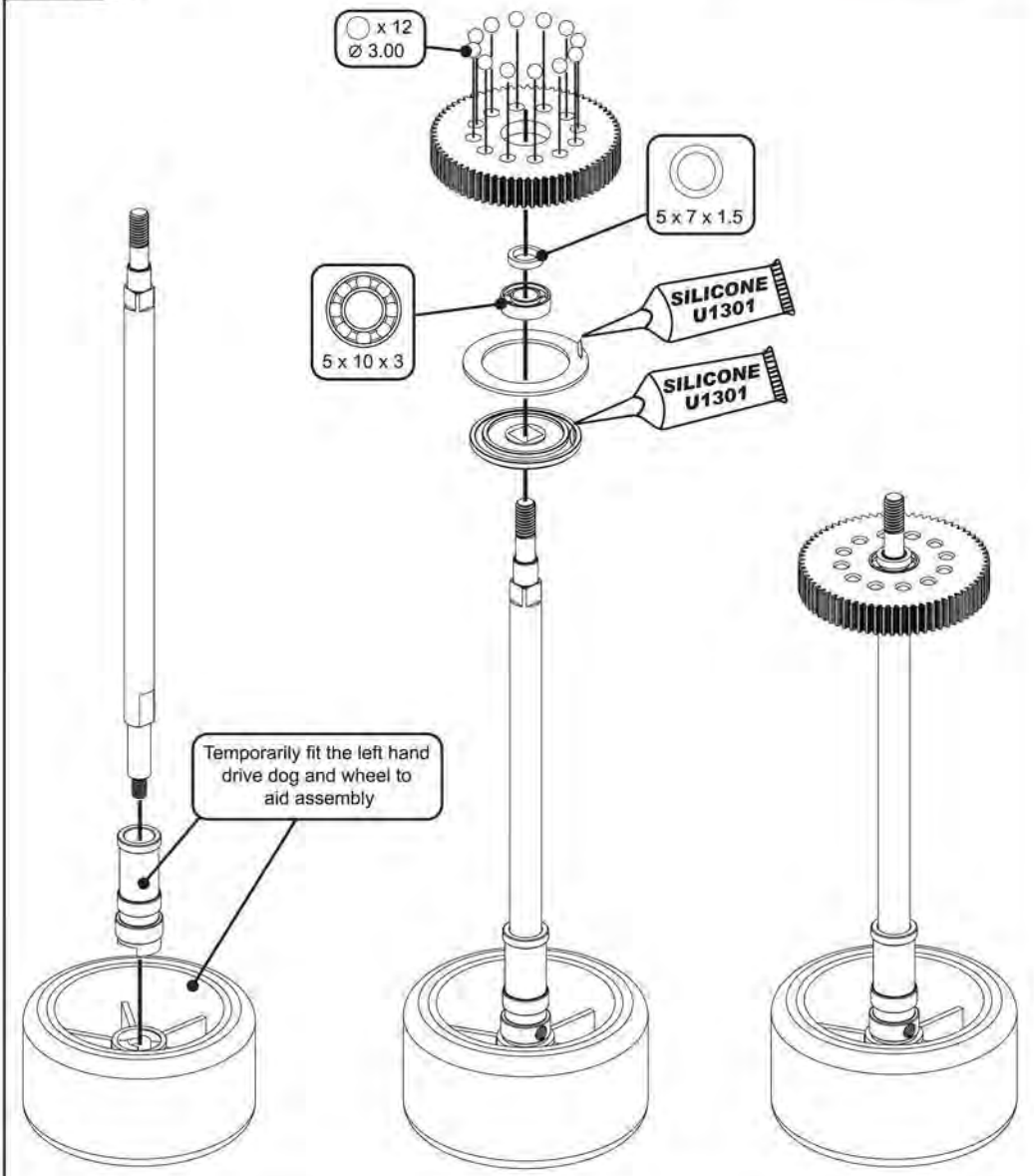

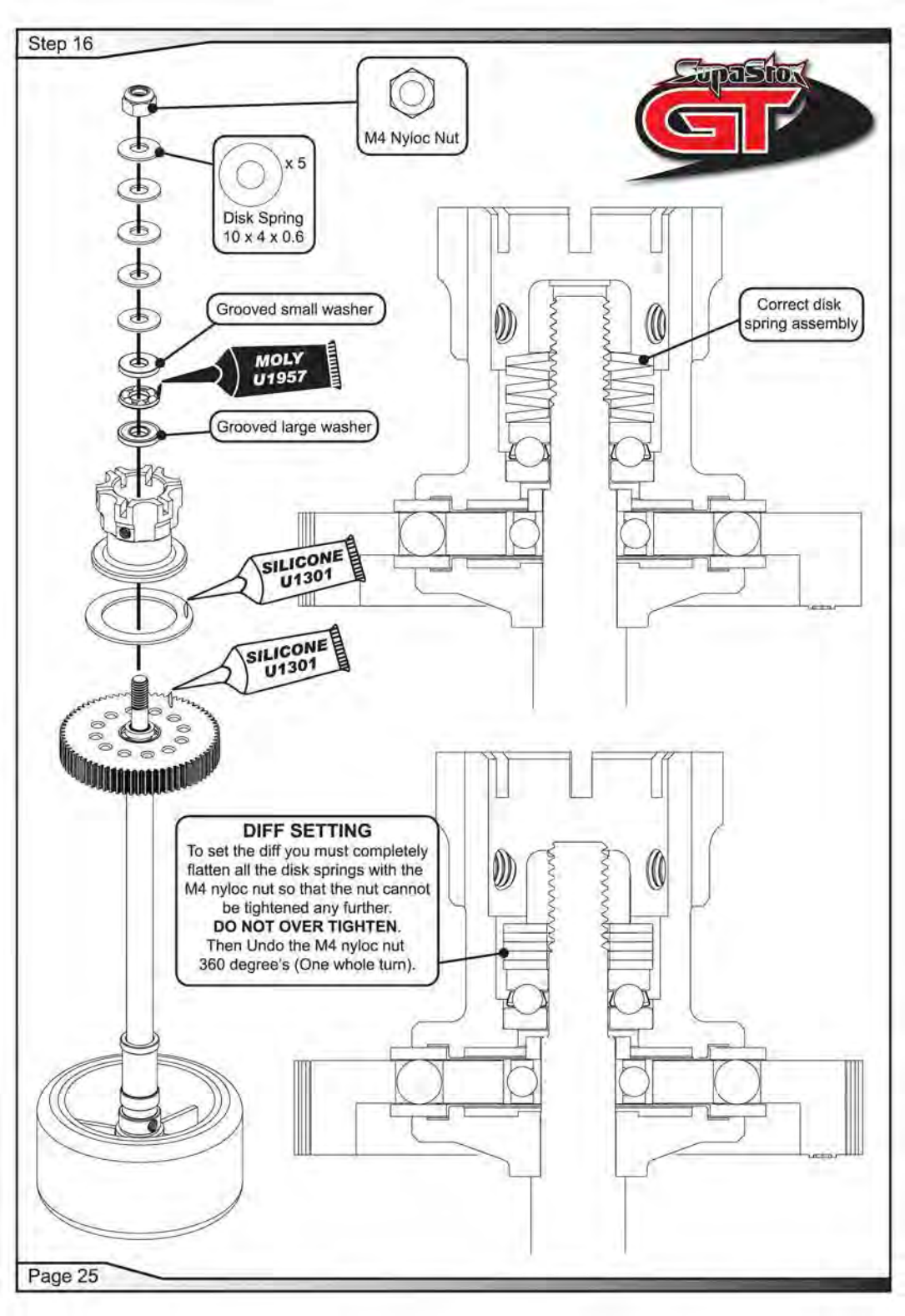
M4 Nyloc Nut
x 5
Disk Spring
10 x 4 x 0.6
Grooved small washer
MOLY
U1957
Grooved large washer
SILICONE
U1301
SILICONE
U1301
Correct disk
spring assembly
DIFF SETTING
To set the diff you must completely flatten all the disk springs with the M4 nyloc nut so that the nut cannot be tightened any further.
DO NOT OVER TIGHTEN.
Then Undo the M4 nyloc nut 360 degree's (One whole turn).

A

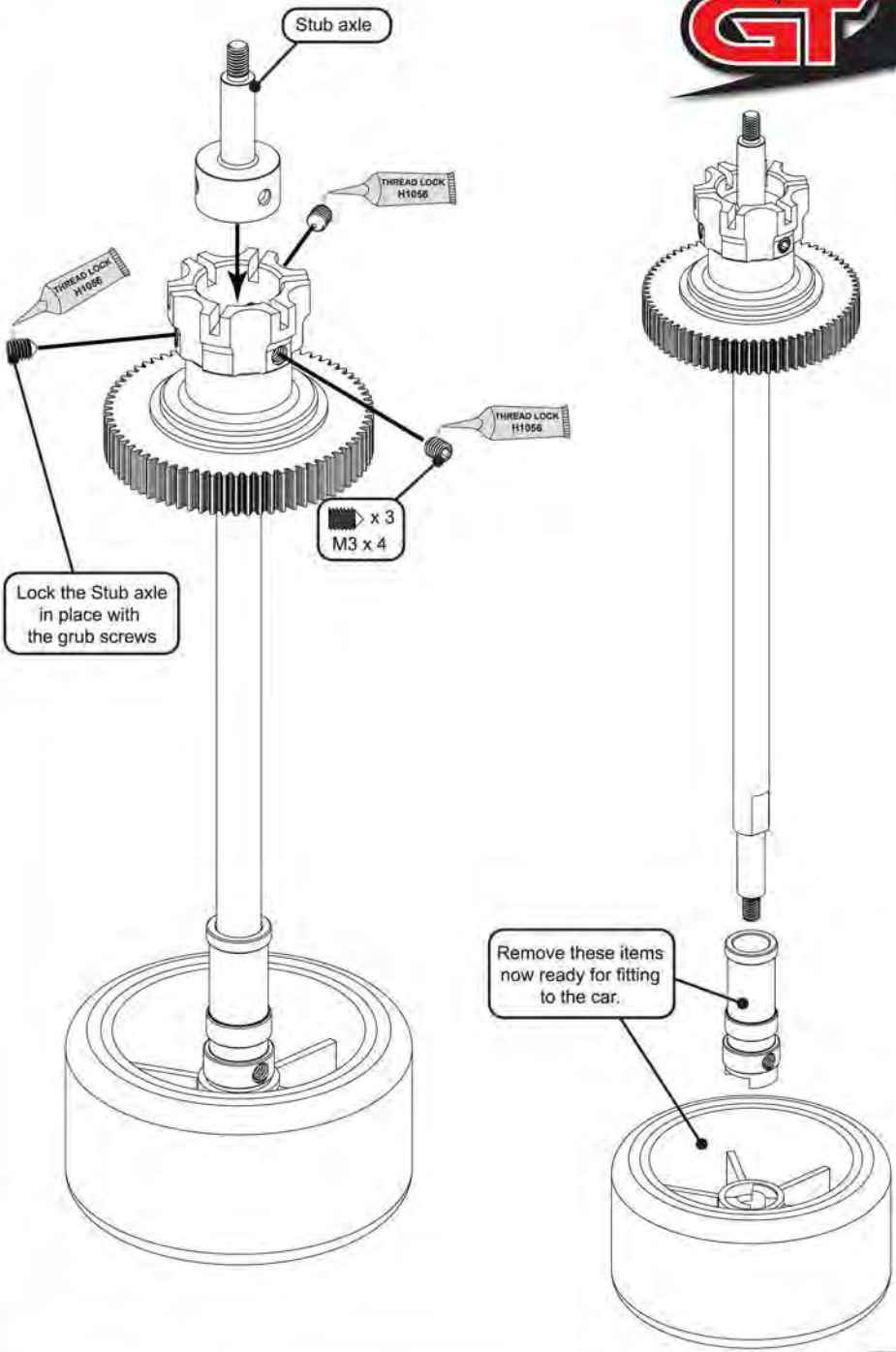
Stub axle
THREAD LOCK H1056
THREAD LOCK H1056
THREAD LOCK H1056
x 3
M3 x 4
Lock the Stub axle in place with the grub screws
Remove these items now ready for fitting to the car.

B

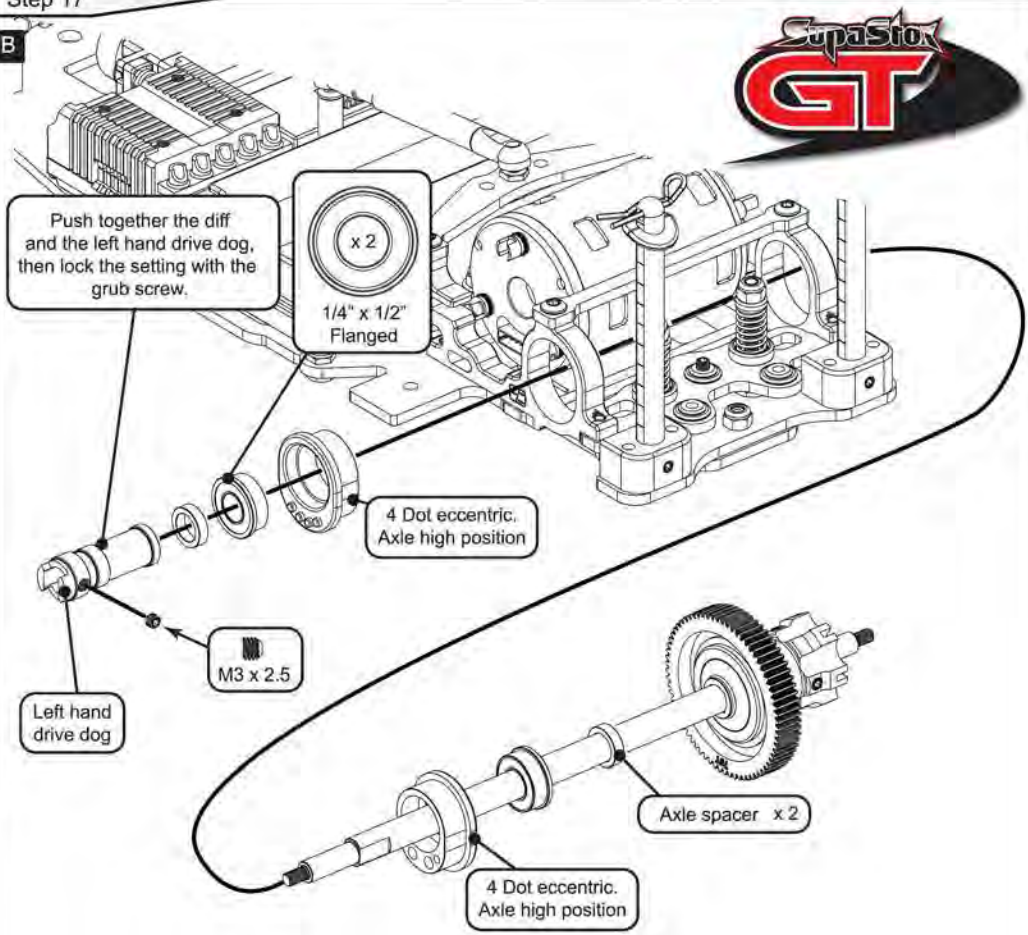
Push together the diff and the left hand drive dog, then lock the setting with the grub screw.
x 2
1/4" x 1/2" Flanged
4 Dot eccentric. Axle high position
M3 x 2.5
Left hand drive dog
Axle spacer x 2
4 Dot eccentric. Axle high position

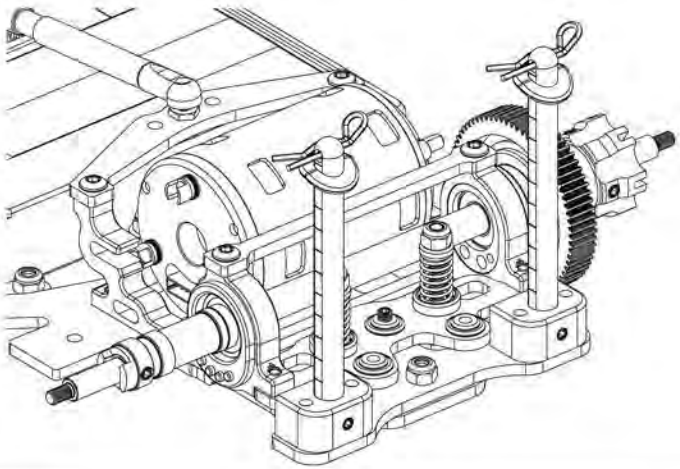

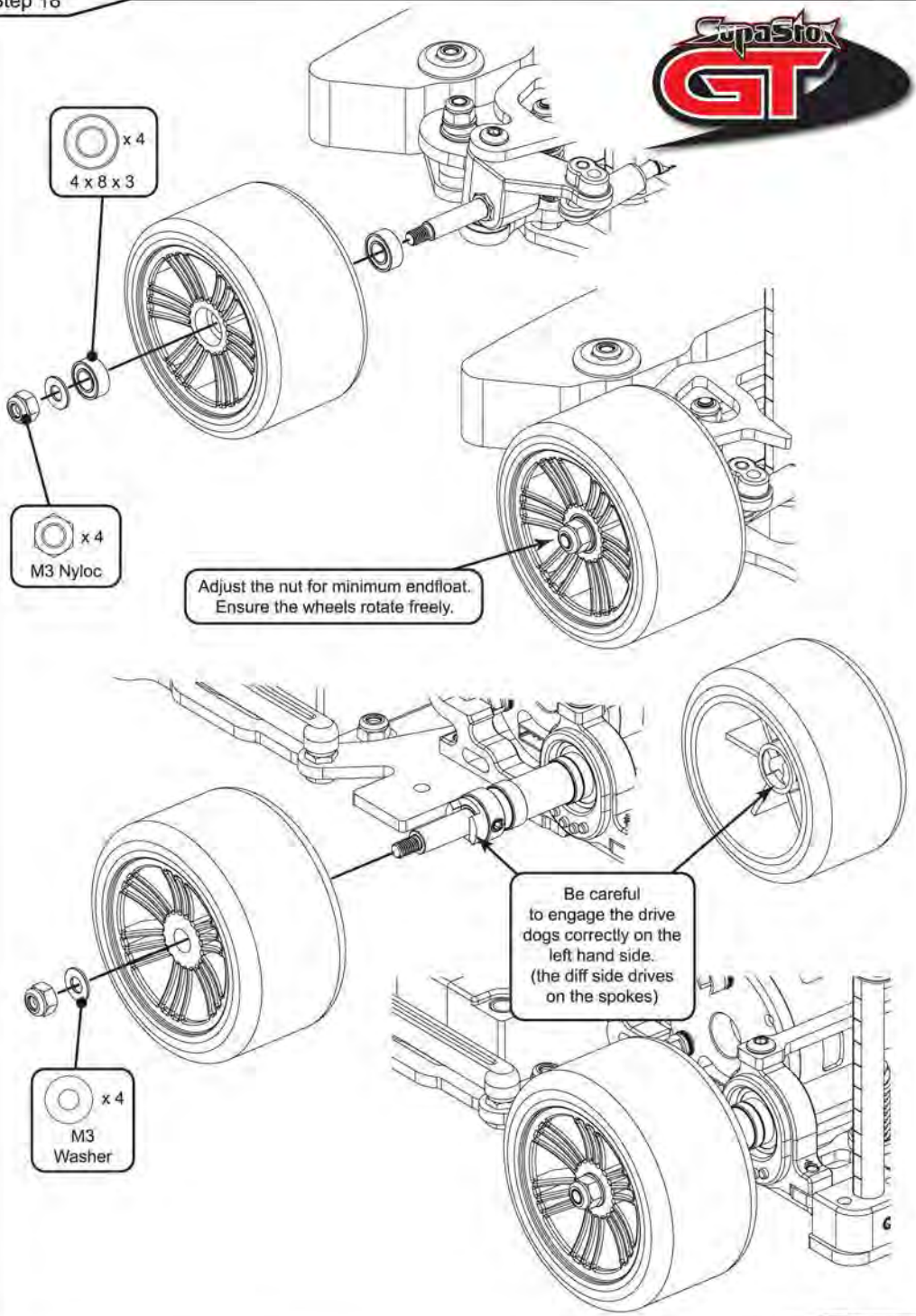
x 4
4 x 8 x 3
x 4
M3 Nyloc
Adjust the nut for minimum endfloat.
Ensure the wheels rotate freely.
Be careful
to engage the drive
dogs correctly on the
left hand side.
(the diff side drives
on the spokes)
x 4
M3
Washer

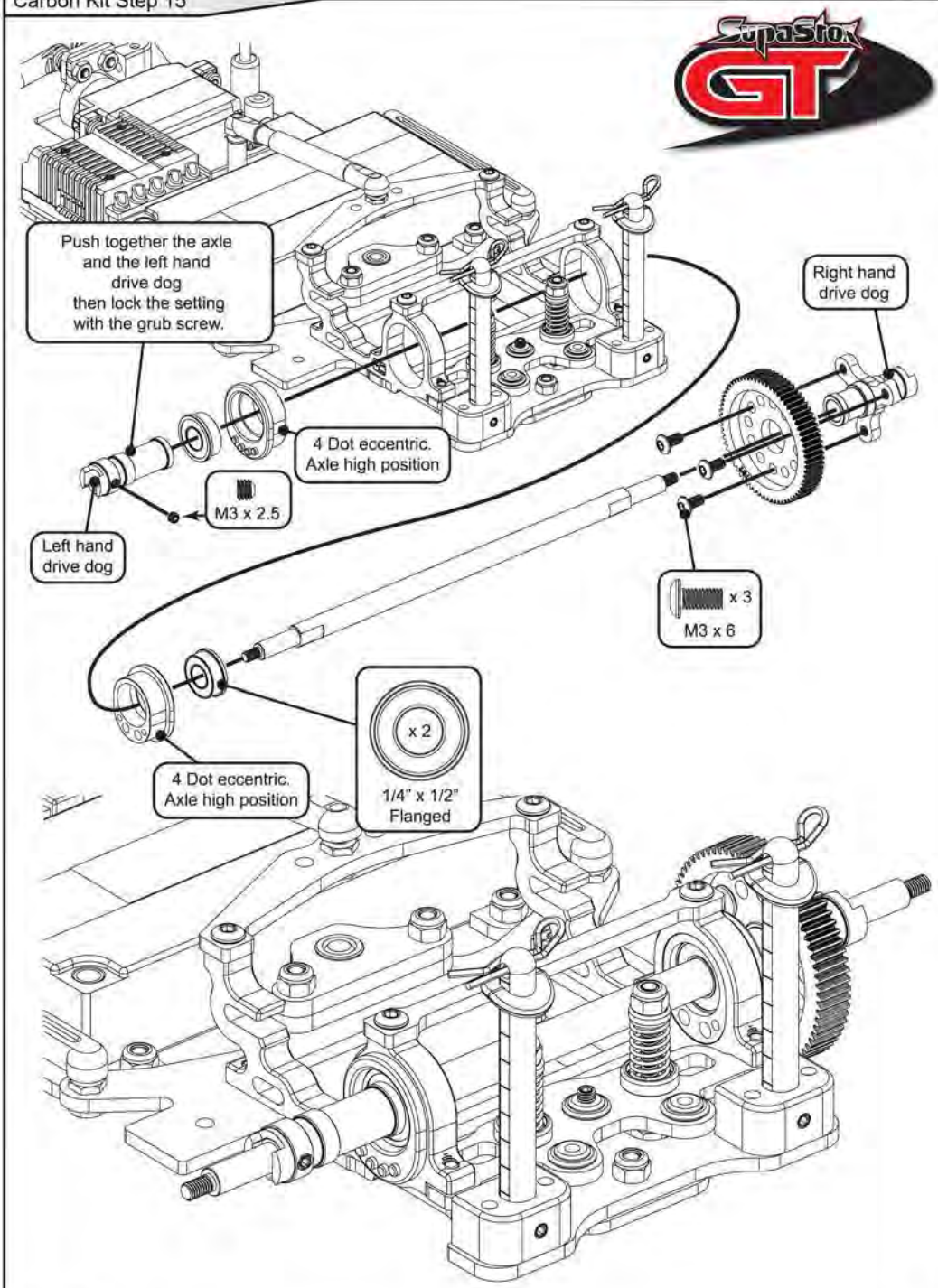
Push together the axle and the left hand drive dog then lock the setting with the grub screw.
Right hand drive dog
4 Dot eccentric. Axle high position
M3 x 2.5
Left hand drive dog
x 3
M3 x 6
x 2
4 Dot eccentric. Axle high position
1/4" x 1/2" Flanged

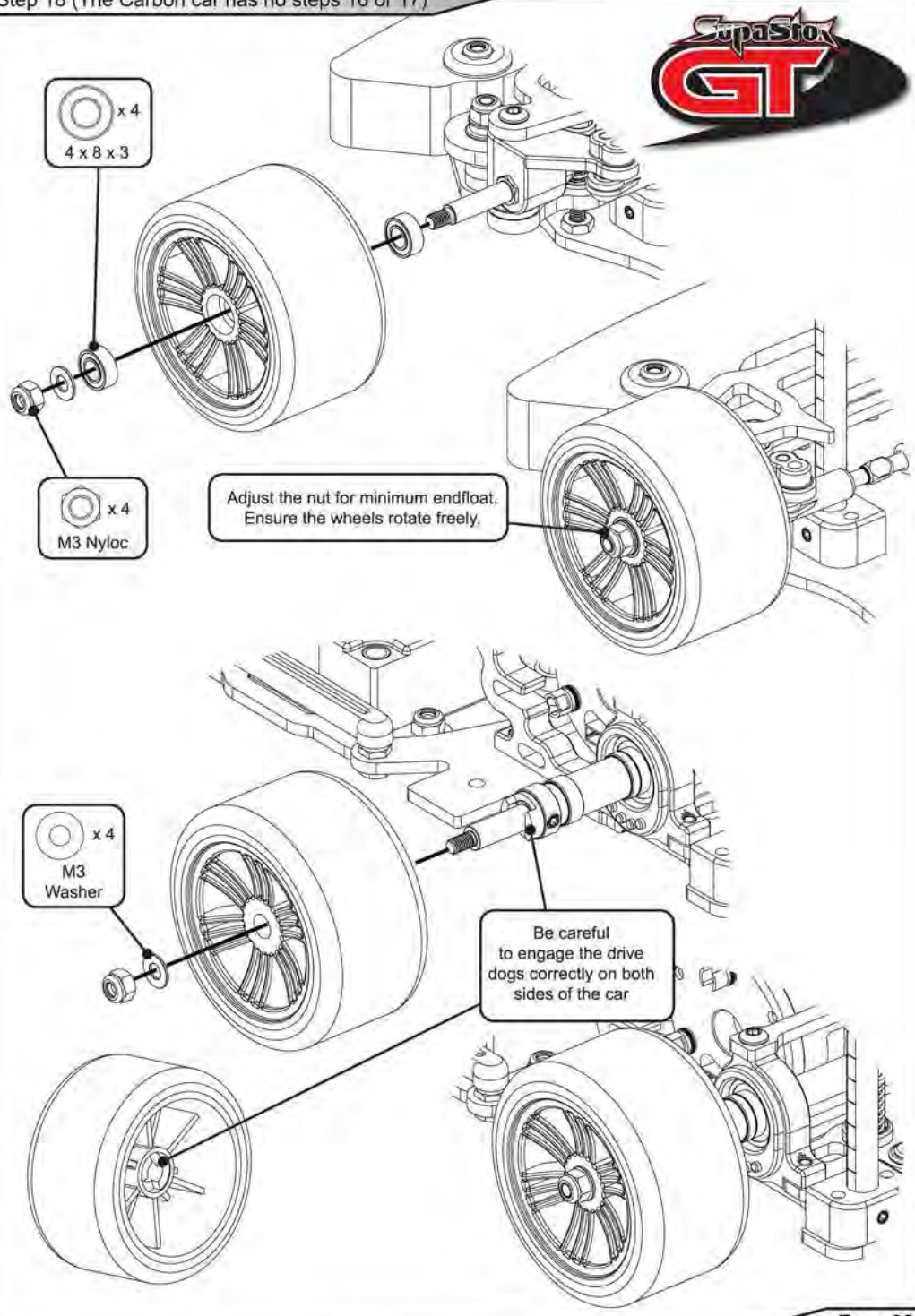
x 4
4 x 8 x 3
x 4
M3 Nyloc
Adjust the nut for minimum endfloat.
Ensure the wheels rotate freely.
x 4
M3
Washer
Be careful
to engage the drive
dogs correctly on both
sides of the car

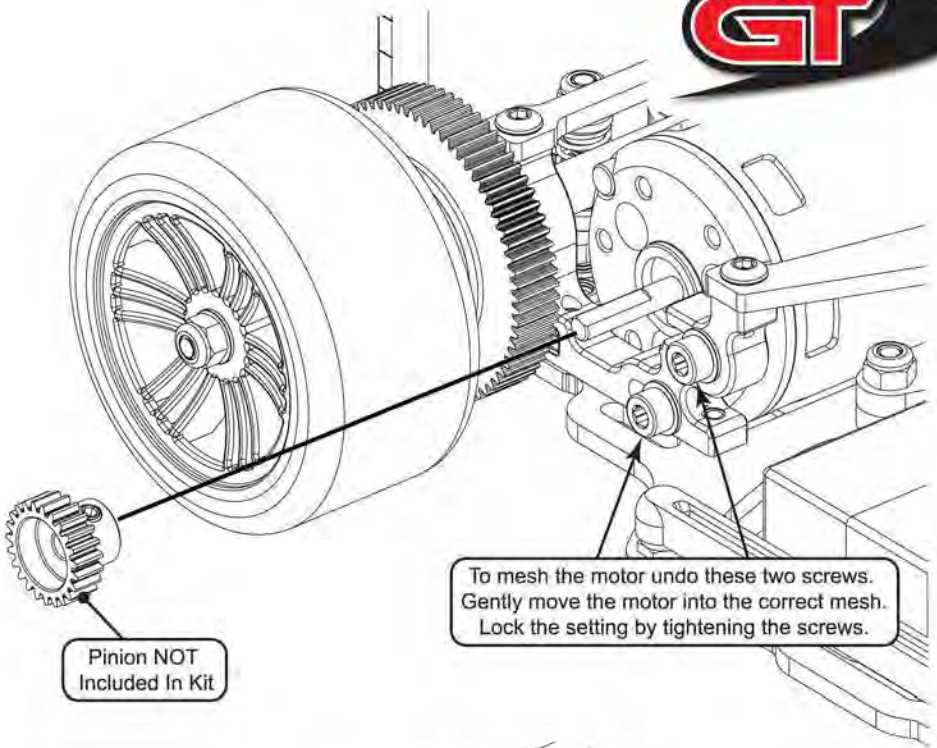
To mesh the motor undo these two screws.
Gently move the motor into the correct mesh.
Lock the setting by tightening the screws.
Pinion NOT
Included In Kit

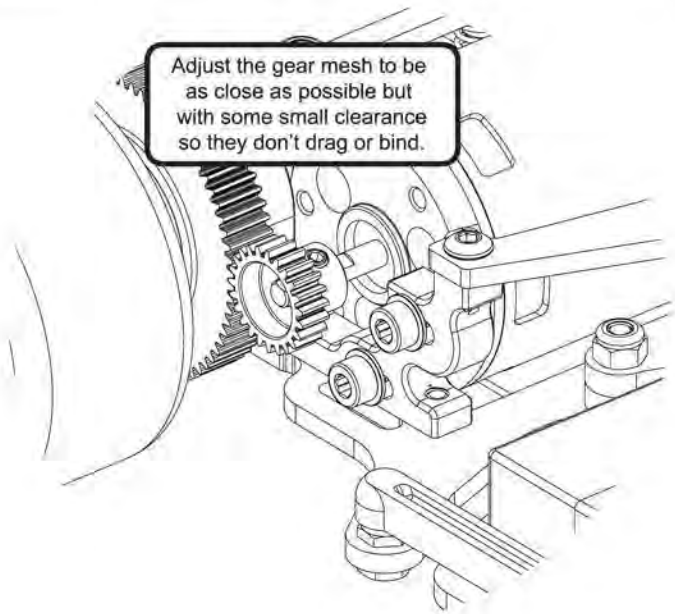
Adjust the gear mesh to be
as close as possible but
with some small clearance
so they don't drag or bind.

Remember when buying a servo to get the correct servo saver.
CR487 Core RC 1/12th Servo Saver 23T - SS GT
CR488 Core RC 1/12th Servo Saver 25T - SS GT

KO30114 - Servo - RSx 12 - 7.5Kg (Requires CR487)

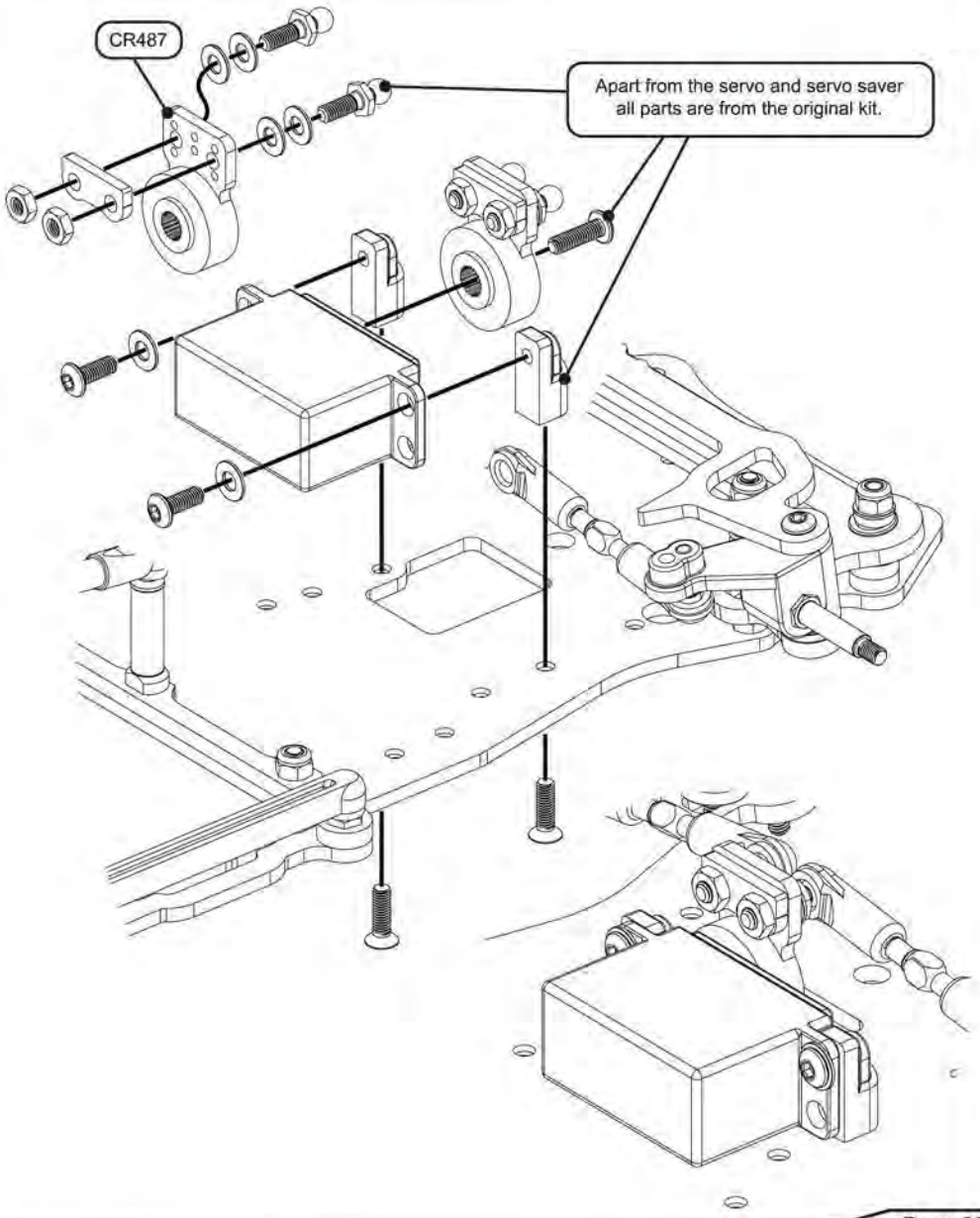

Remember when buying a servo to get the correct servo saver.
CR487 Core RC 1/12th Servo Saver 23T - SS GT
CR488 Core RC 1/12th Servo Saver 25T - SS GT

CR286 CORE RC 1/10th Servo Low Pro Digital Coreless 9Kg (Requires CR488)

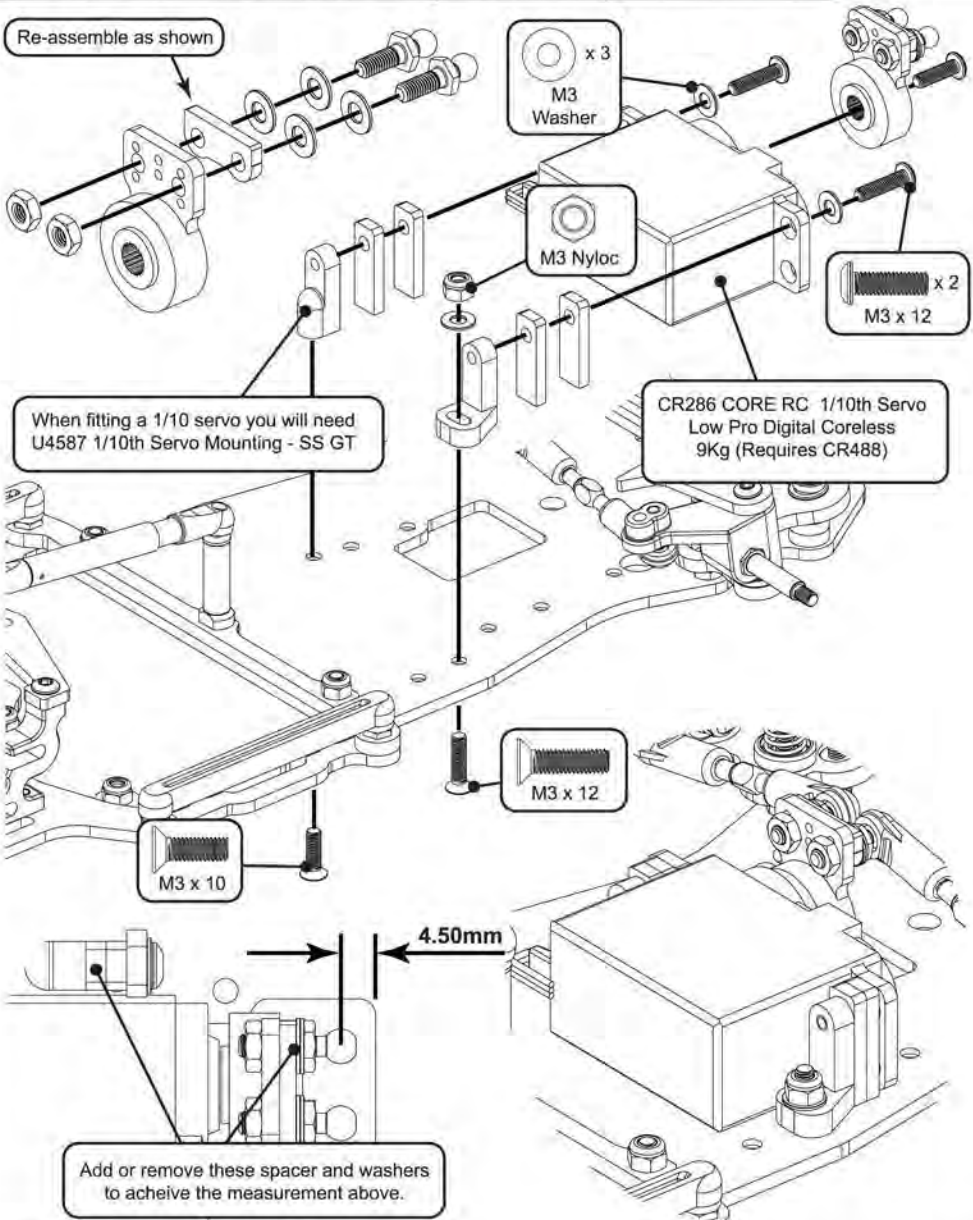

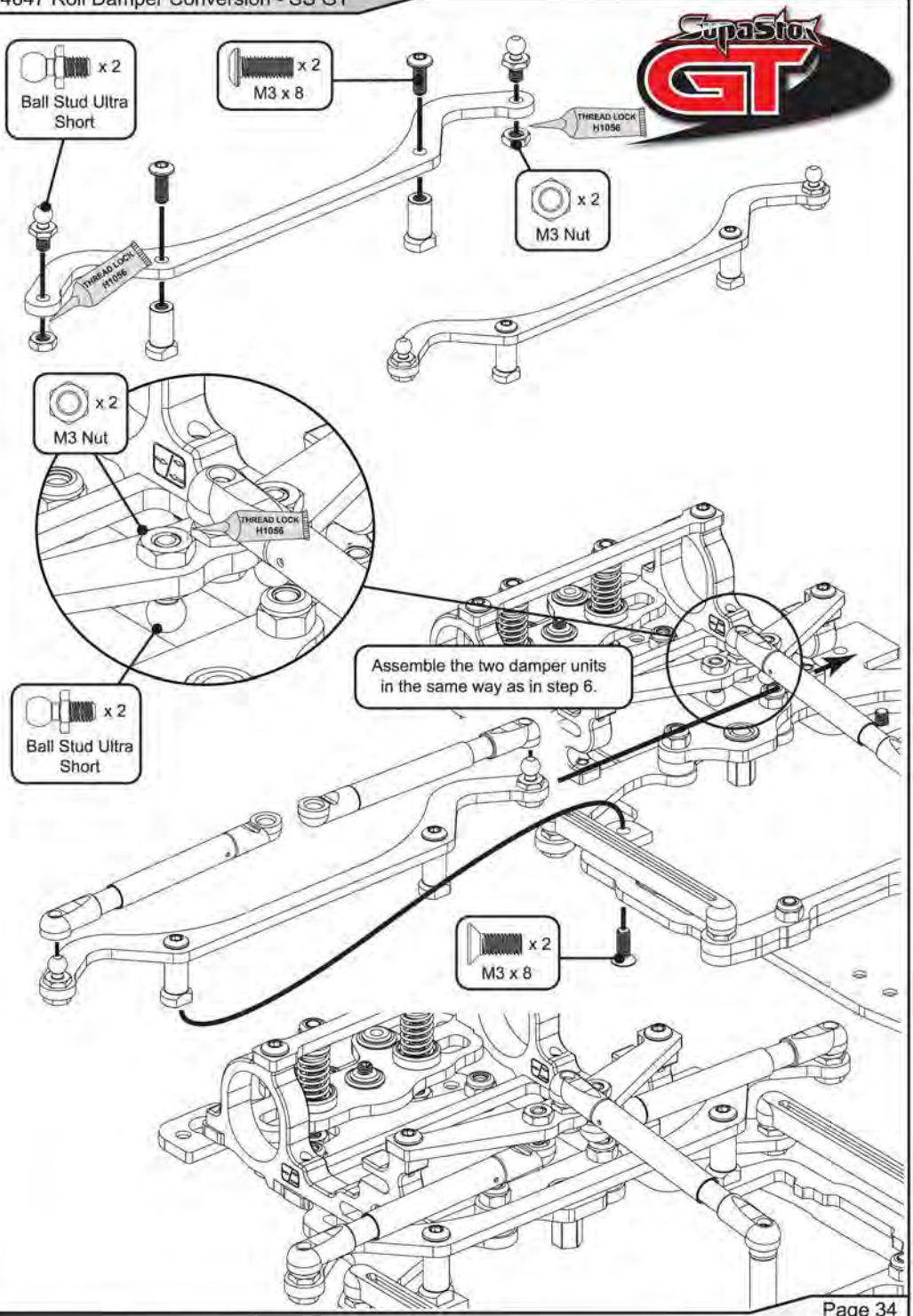
x 2
Ball Stud Ultra Short
x 2
M3 x 8
THREAD LOCK H1056
x 2
M3 Nut
THREAD LOCK H1056
x 2
M3 Nut
THREAD LOCK H1056
x 2
Ball Stud Ultra Short
Assemble the two damper units in the same way as in step 6.
x 2
M3 x 8



G890 SupaStox Hot Hatch Type TS Body



G891 SupaStox Hot Hatch Type RC Body



G893 SupaStox Hot Hatch Type FF Body



G892 SupaStox Hot Hatch Type P2 Body



G894 SupaStox Touring Type M6 Body



G898 SupaStox GT12 Body - Type AM



G903 SupaStox GT12 Body - Type AU



G888 SupaStox GT Body - Type A
G904 SupaStox GT12 Body - Type A - Light Weight



G902 SupaStox GT12 Body - Type F
G905 SupaStox GT12 Body - Type F - Light Weight

Trued and Glued Wheels

contact
RC RACING TYRES
"Racing Precision"

JM32RN	GT12 Rear 32Sh
JM35RN	GT12 Rear 35sh
JM37RN	GT12 Rear 37sh
JM40RN	GT12 Rear 40sh
JM42FB	GT12 Front 42sh B\B Rim
JM45FB	GT12 Front 45sh B\B Rim
JM47FB	GT12 Front 47Sh B\B Rim
JM50FB	GT12 Front 50Sh B\B Rim
JM56FB	GT12 Front Dual 50/60Sh B\B Rim
JM60FC	GT12 Front 60Sh B/B Rim - 50mm



Suspension Springs
U3965 - 5lb/in White
U3966 - 7lb/in Yellow
U3967 - 10lb/in Blue
U3968 - 14lb/in Green
U3969 - 19lb/in Red
U3970 - 26lb/in Black
U4061 Spring Tuning Set - SupaStox - (6prs)



U4273 - Pro Ball Stud Ultra Short - pk4
U4274 - Pro Ball Stud Short - pk4
U4275 - Pro Ball Stud Long - pk4



U3976
Purple Alloy 2.5mm Motor Spacer



U4633
Diff Assembled 70T - 48DP - SS GT

U4624 - Camber Strap 1.0 Deg
U4625 - Camber Strap 1.5 Deg
U4626 - Camber Strap 2.0 Deg



U4646
Rear Pod 30g Balance Weight



U4111
Diff Axle Alloy - SupaStox



U2166
Alloy Blocks & Flex Body Posts



U3984
Front Wishbone Set - SupaStox



U4647
Roll Damper Conversion - SS GT



U4639
Lipo Strap + Posts - S1 - SSGT

Car Settings

We recommend you start by building your supastox to the specification shown in this instruction manual. Then there are many adjustments you can make to tune your car to your track and driving style.

Tyres

The most important factor is to get the tyres right. Contact foam tyres are designed for use on carpet tracks.

Shore hardness

35 37 40 42 45 47 50 56 60

Softer = more grip ⟷ harder = less grip



Use softer front tyres if you want more steering, and harder front tyres if you want less steering.
In high traction conditions sometimes you can have too much overall grip.
Using harder tyres all round should make you faster through the corners with less traction rolling.

RACERS TIP - If you have too much steering then add a few spots of superglue (***CR522 or MR-Superglue)*** to the outside edge of the front tyre to reduce the front tyre grip. (make sure it is fully dried before returning to the track)

Gear ratio

Divide the number of teeth on the spur by the number of teeth on the pinion to calculate the gear ratio. (e.g. 46/16 = 2.87)

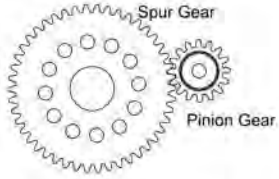

A bigger pinion (lower numerical gear ratio) will give more top speed, and less acceleration, be careful not to 'overgear' the car with too big a pinion, because this can cause overheating and damage the speed controller and motor. Always start with a small pinion first.

The rear tyre diamter also effects the gear ratio.
A more accurate method of gear ratio measurement is 'mm/rev', because this takes into consideration the tyre diameter.
The example below shows how to do this.
For 50mm tyres.
First work out the gear ratio from the spur gear and pinion (For example 46/16 = 2.87).
Then work out the following equation.

$$\frac{\text{50 (tyre dia) x } \pi \text{ (3.142)}}{\text{2.87(gear ratio)}} = 54.60\text{mm/rev}$$

32DP GEARS

Pinion

Spur	8	9	10	11	12	13	14	15	16	17	18	19	20	21	22	23	24
46					3.83	3.54	3.29	3.07	2.88	2.71	2.56	2.42	2.30	2.19	2.09	2.00	1.92
48			4.80	4.36	4.00	3.69	3.43	3.20	3.00	2.82	2.67	2.53	2.40	2.29	2.18		
50	6.25	5.56	5.00	4.55	4.17	3.85	3.57	3.33	3.13	2.94	2.78	2.63	2.50				
52	6.50	5.78	5.20	4.73	4.33	4.00	3.71	3.47	3.25	3.06	2.89						

Minimum Combined Tooth Sum 58T
Maximum Combined Tooth Sum 70T

48DP GEARS

Pinion

Spur	14	15	16	17	18	19	20	21	22	23	24	25	26	27	28	29	30	31	32	33	34	35	36	37
66									3.00	2.86	2.75	2.64	2.53	2.44	2.35	2.27	2.20	2.12	2.06	2.00	1.94	1.88	1.83	1.78
70					3.89	3.68	3.50	3.33	3.18	3.04	2.92	2.80	2.69	2.59	2.50	2.41	2.33	2.26	2.19	2.12	2.06	2.00	1.94	1.89
74	5.29	4.93	4.63	4.35	4.11	3.89	3.70	3.52	3.36	3.22	3.08	2.96	2.85	2.74	2.64	2.55	2.47	2.39	2.31					
78	5.57	5.20	4.88	4.59	4.33	4.11	3.90	3.71	3.55	3.39	3.25	3.12	3.00	2.89	2.79									

Minimum Combined Tooth Sum 88T
Maximum Combined Tooth Sum 106T

Ackerman angle

The amount the inside front wheel turns relative to the outside front wheel is called the 'ackerman angle'.

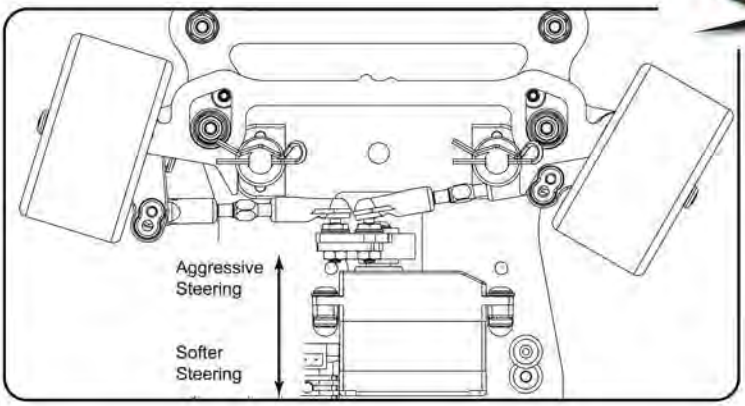

Use washers under the ball studs on the servo saver, alternatively add or remove servo spacers to move the Track rods forwards or backwards.
A forward position increases the ackerman angle and makes the steering more aggressive.
A backwards position softens the steering, making the car easier to drive.

Damping O'rings

Adjust the damping by changing the o'rings under the Suspension links. Too little damping or springing can cause the car to 'chatter'. Too much damping reduces overall grip.

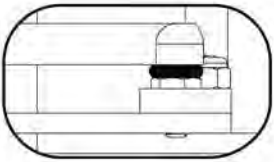

No o'rings blue white red black

Soft ← → Hard

Damper units

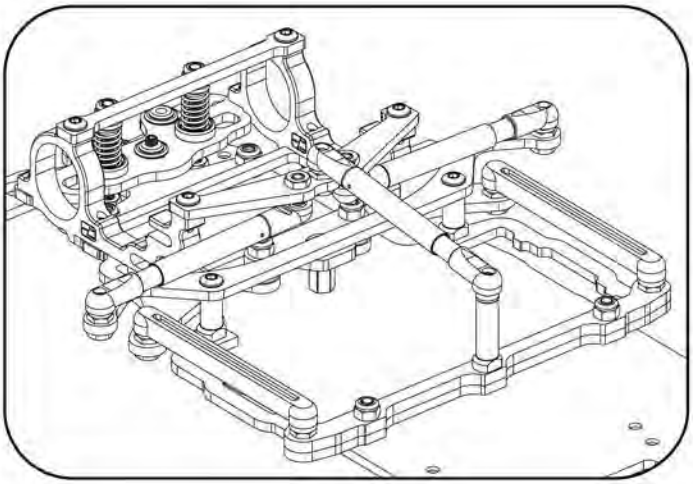

Optional damper tubes provide an alternative to using o'rings for side to side damping.
Start with 10,000wt oil for low grip conditions rising to 20,000wt for higher grip conditions

Front castor

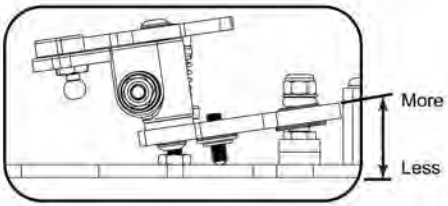

More castor increases the amount of steering and car aggression.
Less castor gives less steering and makes the car easier to drive.

Front toe-in

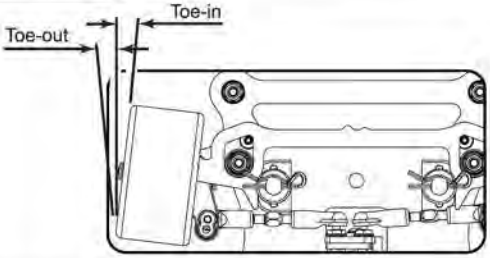

Adjust the toe-in with the steering turnbuckles.
More toe-in increaes stability but reduces steering.
Less toe-in or toe-out increases responsiveness but can make the car more unstable.
Standard setting is 0 to -1° toe out.
toe in is normally never used.

Steering

Use hole 'A' in the steering arm for a high velocity ratio. This means that a small amount of transmitter stick movement will create a relatively large amount of wheel movement, resulting in a fast steering response.
Hole 'B' will lower the velocity ratio and make the car less responsive.

(If you have a transmitter with adjustable endpoints set the steering so that full movement on the transmitter stick, gives full lock of the wheel and no more)

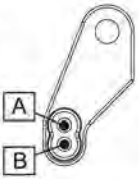

Springs

Softer springs will ride the bumps better and generally allow the car to roll more which increases traction.
Harder springs make the car more responsive and are more suitable for high grip tracks.

5lb/in White 7lb/in Yellow 10lb/in Blue 14lb/in Green 19lb/in Red 26lb/in Black

Soft → Hard

Additionally the rear spring position can be Adjusted to change the roll stiffness. The soft roll gives More traction, whereas the hard roll makes the car More agile and responsive.

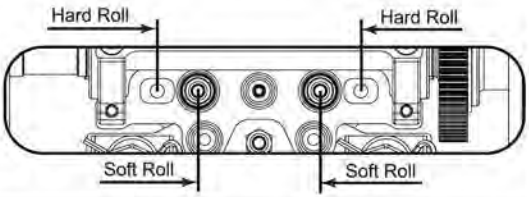

Front camber

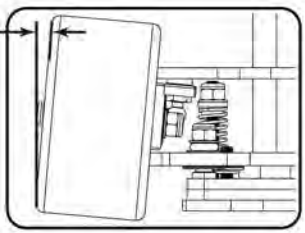

More camber reduces steering under most circumstances.
Less camber increases the tyre contact patch giving more steering.

Rear Pod angle

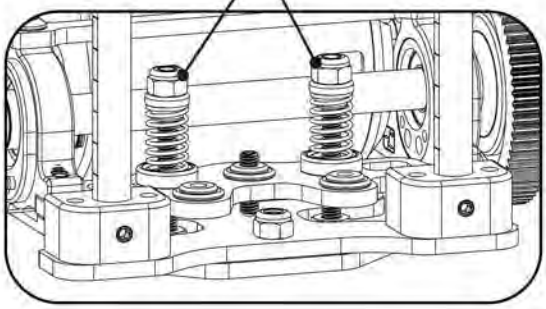

Select the correct ride height adjuster for the tyre size below.
Extremely fine adjustment can be made using springs, but they are mainly used to adjust the tweak of the car.

Select the required spring for the amount of chassis roll required.

Front Rake angle, ride height

Adjust the ride height with the spacer above or below the hub carrier.

(For more adjustment see U4655 Steering Shim Set - SS GT (6pcs))

Finely adjust the ride height with the spring nut.

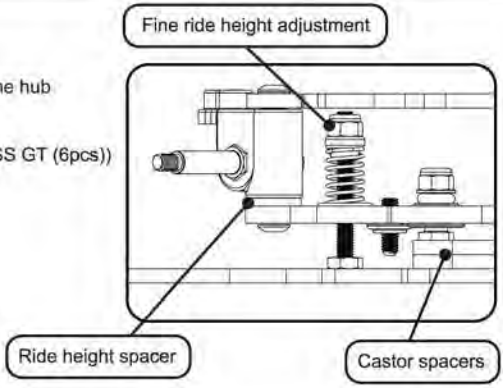

Rear Ride Height

Ride height adjusters are paired to the foam tyre diameters.
Note the orientation of the pips, low or high depending on your foam diameter.

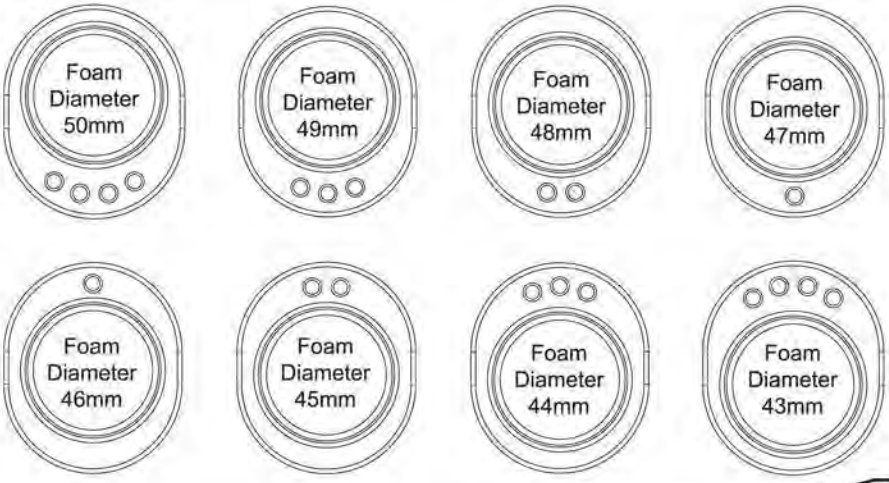

Rear Droop Screw

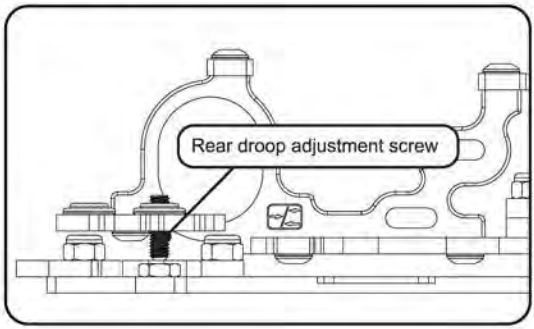

Rear droop adjusts the balance of the cars handling. Less droop makes the car more agressive, squaring up the turns. More droop gives less corner rotation but an easier car to drive.
Start with 2mm of droop, so when lifting the chassis there is 2mm of travel before the wheels lift off the floor.

Front Droop Screws

Adjust the front droop with the droop screws.
Ensure they are equal on both sides.
More droop gives more steering but a less precise feel.

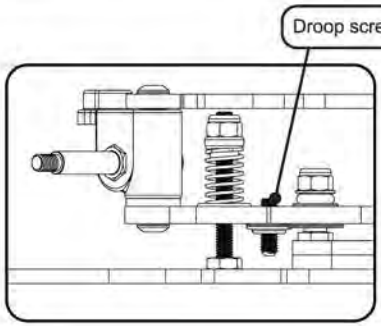

Diff Setting and Exploded diagram

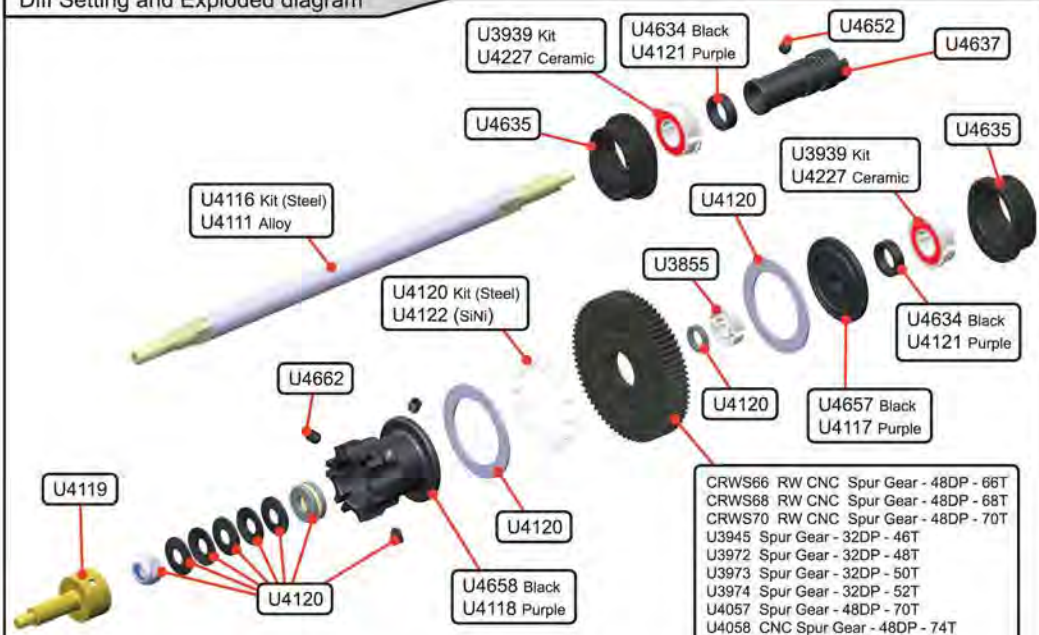

CRWS66 RW CNC Spur Gear - 48DP - 66T
CRWS68 RW CNC Spur Gear - 48DP - 68T
CRWS70 RW CNC Spur Gear - 48DP - 70T
U3945 Spur Gear - 32DP - 46T
U3972 Spur Gear - 32DP - 48T
U3973 Spur Gear - 32DP - 50T
U3974 Spur Gear - 32DP - 52T
U4057 Spur Gear - 48DP - 70T
U4058 CNC Spur Gear - 48DP - 74T
U4059 CNC Spur Gear - 48DP - 78T
U4123 Spur Gear - 48DP - 66T

ELECTRIC - SupaStox GT CARS

K154 SupaStox GT - S1
K157 SupaStox GT - Carbon

CHASSIS PARTS

U1042 Aerial Mount - Universal
U119 Aerial Tube - Pack 4
U3942 Foam Bumper - SupaStox
U3943 Body Posts and Blocks - SupaStox (pr)
U3944 Front Hub Carriers (pr) - SupaStox
U3954 Front Axle - SupaStox
U3963 Rake Spacers 2.5mm - SupaStox
U4623 C/F Chassis - SS GT
U4625 Camber Strap 1.5 Deg - S1 - SS GT
U4636 Front Beam - S1 - SS GT
U4638 Lipo Nest + Support - S1 - SS GT
U4641 Manual - SS GT
U4644 Pod Base - S1 - SS GT
U4645 Rear Body Mount - S1 - SS GT
U4649 S1 Chassis - SS GT
U4653 Spring Hanger and Straps - S1 - SS GT
U4654 Front Ride height Shim Set - SS GT (6pcs)

SUSPENSION

U3495 Ball Studs; Ultra Short - pk 4
U3496 Ball Studs; Short - pk 4
U3497 Ball Studs; Long - pk 4
U3965 Suspension Spring 5lb/in White (pr)
U3966 Suspension Spring 7lb/in Yellow (pr)
U3967 Suspension Spring 10lb/in Blue (pr)
U3968 Suspension Spring 14lb/in Green (pr)
U3969 Suspension Spring 19lb/in Red (pr)
U3970 Suspension Spring 26lb/in Black (pr)
U3977 Moulded Links 57.2mm (pk3) -
U4061 Spring Tuning Set - SupaStox - 6prs
U4274 Pro Ball Stud Short - pk4
U4298 Turnbuckle HT - Touring 35mm - 1pr
U4547 Ball Sockets Long Pro-Mi5evo-(pk8)
U4551 Ball Sockets Short Pro-Mi5evo-(pk8) B
U4627 Chassis Post Long - SS GT
U4629 Damper Piston - SS GT
U4630 Damper Unit - SS GT
U4631 Damper Tube - SS GT
U4642 Mouldings Set - SS GT
U4643 Pivot Ball Set + Spacer - SS GT

TRANSMISSION

U3946 Rear Axle - SupaStox
U3948 RH Drive Dog - SupaStox
U4057 Spur Gear 48DP - 70T - SupaStox
U4116 Diff Axle Steel - SupaStox
U4119 Diff Stub Axle - SupaStox
U4120 Diff Rebuild Kit - SupaStox
U4633 Diff Assembled 70T - 48DP - SS GT
U4634 Diff Spacer - SS GT (2pcs)
U4635 Ride Height Adjusters (8pcs) - SS GT
U4637 LH Drive Dog - SS GT
U4656 Trans Housing - SS GT (1pc)
U4657 Washer carrier - LH - SS GT
U4658 Washer carrier - RH - SS GT

SHOCK AND DIFF OIL

CR222 CORE RC Silicone Oil - 10000cSt - 60ml
CR223 CORE RC Silicone Oil - 20000cSt - 60ml
CR229 CORE RC Silicone Oil - 12000cSt - 60ml
CR230 CORE RC Silicone Oil - 15000cSt - 60ml

BODYSHELLS AND DECALS

G888 SupaStox GT12 Type A Body
G890 SupaStox Hot Hatch Type TS
G891 SupaStox Hot Hatch Type RC
G892 SupaStox Hot Hatch Type P2
G893 SupaStox Hot Hatch Type FF
G894 SupaStox Touring Type M6
G898 SupaStox GT12 Body - Type AM
G902 SupaStox GT12 Body - Type F
G903 SupaStox GT12 Body - Type AU
G904 SupaStox GT12 Body - Type A - Light Weight
G905 SupaStox GT12 Body - Type F - Light Weight
U3478 Decal sheet - Schumacher and Racing-Cars.Com
U4632 Decal Sheet - SS GT

BEARINGS AND BALLS

H1031 Bearing Blaster Aerosol 500ml
U1300 Axle Grease - Pot
U1301 Silicone Diff Lube - Pot
U1957 Moly Grease - Pot
U3075 Ball Bearing 4x8x3mm Red Sealed (pr)
U3939 Ball Bearing 1/4 X 1/2" Flanged Red Seal (pr)
U3855 Ball Bearing 5x10x3 Open (pr)

SPEED PACKS

U1544 SPEED PACK - Short M3; Cap Hd
U1547 SPEED PACK - M3 Nuts
U1548 SPEED PACK - M3 Washers
U1550 SPEED PACK - Socket Wrenches (pk3)
U1552 SPEED PACK - R Clips
U1606 SPEED PACK - Servo Tape - 30pk
U2187 SPEED PACK - M3 Nyloc Nut - Purple Alloy (pk8)
U2356 SPEED PACK - M3x16-30 Csk Screws (pk12)
U2760 SPEED PACK - M3 Button Hd; 4 to 20
U2856 SPEED PACK - Sticky Cable Clips (pk10)
U2988 SPEED PACK - M3 Csk Washers - Purple Alloy (pk10)
U3022 SPEED PACK - M3x8 Csk Allen Hi-T
U3023 SPEED PACK - M3x10 Csk Allen Hi-T
U3024 SPEED PACK - M3x12 Csk - M3 x 10 Button Screws
U3131 SPEED PACK Alloy Spacers M3x7mm 0.5;1;2mm (pk18)
U3572 SPEED PACK - M3x14 Grub Srew pk4
U4155 SPEED PACK - M3 Csk Washers - Black Alloy (pk10)
U4210 SPEED PACK - Pinion Grub Screw Set pk10
U4241 SPEED PACK - M3 Alloy Nyloc Nuts - Black - pk10
U4650 SPEED PACK - M3 Nyloc Nut Steel - Black (10pcs)
U4651 SPEED PACK M3x10 Grub Screws (10pcs)
U4652 SPEED PACK M3x2.5 Grub Screws (10pcs)
U4662 SPEED PACK M3x4 Grub Screws - Cone Point (10pcs)

SPEED SECRETS

CRWS66	RW CNC SupaStox Spur Gear - 48DP - 66T
CRWS68	RW CNC SupaStox Spur Gear - 48DP - 68T
CRWS70	RW CNC SupaStox Spur Gear - 48DP - 70T
U2166	Alloy Blocks and Flex Body Post - Horizontal
U3386	Ceramic Bearing - 4x8x3 - Shielded (pr)
U3571	Alloy Servo Mounts - 1/10th scale
U3945	46T 32DP Spur Gear - SupaStox
U3972	48T 32DP Spur Gear - SupaStox
U3973	50T 32DP Spur Gear - SupaStox
U3974	52T 32DP Spur Gear - SupaStox
U3975	Wishbone Posts - SupaStox (pr)
U3976	Motor Spacer 2.5mm - SupaStox
U3984	Front Wishbone Set - SupaStox
U3986	Suspension O'ring Tuning Set - SupaStox
U4058	Spur Gear CNC 48DP - 74T - SupaStox
U4059	Spur Gear CNC 48DP - 78T - SupaStox
U4111	Diff Axle Alloy - SupaStox
U4112	S/Steel Shims 1/4x5/16"x0.004"-SupaStox GT"
U4122	Silicone Nitride Balls 3mm - SupaStox - pk12
U4123	Spur Gear 48DP - 66T - SupaStox
U4227	Ceramic Bearings - 1/4 x 1/2 Flanged - pr
U4273	Pro Ball Stud Ultra Short - pk4
U4275	Pro Ball Stud Long - pk4
U4587	1/10th Servo Mounting - SS GT
U4624	Camber Strap 1.0 Deg - S1 - SS GT
U4626	Camber Strap 2.0 Deg - S1 - SS GT
U4628	Chassis Post Short - SS GT
U4639	Lipo Strap + Posts - S1 - SS GT
U4646	Rear Pod 30g Balance Weight - SS GT
U4647	Roll Damper Conversion - SS GT
U4648	Roll Damper Plate - S1 - SS GT
U4655	Front Ride height Shim Set - SS GT (6pcs)

SERVOS

CR194	CORE RC - Servo 5008 - 5Kg 1/12th/GT12
CR286	1/10 CORE RC Servo Low Pro Digital Coreless 9Kg
KO30114	KO Servo - RSx 12 - 7.5Kg (Requires CR290)

PINIONS

CR4815	Pinion Gear 48DP 15T (7075 Hard)
CR4816	Pinion Gear 48DP 16T (7075 Hard)
CR4817	Pinion Gear 48DP 17T (7075 Hard)
CR4818	Pinion Gear 48DP 18T (7075 Hard)
CR4819	Pinion Gear 48DP 19T (7075 Hard)
CR4820	Pinion Gear 48DP 20T (7075 Hard)
CR4821	Pinion Gear 48DP 21T (7075 Hard)
CR4822	Pinion Gear 48DP 22T (7075 Hard)
CR4823	Pinion Gear 48DP 23T (7075 Hard)
CR4824	Pinion Gear 48DP 24T (7075 Hard)
CR4825	Pinion Gear 48DP 25T (7075 Hard)
CR4826	Pinion Gear 48DP 26T (7075 Hard)
CR4827	Pinion Gear 48DP 27T (7075 Hard)
CR4828	Pinion Gear 48DP 28T (7075 Hard)
CR4829	Pinion Gear 48DP 29T (7075 Hard)
CR4830	Pinion Gear 48DP 30T (7075 Hard)
CR4831	Pinion Gear 48DP 31T (7075 Hard)
CR4832	Pinion Gear 48DP 32T (7075 Hard)

PINIONS Cont....

CR4833	Pinion Gear 48DP 33T (7075 Hard)
CR4834	Pinion Gear 48DP 34T (7075 Hard)
CR4835	Pinion Gear 48DP 35T (7075 Hard)
CR4836	Pinion Gear 48DP 36T (7075 Hard)
CR4837	Pinion Gear 48DP 37T (7075 Hard)
U3414	Pinion; Hard Alloy 48dp - 14T
U3415	Pinion; Hard Alloy 48dp - 15T
U3416	Pinion; Hard Alloy 48dp - 16T
U3417	Pinion; Hard Alloy 48dp - 17T
U3418	Pinion; Hard Alloy 48dp - 18T
U3419	Pinion; Hard Alloy 48dp - 19T
U3420	Pinion; Hard Alloy 48dp - 20T
U3421	Pinion; Hard Alloy 48dp - 21T
U3422	Pinion; Hard Alloy 48dp - 22T
U3423	Pinion; Hard Alloy 48dp - 23T
U3424	Pinion; Hard Alloy 48dp - 24T
U3425	Pinion; Hard Alloy 48dp - 25T
U3426	Pinion; Hard Alloy 48dp - 26T
U3427	Pinion; Hard Alloy 48dp - 27T
U3428	Pinion; Hard Alloy 48dp - 28T
U3429	Pinion; Hard Alloy 48dp - 29T
U3430	Pinion; Hard Alloy 48dp - 30T
U3431	Pinion; Hard Alloy 48dp - 31T
U3432	Pinion; Hard Alloy 48dp - 32T
U3433	Pinion; Hard Alloy 48dp - 33T
U3434	Pinion; Hard Alloy 48dp - 34T
U3435	Pinion; Hard Alloy 48dp - 35T
U3436	Pinion; Hard Alloy 48dp - 36T
U4008	Pinion; Hard Alloy 32dp - 8T
U4009	Pinion; Hard Alloy 32dp - 9T
U4010	Pinion; Hard Alloy 32dp - 10T
U4011	Pinion; Hard Alloy 32dp - 11T
U4012	Pinion; Hard Alloy 32dp - 12T
U4013	Pinion; Hard Alloy 32dp - 13T
U4014	Pinion; Hard Alloy 32dp - 14T
U4015	Pinion; Hard Alloy 32dp - 15T
U4016	Pinion; Hard Alloy 32dp - 16T
U4017	Pinion; Hard Alloy 32dp - 17T
U4018	Pinion; Hard Alloy 32dp - 18T
U4019	Pinion; Hard Alloy 32dp - 19T
U4020	Pinion; Hard Alloy 32dp - 20T
U4021	Pinion; Hard Alloy 32dp - 21T
U4022	Pinion; Hard Alloy 32dp - 22T
U4023	Pinion; Hard Alloy 32dp - 23T
U4024	Pinion; Hard Alloy 32dp - 24T

CORE-RC .COM

TEAM MERCHANDISE

G310	Schumacher Rubber Pit Mat - 750mm x 500mm
G338	2 Tone Beanie Knitted Hat
G339L	Jacket - 3 Layer Softshell; Black - L 44inch
G339M	Jacket - 3 Layer Softshell; Black - M 41inch
G339S	Jacket - 3 Layer Softshell; Black - S - 38inch
G339XL	Jacket - 3 Layer Softshell; Black - XL 46inch
G339XS	Jacket - 3 Layer Softshell; Black - XS - 34inch
G339XXL	Jacket - 3 Layer Softshell; Black - XXL 48inch
G339XXXL	Jacket - 3 Layer Softshell; Black - XXXL 50inch
G340	Schumacher Baseball Cap - Black
G341	Schumacher Flat bill Cap - Black
G342L	T - Navy - Large 100% cotton knit mens
G342M	T - Navy - Medium 100% cotton knit mens
G342S	T - Navy - Small 100% cotton knit mens
G342XL	T - Navy - X-Large 100% cotton knit mens
G342XXL	T - Navy - XX-Large 100% cotton knit mens
G342XXXL	T - Navy - XXX-Large 100% cotton knit mens
G342XXXXL	T - Navy - XXXX-Large 100% cotton knit mens
G342XXXXXL	T - Navy - XXXXX-Large 100% cotton knit mens
G343L	Sweat-Navy-Large 80% cotton,20% polyester knit men
G343M	Sweat-Navy-Med, 80% cotton,20% polyester knit men
G343S	Sweat-Navy-Small,80% cotton,20% polyester knit men
G343XL	Sweat-Navy-XL, 80% cotton,20% polyester knit men
G344L	Polo - Navy - Large, 100% cotton knit mens
G344M	Polo - Navy - Med, 100% cotton knit mens
G344S	Polo - Navy - Small, 100% cotton knit mens
G344XL	Polo - Navy - X-Large, 100% cotton knit mens
G344XXL	Polo - Navy - XX-Large, 100% cotton knit mens
G344XXXL	Polo - Navy - XXX-Large, 100% cotton knit mens
G344XXXXL	Polo - Navy - XXXX-Large, 100% cotton knit mens
G344XXXXXL	Polo - Navy - XXXXX-Large, 100% cotton knit mens
G351	Schumacher Thermo Mug
G352	Schumacher Umbrella

GENERAL ACCESSORIES

CR005	CORE RC Battery Tape - Black
CR006	CORE RC Battery Tape - Blue
CR037	CORE RC - Battery Tape - Purple
CR043	CORE RC - Silver X-Weights 16pcs
CR058	CORE RC - Black X-Weights 16pcs
CR060	Small Body Clip 1/10 - Gloss Black (8)
CR061	Small Body Clip 1/10 - Silver (8)
CR062	Small Body Clip 1/10 - Gold (8)
CR063	Small Body Clip 1/10 - Fluorescent Yellow (8)
CR064	Small Body Clip 1/10 - Fluorescent Green (8)
CR065	Small Body Clip 1/10 - Fluorescent Red (8)
CR066	Small Body Clip 1/10 - Metallic Green (8)
CR067	Small Body Clip 1/10 - Metallic Red (8)
CR068	Small Body Clip 1/10 - Metallic Blue (8)
CR069	Small Body Clip 1/10 - Metallic Purple (8)
CR159	Core RC - Battery Tape - Orange
CR197	CORE RC - Glass Setup Board
CR297	CORE RC - Neoprene Bag
CR487	Core RC 1/12th Servo Saver 23T - SS GT
CR488	Core RC 1/12th Servo Saver 25T - SS GT
CR522	CORE RC - 522 Pro Tyre Glue + 2 Nozzles
G353	Schumacher Glass Setup Board

GENERAL ACCESSORIES Cont...

G354	Schumacher - Neoprene Bag
J003	Contact RC - Glass Setup Board
J004	Contact RC - Neoprene Bag

TOOLS

CR044	CORE RC - Curved Body Scissors
CR045	CORE RC - Straight Body Scissors
CR102	Magnetic Parts Tray - Purple
CR103	Magnetic Parts Tray - Black
CR148	CORE RC - Polybutler Pit Box; Black
CR271	4 Way Wrench Small - 4.0,4.5,5.5,7.0mm
H1026	Ride Height Gauge; Purple Alloy; 0-10mm
H1032	Alloy Camber Gauge - 1/10th
H1056	Loctite 243 Thread Lock 3ml
U2789	Schumacher Hex Driver - 1.5mm
U2790	Schumacher Hex Driver - 2.0mm
U2791	Schumacher Hex Driver - 2.5mm
U2795	Schumacher M3 Nut Driver
U2796	Schumacher M4 Nut Driver
U2818	Schumacher Body Reamer
U3582	Precision Balance Pivot Set
U4229	Steel Spanner - 5.5mm/3.9mm

TRANSMITTERS AND RECEIVERS

CR151	CODE 2.4G FHSS LCD 2 Stick TxRx
CR152	CODE 2.4G FHSS LCD - Rx Only
CR153	CODE 2.4G FHSS Sport 2 Stick TxRx
CR154	CODE 2.4G FHSS Sport - Rx Only
KO21005	KR-211FH 2.4GHz FHSS Receiver
KO21007	KR-413FH Micro Receiver
KO80540	EX-1 Ver 3 (KIY) KR-413FH Set - TX + RX
KO80700	Esprit IV - 2Ch Stick Radio Set

ELECTRONICS

CR162	CORE RC Sensor Checking Widget
CR175	GT12 Power Plant-PACE ESC/SP 13.5/1S Lipo
CR189	Oval Power Plant-PACE ESC/SP 10.5/1S Lipo
SK-500015	Corner Weight System

BATTERIES

CR007	CORE RC Silicone Wire 12g - Red/Black 2x50cm
CR008	CORE RC RED Connector with 2x4mm Tubes
CR009	CORE RC RED Connector with 2x4mm Males
CR050	CORE RC Silicone Wire 12g - Red 1 Metre
CR051	CORE RC Silicone Wire 12g - Black 1 Metre
CR052	CORE RC Silicone Wire 12g - Blue 1 Metre
CR115	CORE RC Silicone Wire 12g - Red/Black/Blue 3x50cm
CR172	CORE RC - 3200mAHr 3.7V 25C 1S Lipo
CR287	Silicone Wire Black 14 AWG - 1Mtr
CR288	Silicone Wire Black 16 AWG - 1Mtr
IPBG2S4800V9	Intellect Shorty Lipo 4800mAh 2S- 90C- 7.4V G5
IPCC1S7000V9	Intellect Lipo 7000mAh 1S- 90C- 3.7V G4
MR-SB	MR33 Lipo Bag
NR999509	Lipo 6600 1/12 X-treme Race 1S 100C/50C-3.7V
NR999511	Lipo 4700 1/10 X-treme Race Shorty 110C/55C-7.4V

BATTERIES Cont....

TTP3800-2SPR65S Thunder Power Lipo 3800mAh 2S shorty - 65C/130C
P6800-1SAE65B Thunder Power Lipo 6800mAh 1S - 3.7V - 65C/130C

BRUSHLESS ACCESSORIES

CR134 Core Sensor Lead; 180mm
HW2361200 XERUN - Sensor Cable - 120mm
NR925315 NOSRAM Sensor Wire HighFlex 150mm

BRUSHLESS ESC and MOTOR COMBO

SP000193 Reventon-R ESC-2S-Comp V3.0-10.5R Combo
SP000194 Reventon-R ESC-2S-Comp V3.0-13.5R Combo
SP000195 Reventon-R ESC-2S-Comp V3.0-17.5R Combo
SP000200 Reventon Stock Club Race 10.5 Combo Comp V3 Motor
SP000201 Reventon Stock Club Race 13.5 Combo Comp V3 Motor
SP000202 Reventon Stock Club Race 17.5 Combo Comp V3 Motor
SP000203 Reventon Stock Club Race 21.5 Combo Comp V3 Motor
SP000208 Reventon Stk Clb Rce 13.5R Combo V3 Fix Tmng Motor
SP000209 Reventon Stk Clb Rce 17.5 Combo V3 Fix Tmng Motor
SP001039 Reventon Pro V1.1 ESC Comp V3.0-13.5R Combo
SP001041 Reventon Pro V1.1 ESC Comp V3.0-21.5R Combo
SP001147 Reventon Pro V1.1 ESC MMM 13.5R Combo
SP001149 Reventon Pro V1.1 ESC MMM 21.5R Combo

BRUSHLESS MOTORS

HW30401020047 XERUN - 1/10 Sensored BL Motor V10 - 13.5T
HW30401020048 XERUN - 1/10 Sensored BL Motor V10 - 17.5T
HW30401020049 XERUN - 1/10 Sensored BL Motor V10 - 21.5T
HW30404110004 QUICRUN-3650-21.5T-Sensored 1/10 BL Motor
NR91844 Nosram Pure 2 BL Spec Racing Motor - 13.5T
NR91854 Nosram Pure 2 BL Spec Racing Motor - 17.5T
SK-400003-31 ARES Pro BL Motor 17.5T Spec
SK-400003-32 ARES Pro BL Motor 21.5T Spec
SK-400003-34 ARES Pro BL Motor 13.5T Spec
SP000038 1/10 Competition MMM Series 13.5R BL Motor
SP000039 1/10 Competition MMM Series 17.5R BL Motor
SP000040 1/10 Competition MMM Series 21.5R BL Motor
SP138135V3 Speed Passion V3.0 Comp BL Motor; 13.5T
SP138175V3 Speed Passion V3.0 Comp BL Motor; 17.5T
SP138215V3 Speed Passion V3.0 Comp BL Motor; 21.5T
TPM-540A135 Thunder Power 13.5T Stock Spec 540 BL Motor
TPM-540A175 Thunder Power 17.5T Stock Spec 540 BL Motor
TPM-540A215 Thunder Power 21.5T Stock Spec 540 BL Motor

BRUSHLESS SPEEDCONTROLS

CR173 PACE 45R Brushless ESC 1s/2s
CR174 PACE 45R/60R Programming Card
CR199 PACE 60R Brushless ESC 1S/2S
HW30112121051 XERUN - V3.1 - 1S - Black BL ESC 120A
NR90960 Comet EVO Brushless Speed Control
NR90970 Comet HD Brushless Speed Control
SK-300048 Toro 120A 1S BL Sensor ESC
SP000150 Reventon Pro 1.1 EX - Black - 140A (1-2 Cell)
SP000739 Reventon Pro ESC-2S - V1.1 Black
SP000740 Reventon Pro ESC-2S - V1.1 - Laser Blue

CHARGERS AND DISCHARGERS

CR031 UDC Charger Connector Set - 8pcs
CR161 UAC50 Charger 12v/110-240v 6A
SK-100013 SKY RC - Quattro B6 Charger 50Wx4 AC/DC
SK-100046 Sky-RC Quattro B6 Charger 80Wx4 DC
SK-100064-01 T6755 Charger 7A 55W AC/DC Touch Screen
SK-100068-01 SKY RC 6 x 80+ Charger Blue Version
SK-100069 Synchronous DC Charger 1000W 40A
SK-100072-01 T6200 Charger 12A 200W DC Touch Screen
SK-100078-01 SKY RC RS16 - 180W 16A DC Charger
SK-100084 Imax B6 Mini Charger 6A 60W DC
SK-100087 Ultimate Duo Charger 500x2 - 25A DC
SK-200008-01 SKY RC 15V - 4A AC Adapter
SK-200012-03 SKY RC 15V - 7A AC Adapter
SK-200013-01 eFuel 30A 540W Power Supply
SK-200015-01 eFuel 50A 1200W Power Supply
SK-200017-01 SKY RC 17A Power Supply (UK Plug)
TP610C Thunder Power 10 Amp DC Balance Charger
TP610C-ACDC Thunder Power 10 Amp AC/DC Balance Charger
TP820CD Dual Port 20A DC charger/Cycler

1/12 FOAMS; SUPASTOX-GT12

JM32RN GT12 Rear 32Sh
JM35RN GT12 Rear 35sh
JM37RN GT12 Rear 37sh
JM40RN GT12 Rear 40sh
JM42FB GT12 Front 42sh B\B Rim
JM45FB GT12 Front 45sh B\B Rim
JM47FB GT12 Front 47Sh B\B Rim
JM50FB GT12 Front 50Sh B\B Rim
JM56FB GT12 Front Dual 50/60Sh B\B Rim
JM60FC GT12 Front 60Sh B/B Rim - 50mm

TYRE ADDITIVE

C180101 CS Competition Grip Additive
C6400 CS High Grip Additive
C6431 CS Tire Clean Fix
C6460 CS Speed Grip Carpet
SXT00030 SXT 3.0 Traction Compound
NR96010 NOSRAM Traction additive carpet

Schumacher
racing-cars.com



3 Layer Soft Shell Team Jacket - Black

G339XS	Extra Small - 34 inch chest
G339S	Small - 38 inch chest
G339M	Medium - 41 inch chest
G339L	Large - 44 inch chest
G339XL	X Large - 46 inch chest
G339XXL	XX Large - 48 inch chest
G339XXXL	XXX Large - 50 inch chest



Team Hooded Sweatshirt - Navy Blue

G343S	Small
G343M	Medium
G343L	Large
G343XL	Extra Large



G352 Schumacher Team Umbrella



Caps - Black

G340	Schumacher Baseball Cap
G341	Schumacher Flat bill Cap



Team Polo Shirt - Navy blue

G344S	Small
G344M	Medium
G344L	Large
G344XL	X Large
G344XXL	XX Large
G344XXXL	XXX Large
G344XXXXL	XXXX Large
G344XXXXXL	XXXXX Large



Team T-Shirt - Navy blue

G342S	Small
G342M	Medium
G342L	Large
G342XL	X Large
G342XXL	XX Large
G342XXXL	XXX Large
G342XXXXL	XXXX Large
G342XXXXXL	XXXXX Large



G351 Schumacher Thermo Mug



G353 - Schumacher Glass Setup Board
G354 - Schumacher Neoprene Bag



G315 Schumacher Pit Towel



G310
Schumacher Rubber Pit Mat
750mm x 500mm



S500B - Team Schumacher Banner 3ft x 6ft