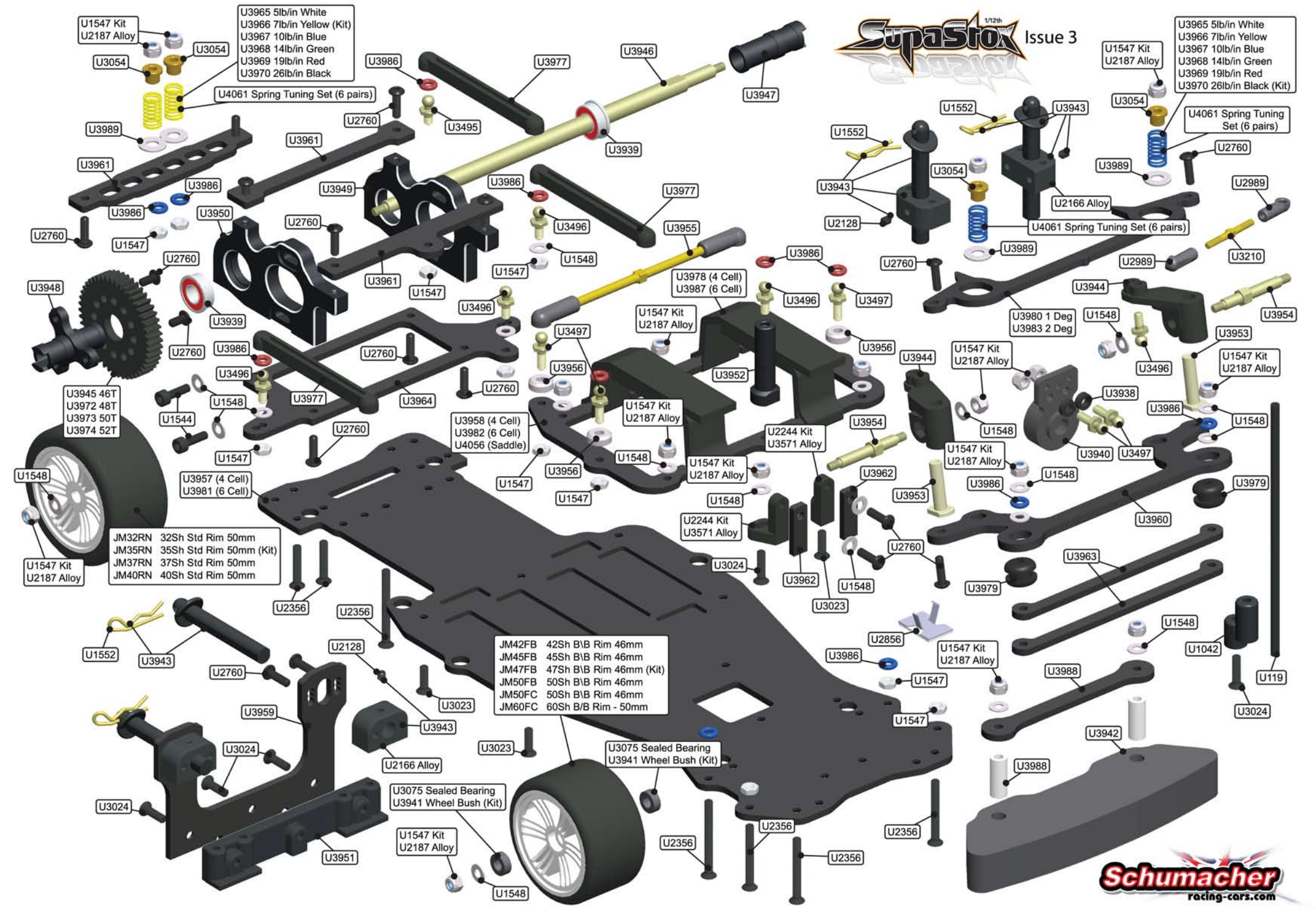
SupaStox 1/12th
Issue 3
U3965 5lb/in White
U3966 7lb/in Yellow (Kit)
U3967 10lb/in Blue
U3968 14lb/in Green
U3969 19lb/in Red
U3970 26lb/in Black
U4061 Spring Tuning Set (6 pairs)
U1547 Kit
U2187 Alloy
U3945 46T
U3972 48T
U3973 50T
U3974 52T
JM32RN 32Sh Std Rim 50mm
JM35RN 35Sh Std Rim 50mm (Kit)
JM37RN 37Sh Std Rim 50mm
JM40RN 40Sh Std Rim 50mm
U3957 (4 Cell)
U3981 (6 Cell)
U3958 (4 Cell)
U3982 (6 Cell)
U4056 (Saddle)
U3978 (4 Cell)
U3987 (6 Cell)
U2244 Kit
U3571 Alloy
U3980 1 Deg
U3983 2 Deg
U2166 Alloy
JM42FB 42Sh B\B Rim 46mm
JM45FB 45Sh B\B Rim 46mm
JM47FB 47Sh B\B Rim 46mm (Kit)
JM50FB 50Sh B\B Rim 46mm
JM50FC 50Sh B\B Rim 46mm
JM60FC 60Sh B/B Rim - 50mm
U3075 Sealed Bearing
U3941 Wheel Bush (Kit)
Schumacher
racing-cars.com