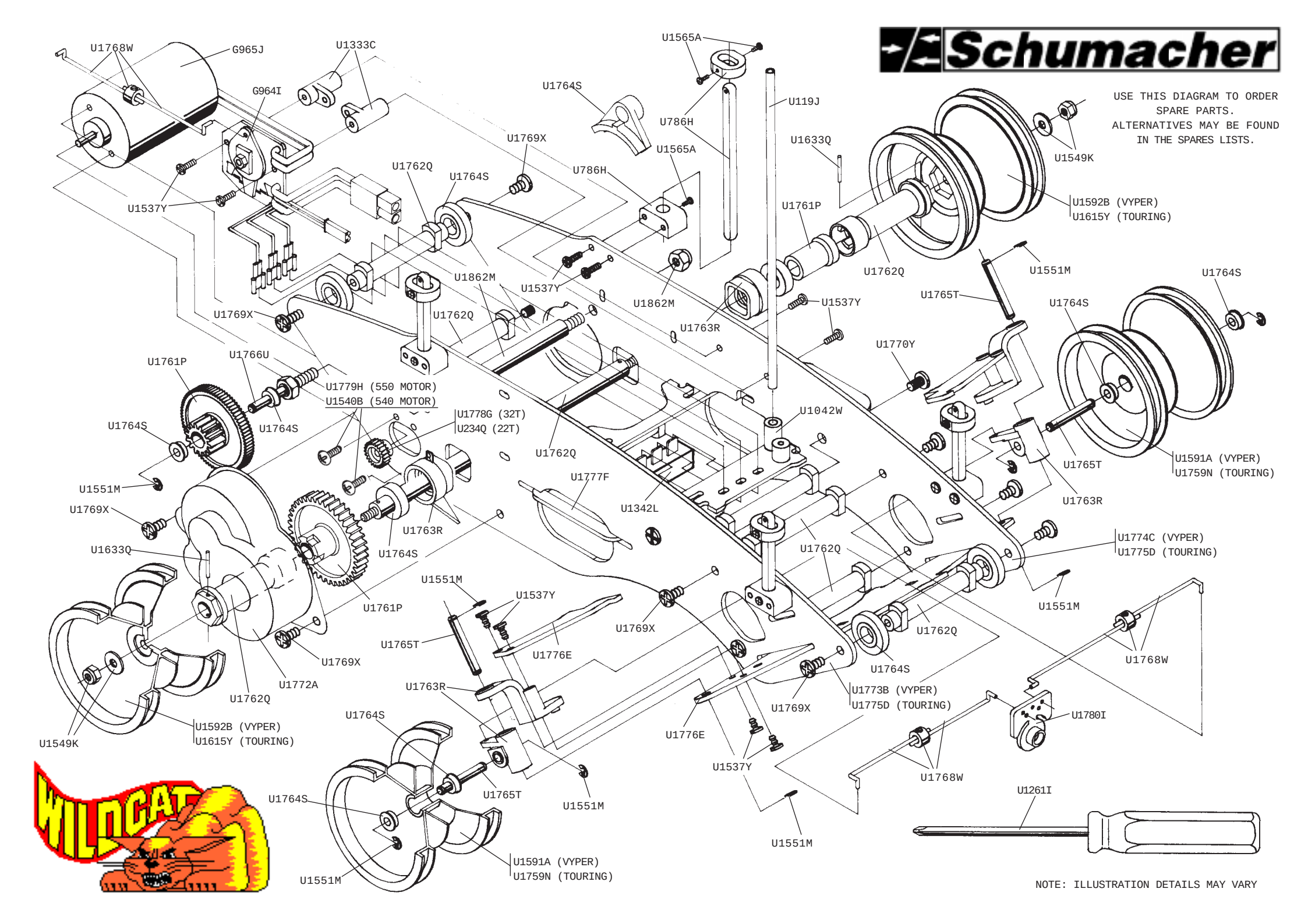
Schumacher
USE THIS DIAGRAM TO ORDER SPARE PARTS. ALTERNATIVES MAY BE FOUND IN THE SPARES LISTS.
U1768W
G965J
U1333C
G964I
U1537Y
U1565A
U1764S
U786H
U119J
U1633Q
U1549K
U1592B (VYPER)
U1615Y (TOURING)
U1769X
U1762Q
U1764S
U1862M
U1761P
U1551M
U1765T
U1763R
U1770Y
U1766U
U1779H (550 MOTOR)
U1540B (540 MOTOR)
U1778G (32T)
U234Q (22T)
U1042W
U1777F
U1342L
U1591A (VYPER)
U1759N (TOURING)
U1774C (VYPER)
U1775D (TOURING)
U1776E
U1772A
U1773B (VYPER)
U1780I
U1261I
NOTE: ILLUSTRATION DETAILS MAY VARY