X20 '24

1/10 SCALE ELECTRIC TOURING CAR

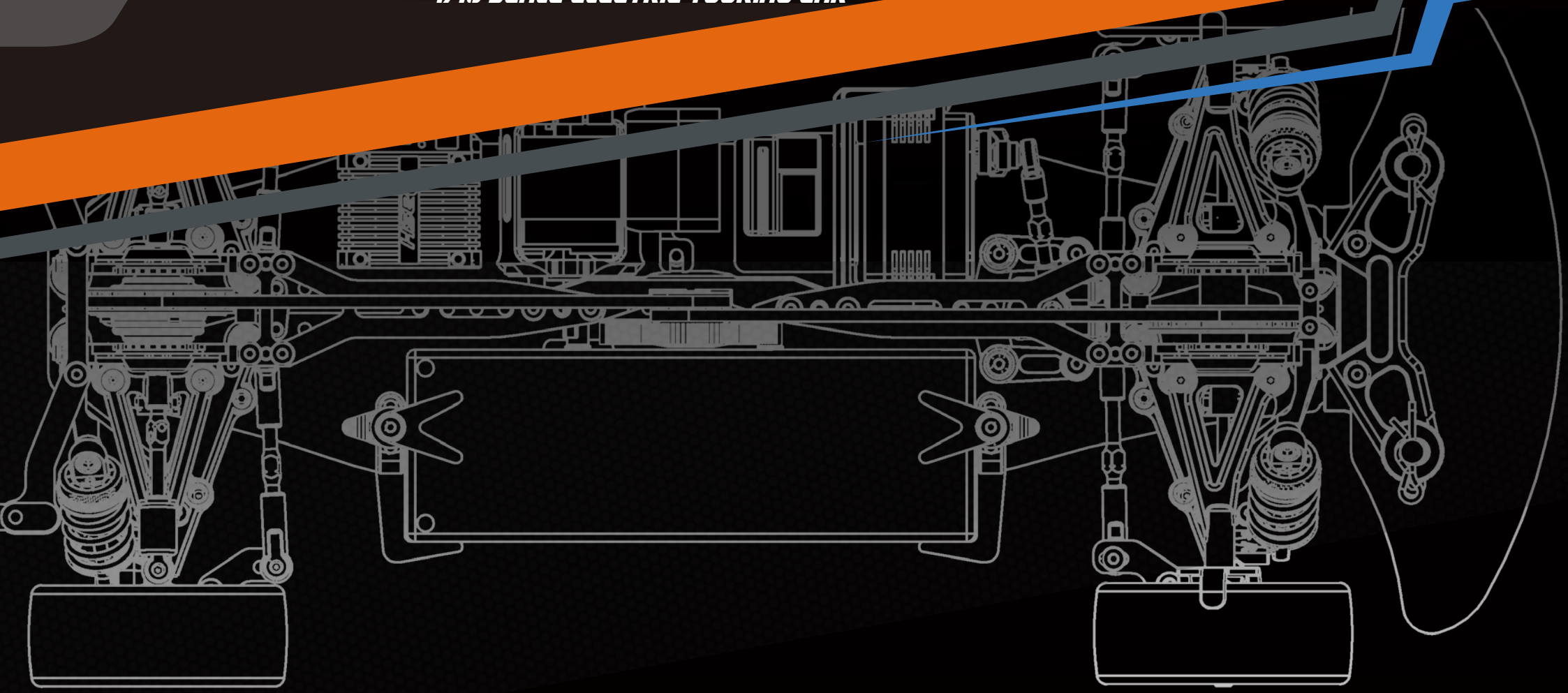

SERPENT

INTRODUCTION

Thank you very much for selecting this Serpent rc car and thus become a member of the ever growing worldwide Serpent racing family. Serpent started in 1980 and has been growing its product-line and fan -base ever since.

The Serpent X20'24 mEdius is a state of the art 1/10 scale 4WD touringcar which will give you the true Serpent racing experience. The assembly manual will guide you through all the steps to complete the car, so you can hit the track with a good base-set-up soonest. The Serpent design department succeeded to create a superbly performing car combined with eas of assembly and maintenance. The high quality standards of all parts and hardware will make racing your Serpent car a very rewarding activity!

Through our team, website and social media we will keep you up-to-date on all developments of the Serpent cars. We hope to meet you on the track and through our various media! Enjoy the drive!

Team Serpent
Multiple World Champions

INSTRUCTIONS

Serpent's long tradition of excellence extends to the instruction manuals, and this instruction manual is no exception. The easy-to-follow layout is richly illustrated with 3D-rendered full-color images to make your building experience quick and easy. Following the instructions will result in a well-built, high-performance race-car that will soon be able to unleash its full potential at the racetrack. The kit includes bags, with bagnumbers, which refer to the same step in the manual. Open only the indicated bag(s) per step and finish that part of the assembly. Remaining parts will be needed lateron in the assembly process.

PLASTIC PARTS

The Serpent moulded parts are very durable and hard. When assembling longer screws in new composite parts, make sure to use new hex bits in your (power) tools. Pre-threading also helps to avoid screw damage.

SETUP

In certain assembly steps you need to make basic adjustments, which will give you a good initial setup for your Serpent X20'24 mEdius Fine-tuning the initial setup is an essential part of building a high-performance racecar like your Serpent

EXPLODED VIEWS AND PARTS LIST

The exploded views and parts lists for the X20'24 mEdius are presented in the Reference Guide section in the back of this manual. The exploded views show all the parts of a particular assembly step along with the Serpent part number and hotlink to the Serpent website. Partnumbers in orange indicates that this part is an optional. Optionals part names and numbers are showed below.

CUSTOMER SERVICE

Serpent has made a strong effort to make this manual as complete and clear as possible. Additional info may be published in our website: www.serpent.com or you may ask your dealer or the Serpent distributor for advice, or email Serpent direct: info@serpent.com. The Serpent Facebook, Twitter and Youtube pages give additional means of support and communications.

SAFETY

Read and take note of the 'Read this First section' before proceeding to assemble the car-kit. This car-kit is intended for persons aged 16 or older.

READ THIS FIRST!

- This is a highly technical hobby product, intended to be used in a safe racing environment. This car is capable of speeds in excess of 80 km/h or 50mph. Please follow these guidelines when building and operating this model.
- Parental guidance is required when the builder/user of this car is under 16.
- Follow the building instructions. If in doubt, contact your dealer or importer.
- Be sure to use the proper tools when assembling the car. Always exercise caution when using electric tools, knives and other sharp objects.
- Be careful when using liquids like lubrication oil, fuel or glue. Do not swallow.
- Follow the manufacturer's instruction in case you experience irritation after using the product.
- Be careful when operating the car. Stay away from any rotating parts such as wheels, gears and transmission. Stay away from motor, engine and exhaust pipe system or speedo during and immediately after use, as these parts may be very hot. We advise to use protective hand cloves.
- Only operate this car in a safe environment, like a special racing track or a closed parking lot. Avoid using this car on public roads, crowded places or near infants.
- Before operating this car, always check the mechanical status of the car. Also check that the transmitter and receiver frequencies correspond and are not used by any other racer at the same time. Check that the batteries of the transmitter and receiver- are fully charged.
- After use, always check all the mechanics of the car. We advise to clean the car immediately after use, and inspect the parts for wear or fractures. Replace when necessary. Do not use water, methanol, thinner or other solvents to clean the car.
- Empty the fuel tank (depending on model) if needed and disconnect the receiver battery.
- Store the car in a dry and heated place to avoid corrosion of metal parts.
- Avoid using this car in wet conditions as the water will cause corrosion on the metal parts and bearings and these parts will cease to function properly. If driven in the wet, ensure that all the electric equipment is waterproofed and after use, that all moving parts are dried immediately.

CONTENTS Front & Rear assembly

- DIFF ASSEMBLY....4
- SOLID AXLE ASSEMBLY....5
- DJC ASSEMBLY....6
- CVD ASSEMBLY....7
- FRONT & REAR ASSEMBLY....9
- MOTORMOUNT ASSEMBLY....12
- REAR ASSEMBLY....14
- FRONT ASSEMBLY....19
- ANTIROLLBAR ASSEMBLY....22
- STEERING ASSEMBLY....23
- CENTRAL ASSEMBLY....26
- SHOCK ASSEMBLY....29
- BUMPER ASSEMBLY....32
- FINAL ASSEMBLY....34
- EXPLODED VIEWS....38
- TEAM SERPENT NETWORK....49

LINES DESCRIPTION

Each step contains a variety of numbers, lines, and symbols. The numbers represent the order in which the parts should be assembled. The lines are described below.

	Step number; the order in which you should assemble the indicated parts
	Length after assembly
	Assembly path of one item into another
	Group of items (within lines) should be assembled first
	Direction the item should be moved
	Glue one item to another
	Press/Insert one item into another
	Connect one item to another
	Gap between two items

ICONS DESCRIPTION

Each step contains a variety of symbols described below.

	Carefull, read and check very well.
	Apply a small amount of cyano glue. Use wear protection for eyes and hands.
	Detail view to explain assembly or order of parts better.
	Default set-up: This symbol indicates the default setup.
	Grease: apply a small amount of grease to the parts shown.
	Left and right parts should be assembled in the same way.
	Thread lock: apply a small amount on the parts shown. Before to apply the threadlock, make sure to degrease the parts very well, as otherwise the threadlock will not work.
	Silicone oil: use the indicated silicone oil for the shocks and differentials.
	Parts or items not included in the kit.
	Optional part, not standard in the kit.

STEP 1 DIFF BAG

1.1

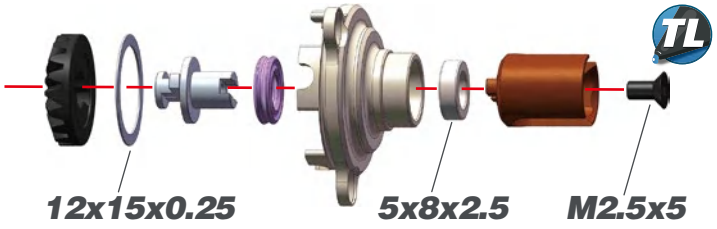

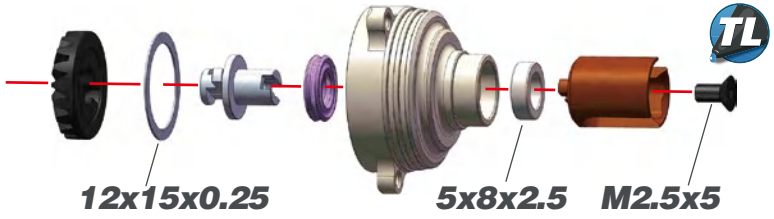

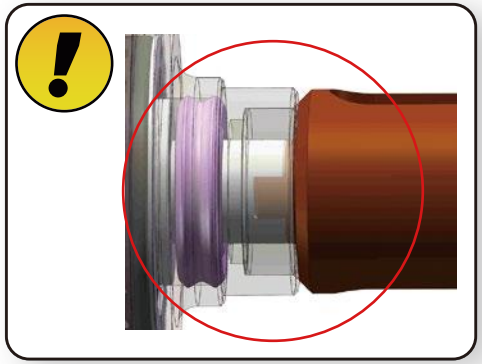

1.2



AMOUNT OF OIL IN THE DIFFS

Use a digital scale to measure the exact amount of oil in the diff.

Differential weight with volume compensators = 8.4 grams



1.3

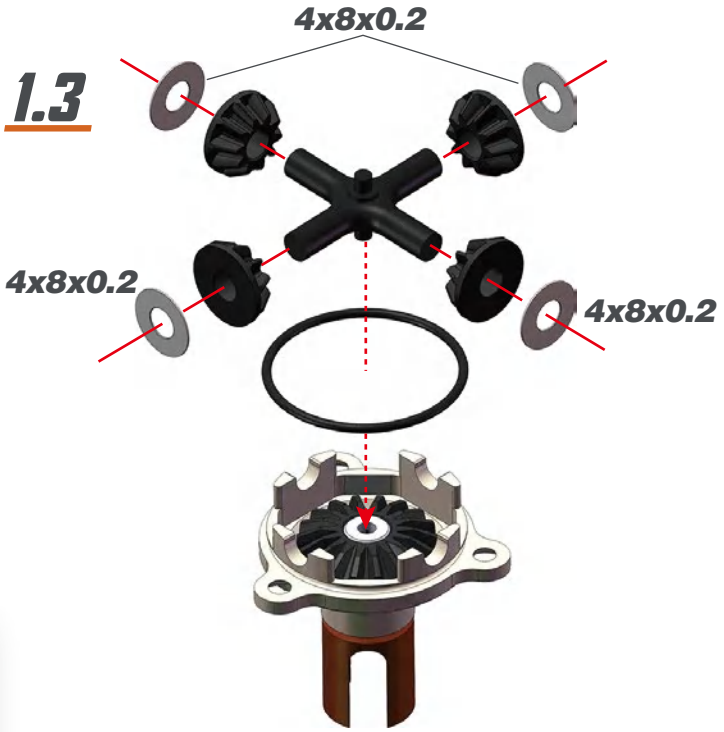



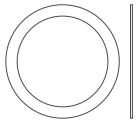
12x15x0.25


5x8x2.5


M2.5x5


4x8x0.2

STEP 1

1.4

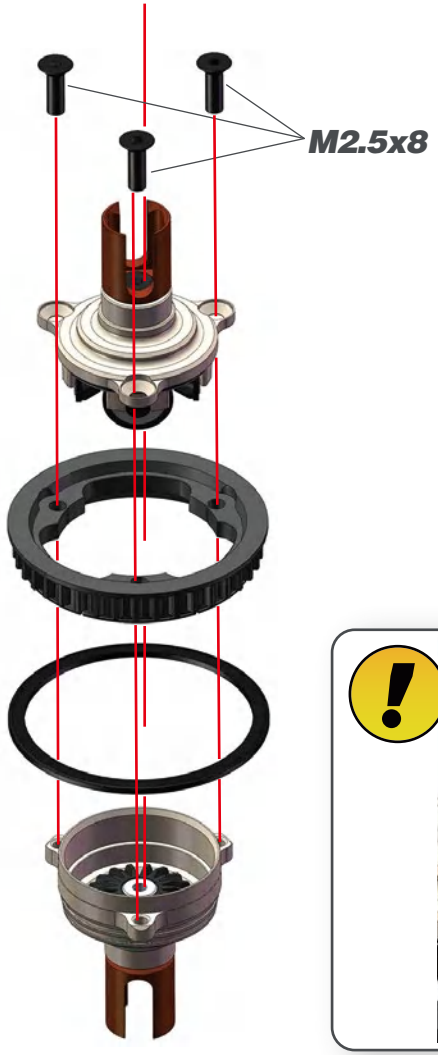

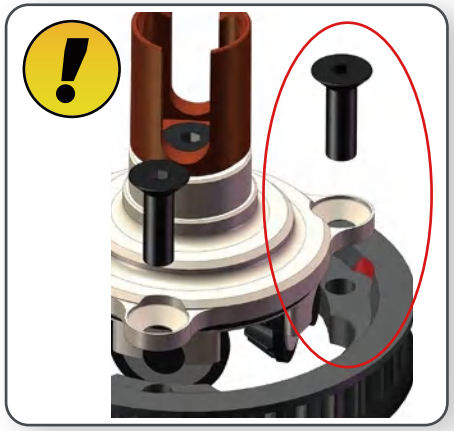

STEP 2 SOLID AXLE BAG

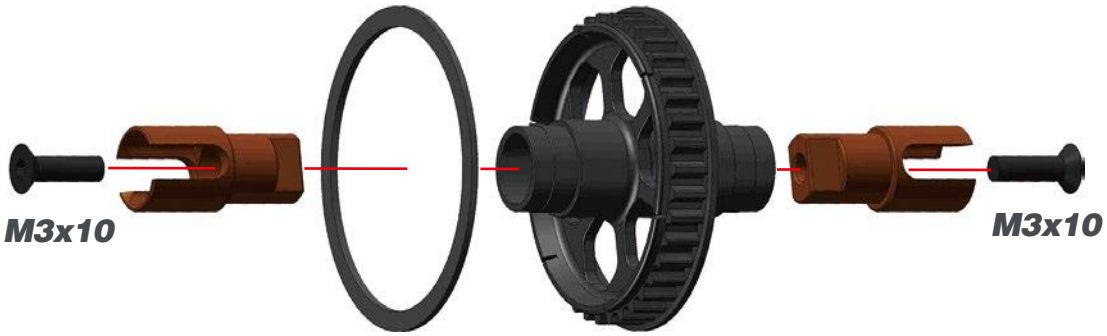

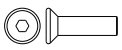
M2.5x8


M3x10

STEP 3 DJC BAG

3.1



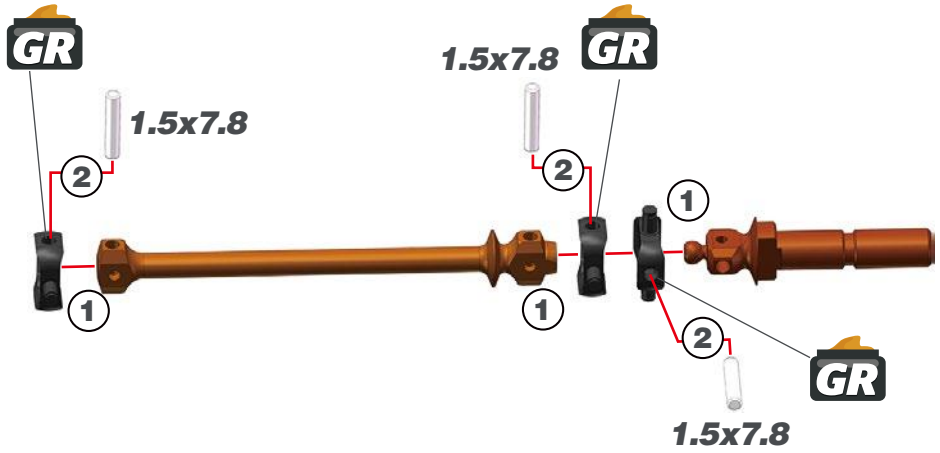



402070 DJC driveshaft BB alu (2)

3.2

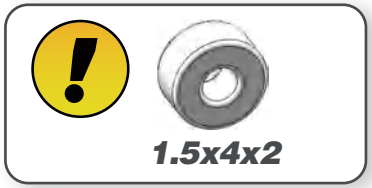

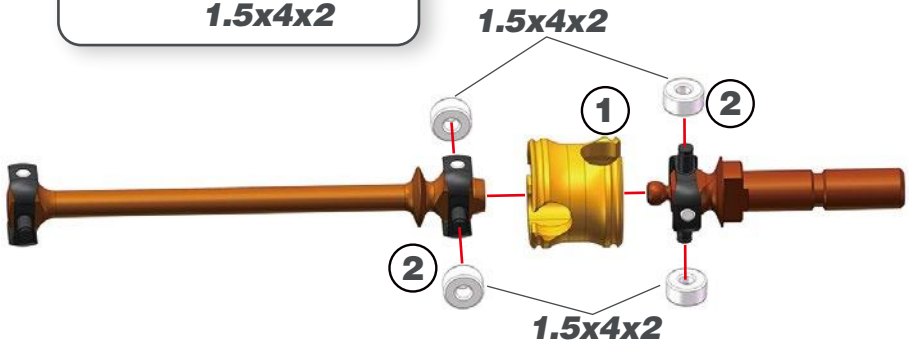

3.3



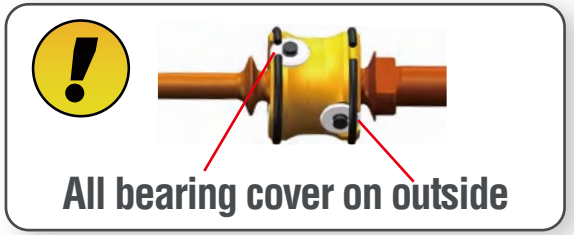

1.5x7.8

1.5x4x2

STEP 4 CVD BAG

4.1



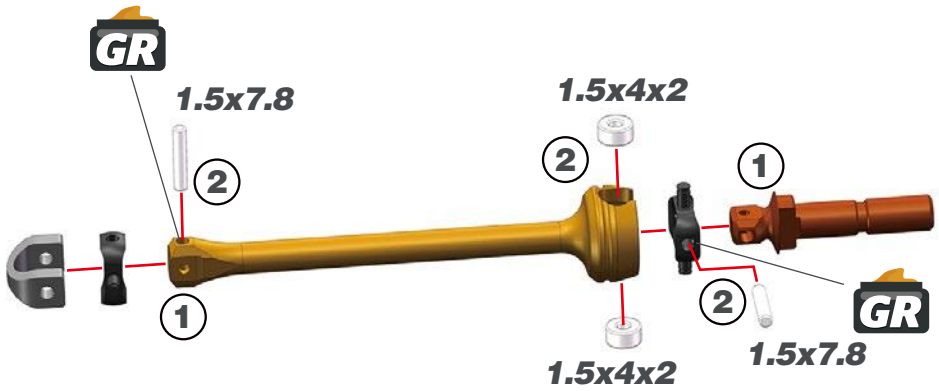

4.2





1.5x7.8

1.5x4x2

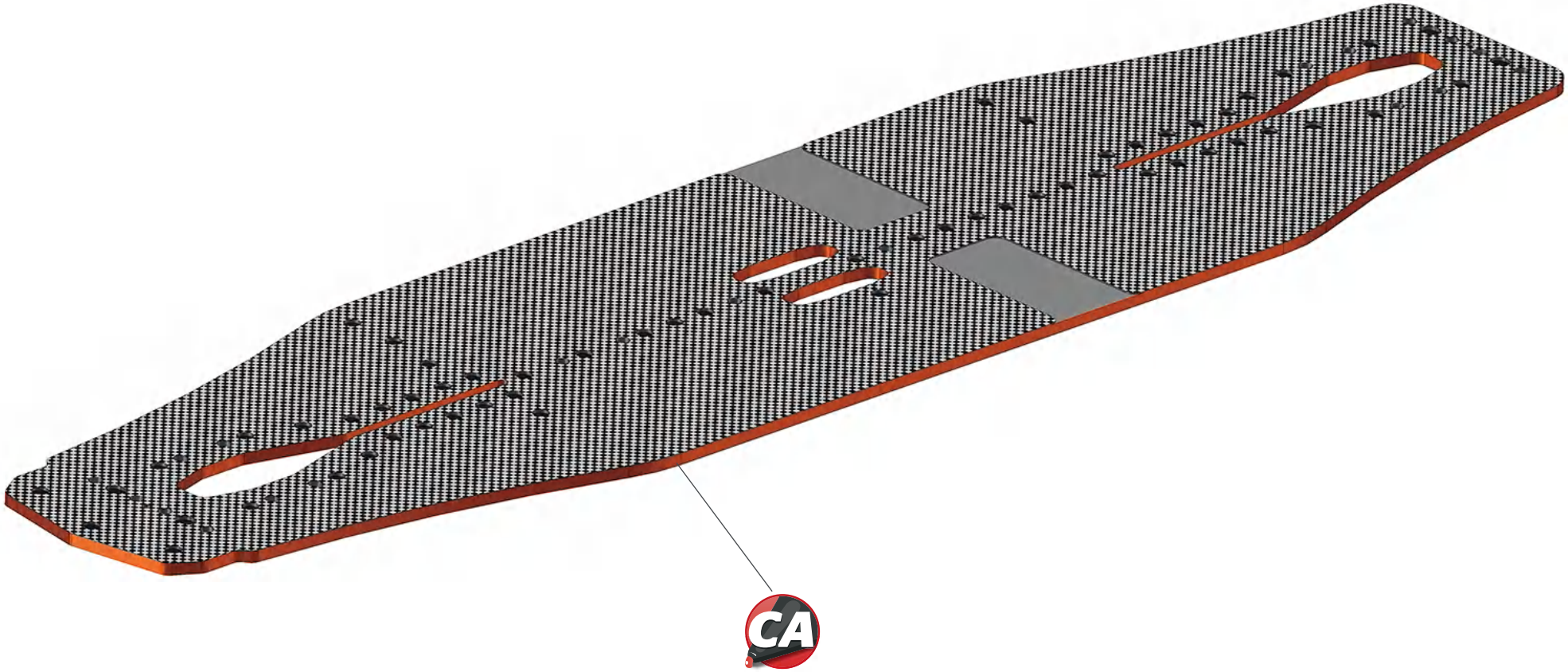
CA

STEP 5 BAG 1

5.1 FRONT/REAR

4X

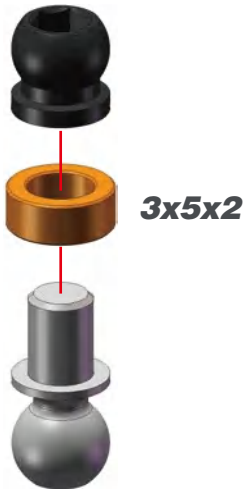



5.2 FRONT



5.3 REAR

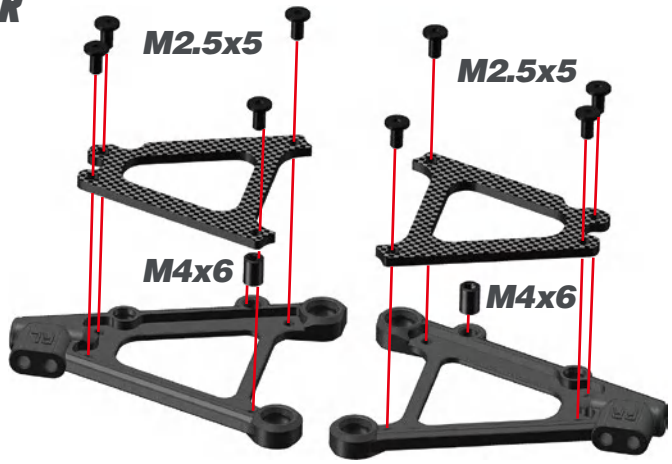

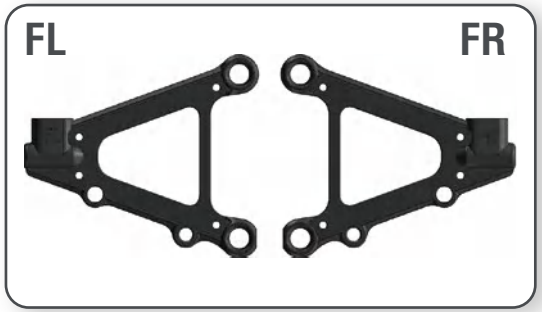

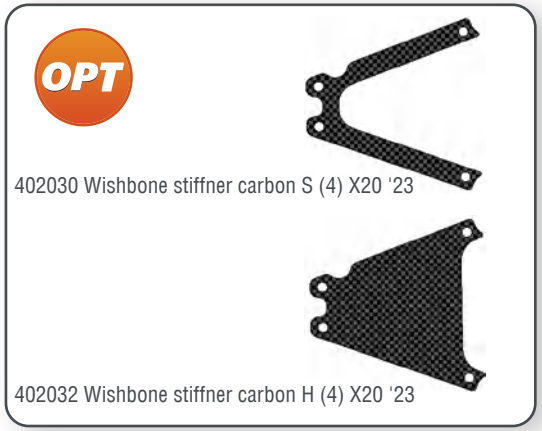

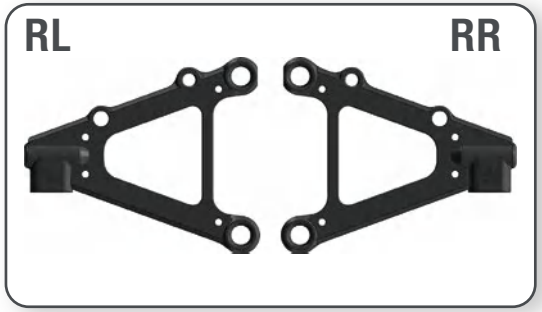

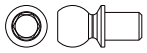







STEP 6

6.1 FRONT

Front 0 degree



Rear 0 degree

Front 1 degree toe out



Rear 1 degree toe in

OPT



402024 suspension insert lw 0.5deg (4) X20 '23

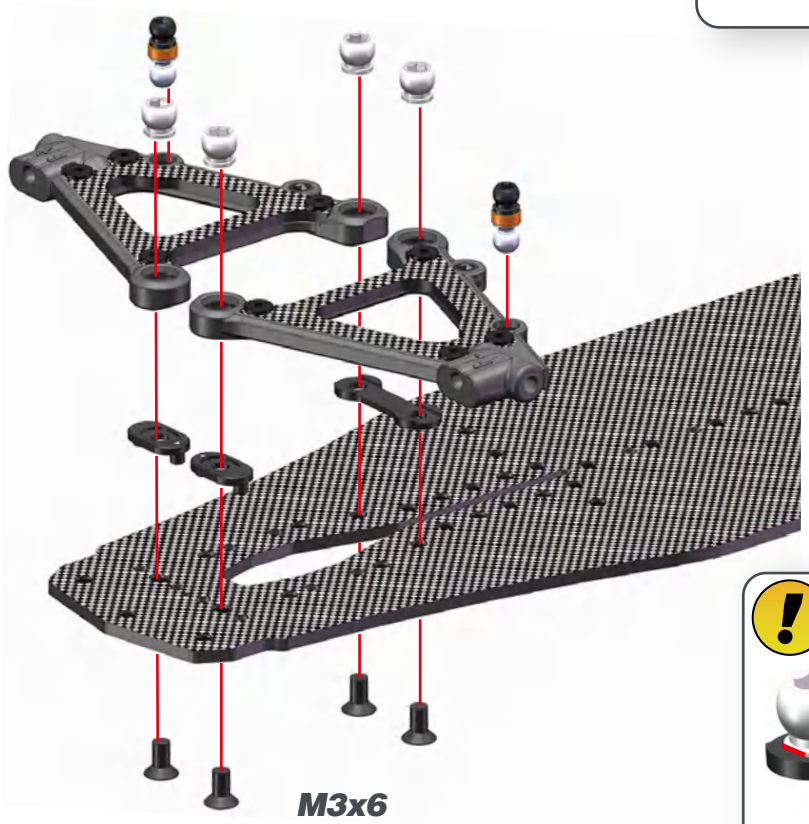

6.2 REAR

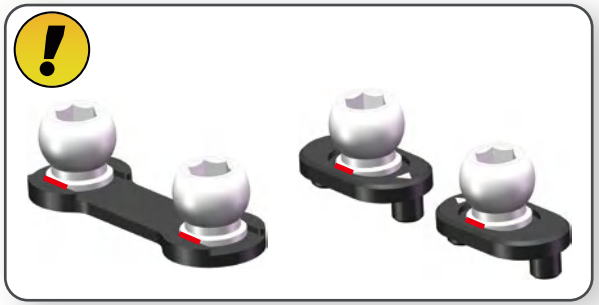

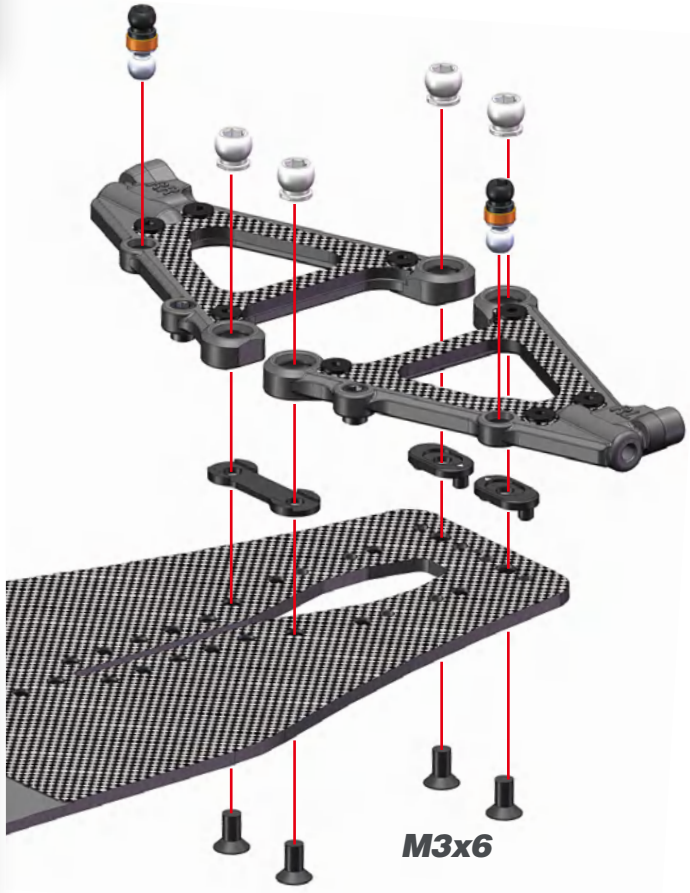





STEP 7 BAG 2

7.1 FRONT

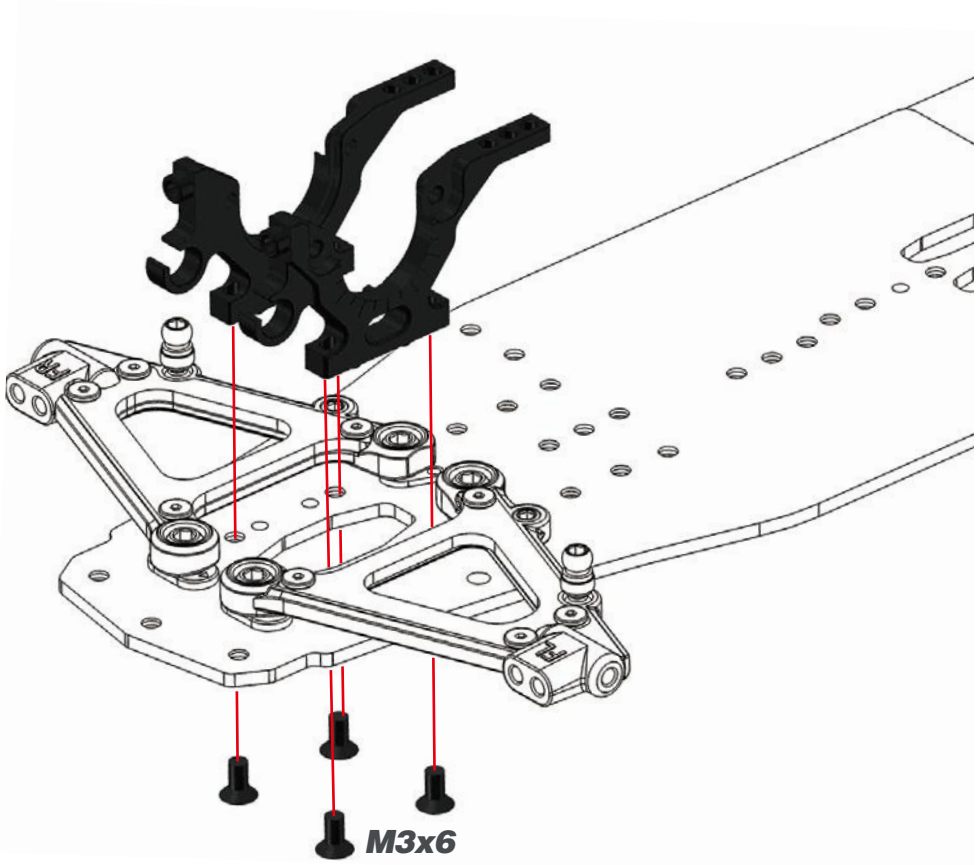

M3x6

7.2 REAR

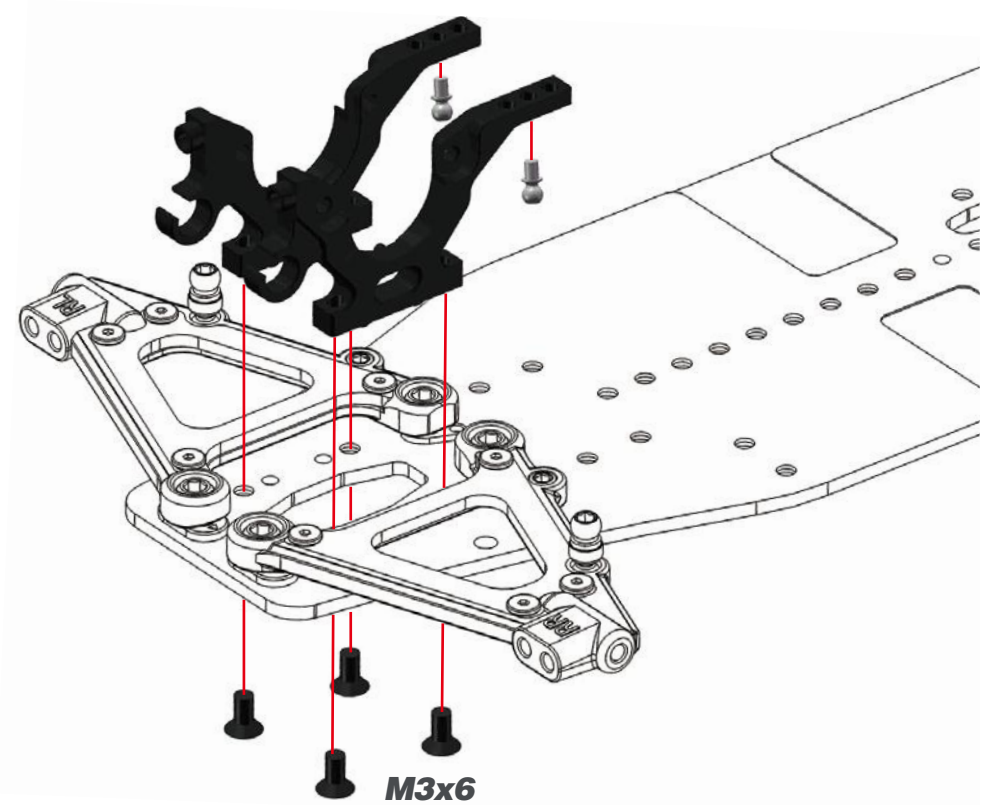

PIVOTBALL M3x4

M3x6

STEP 8

8.1

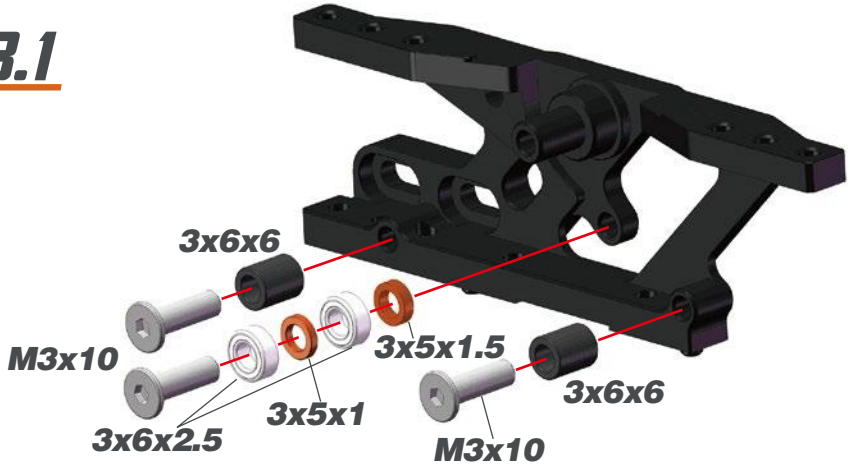

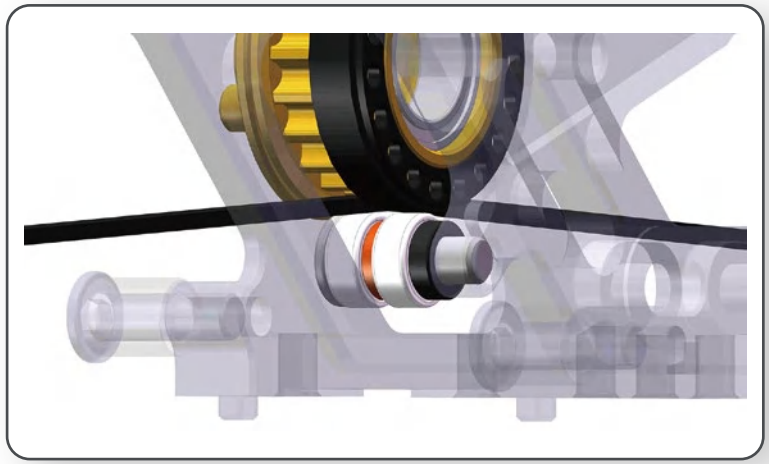

8.2

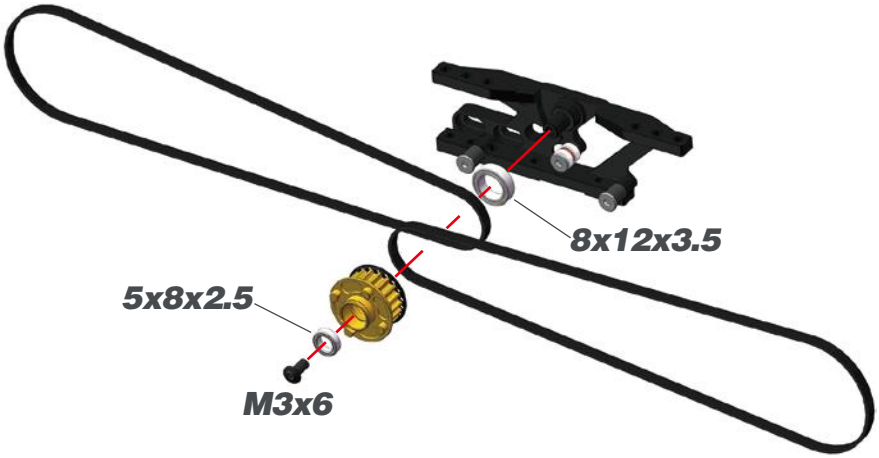

8.3

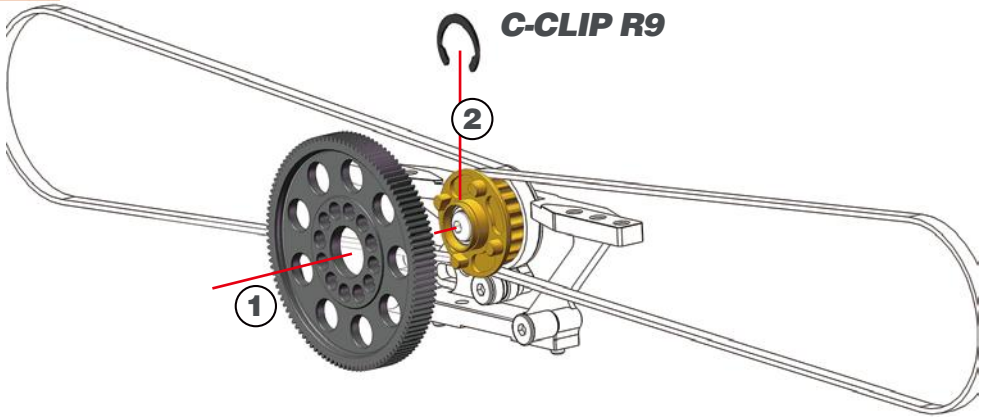



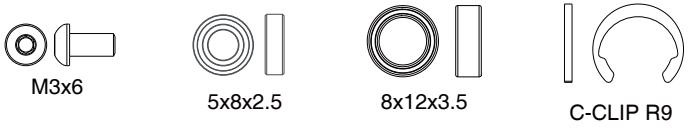

STEP 9

9.1

OPT



401917 Bearing excenter fr/rr (4) alu X20

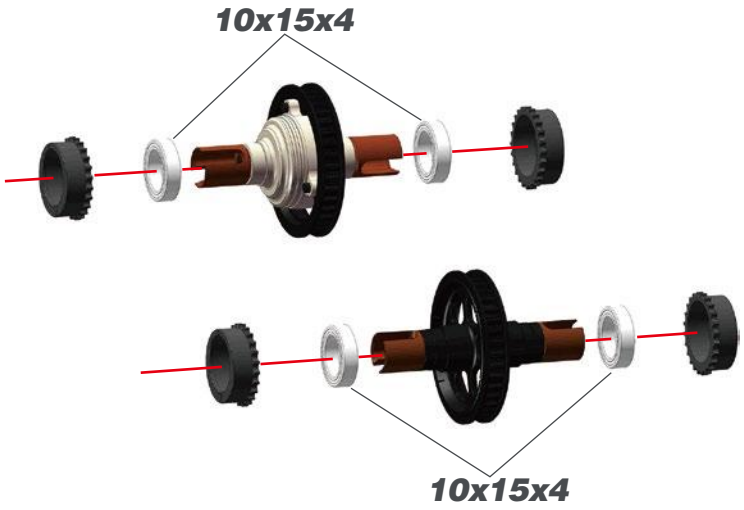

9.2

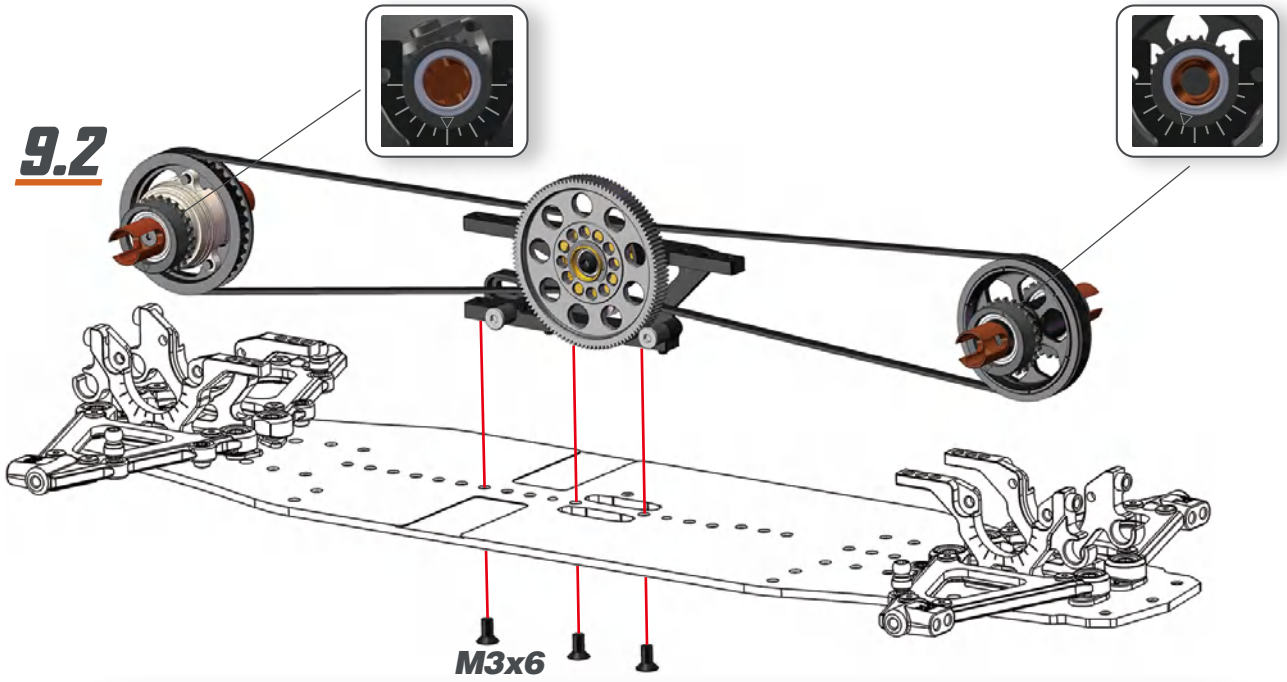

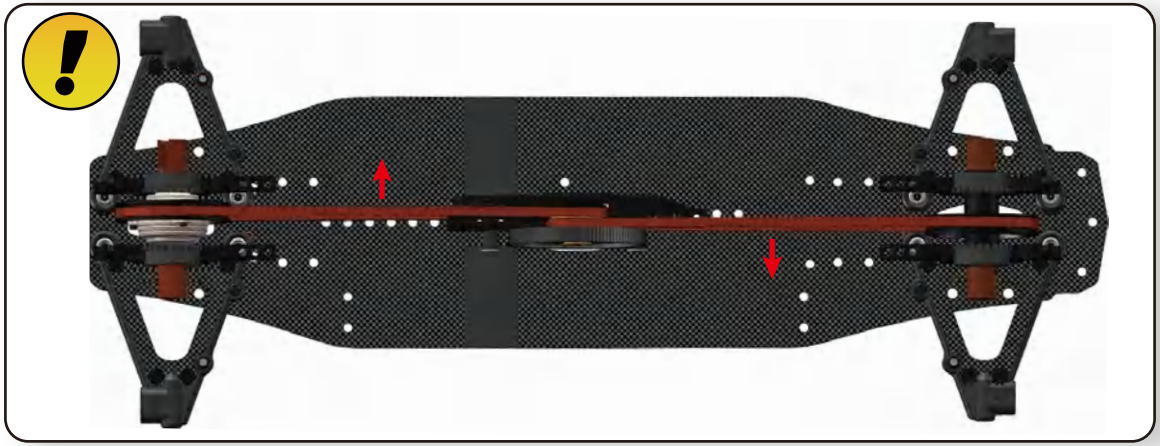

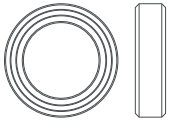

10x15x4



M3x6

10.1 REAR

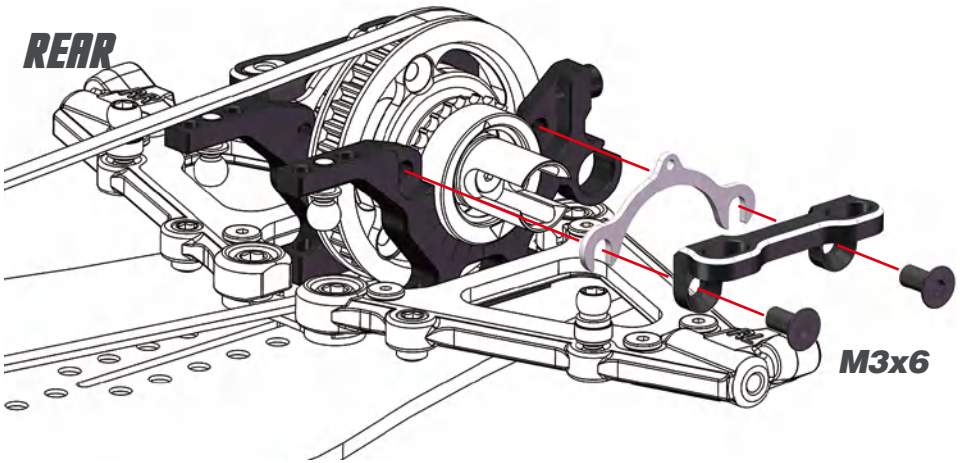

10.2

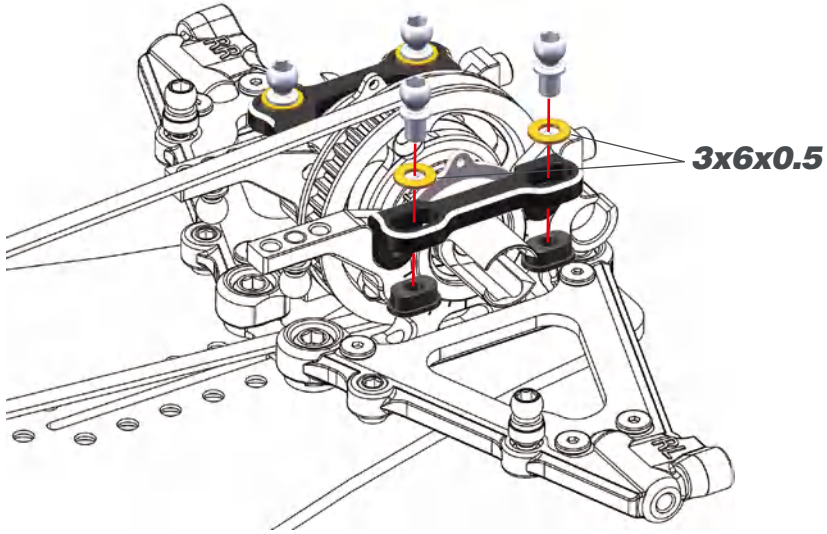

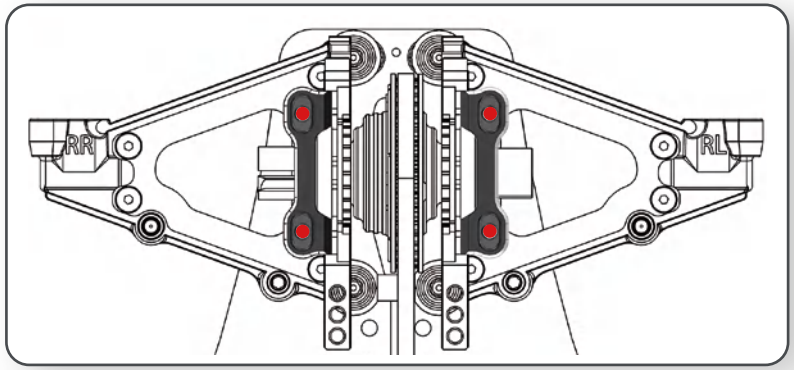

Lower arm 0 toe in	Rear	Lower arm 1 toe in
	3° OPT 5°	
	2° OPT 4°	
	1° OPT 3°	
✓	0° 2°	✓
	1° OPT 1°	
	2° OPT 0°	
	3° OPT 1°	

PIVOTBALL M3x4 M3x6 3x6x0.5

STEP 11

11.1

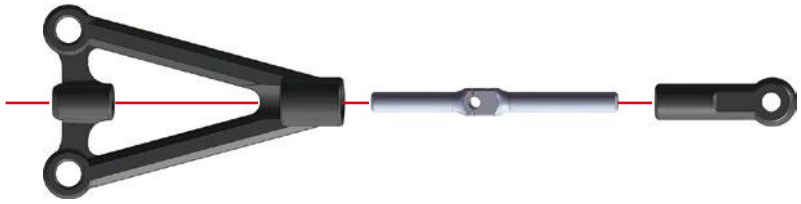

2X

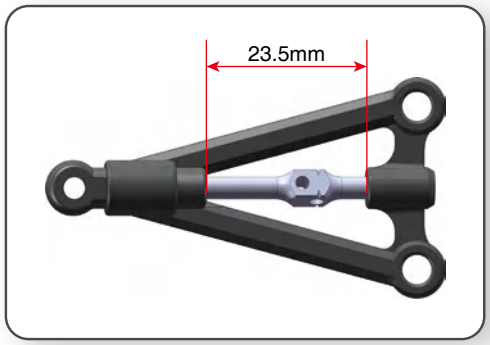

11.2

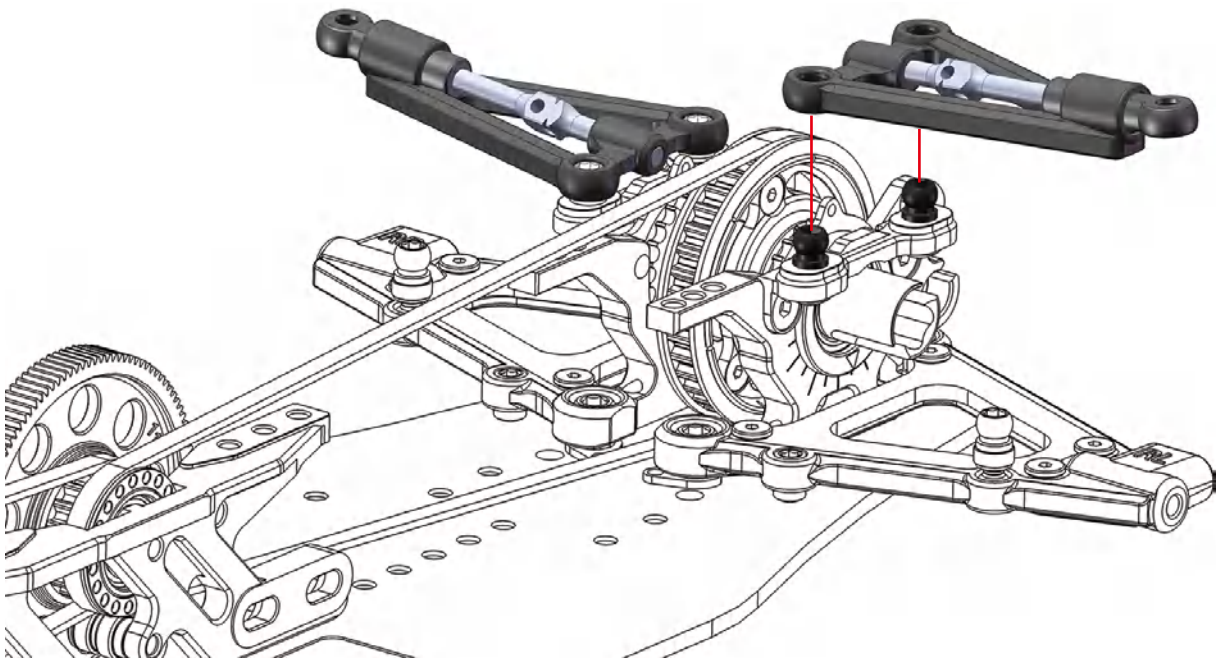

STEP 12

R=L

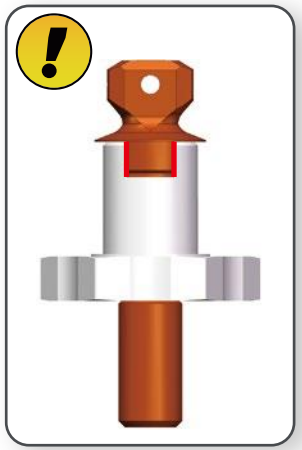

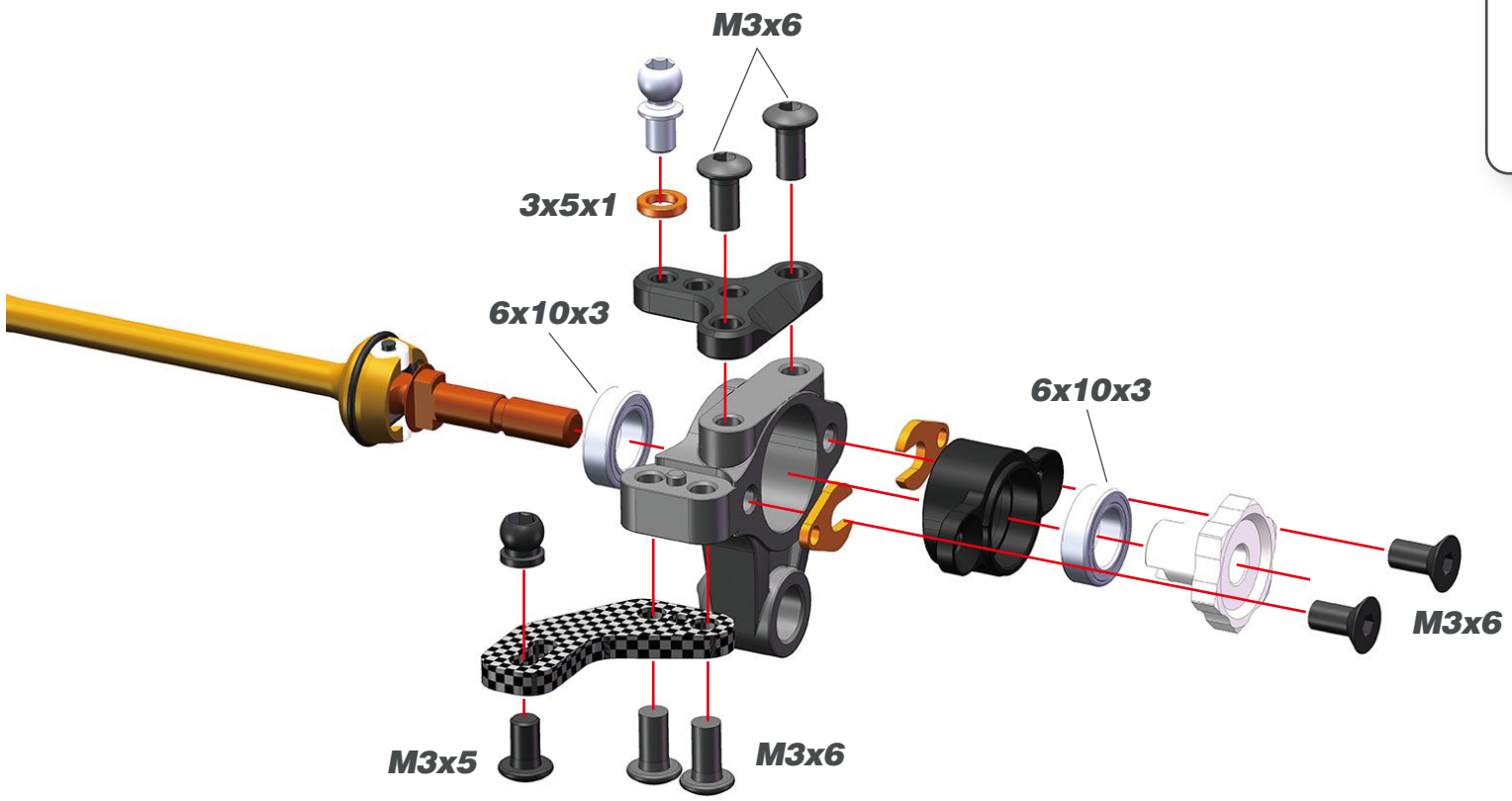
M3x6
3x5x1
6x10x3
6x10x3
M3x6
M3x5
M3x6


PIVOTBALL M3x4
6x10x3
3x5x1
M3x5
M3x6
M3x6

STEP 13

13.1

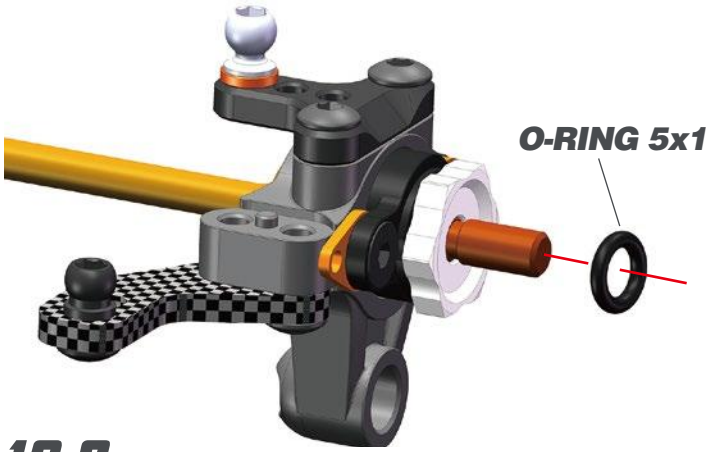

13.2



13.3

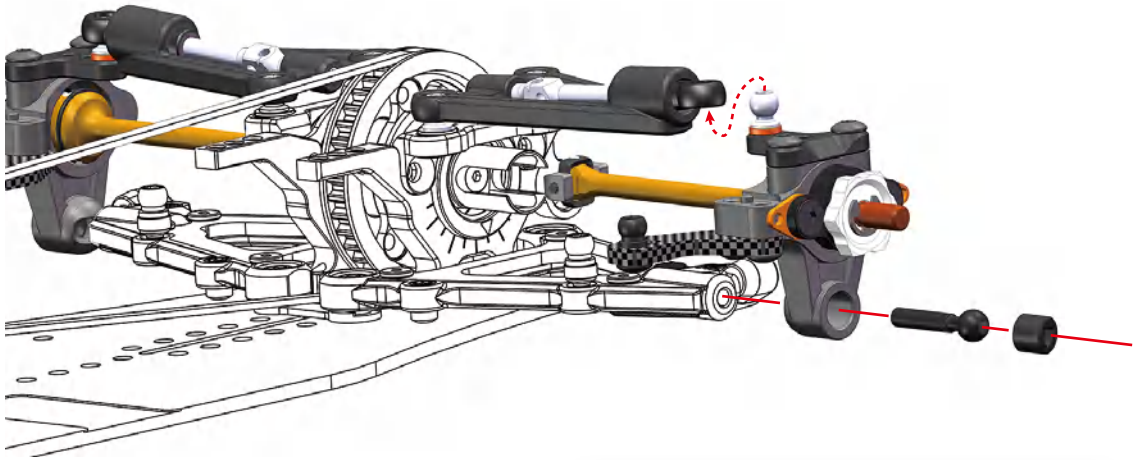

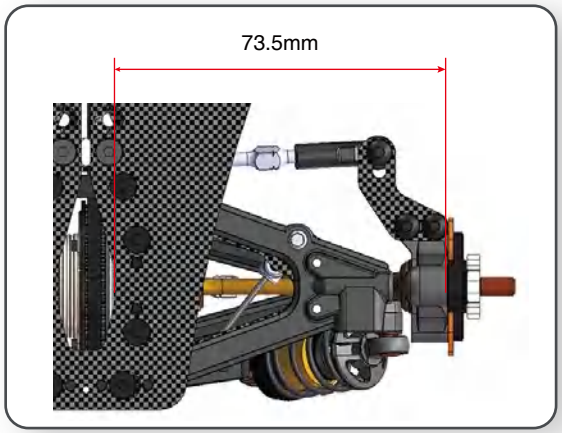

STEP 14

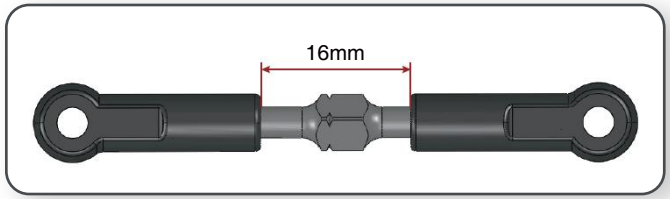

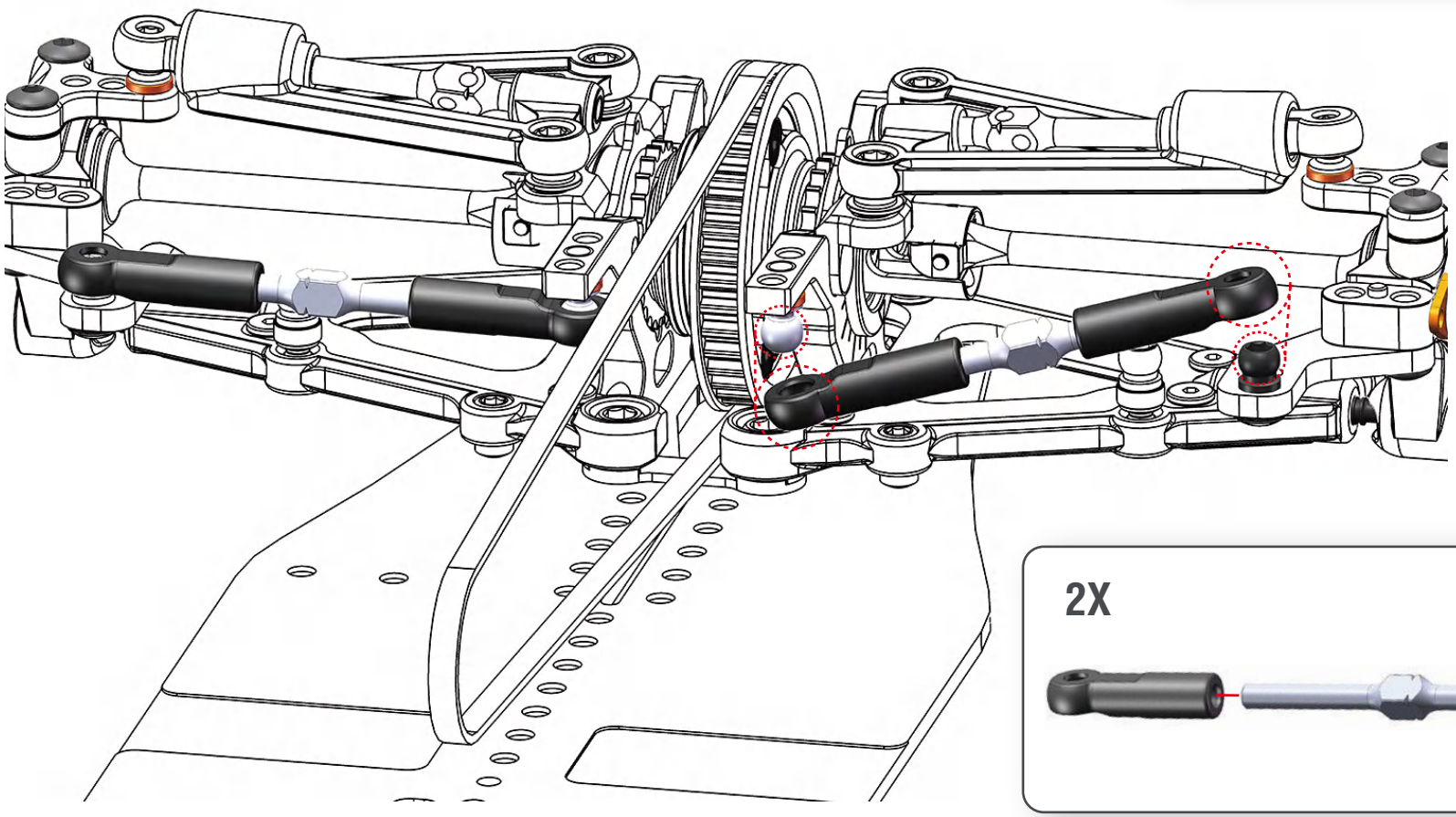

2X

STEP 15 BAG 4

15.1 FRONT

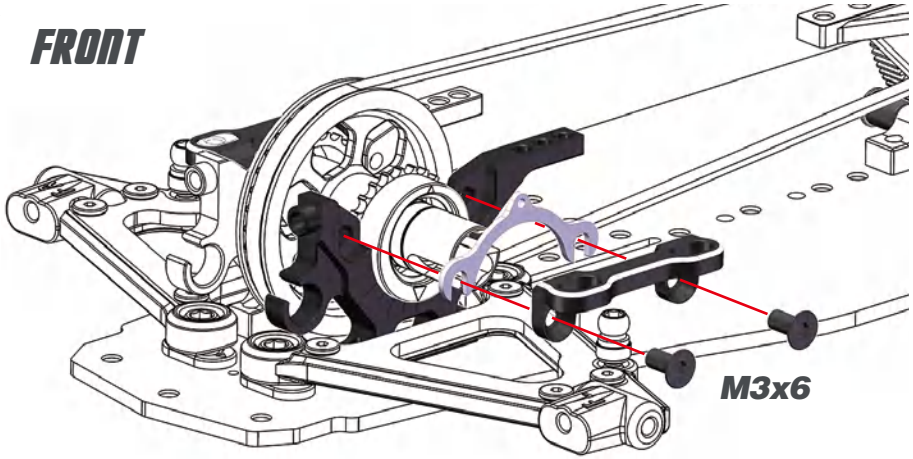

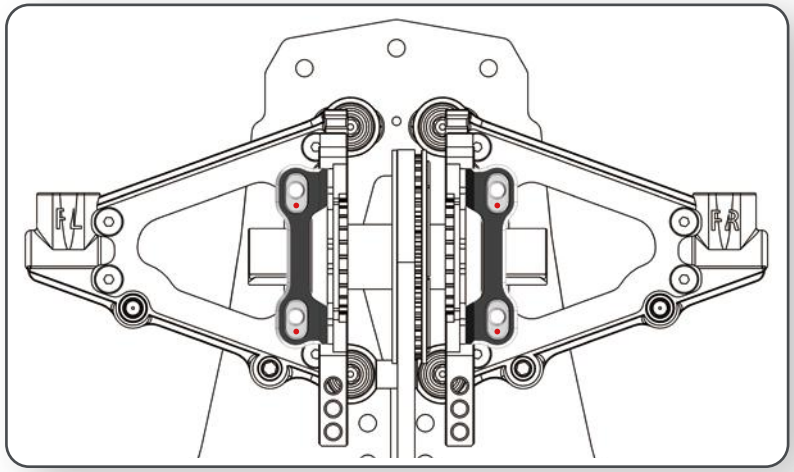

15.2

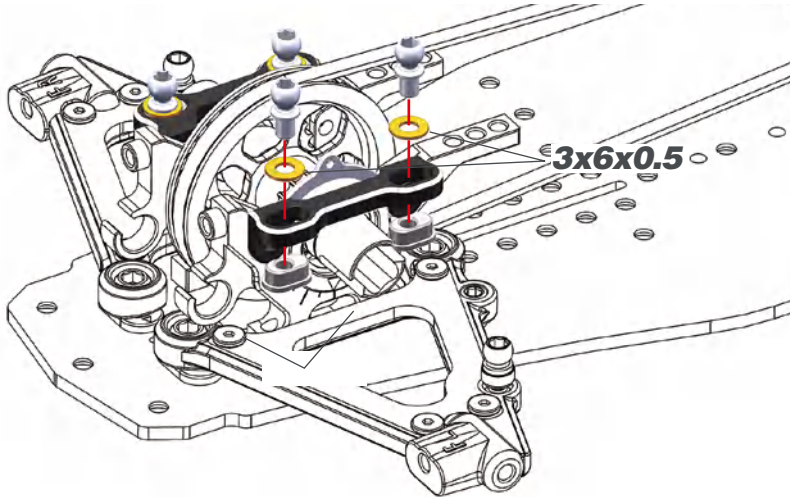

Lower arm 0 toe, caster angle:	Front		Lower arm 1 toe, caster angle:	
	2°	OPT	0°	
	3°	OPT	1°	
✓	4°		2°	
	5°	OPT	3°	
	6°		4°	✓
	7°	OPT	5°	
	8°	OPT	6°	


PIVOTBALL M3x4


M3x6


3x6x0.5

STEP 16

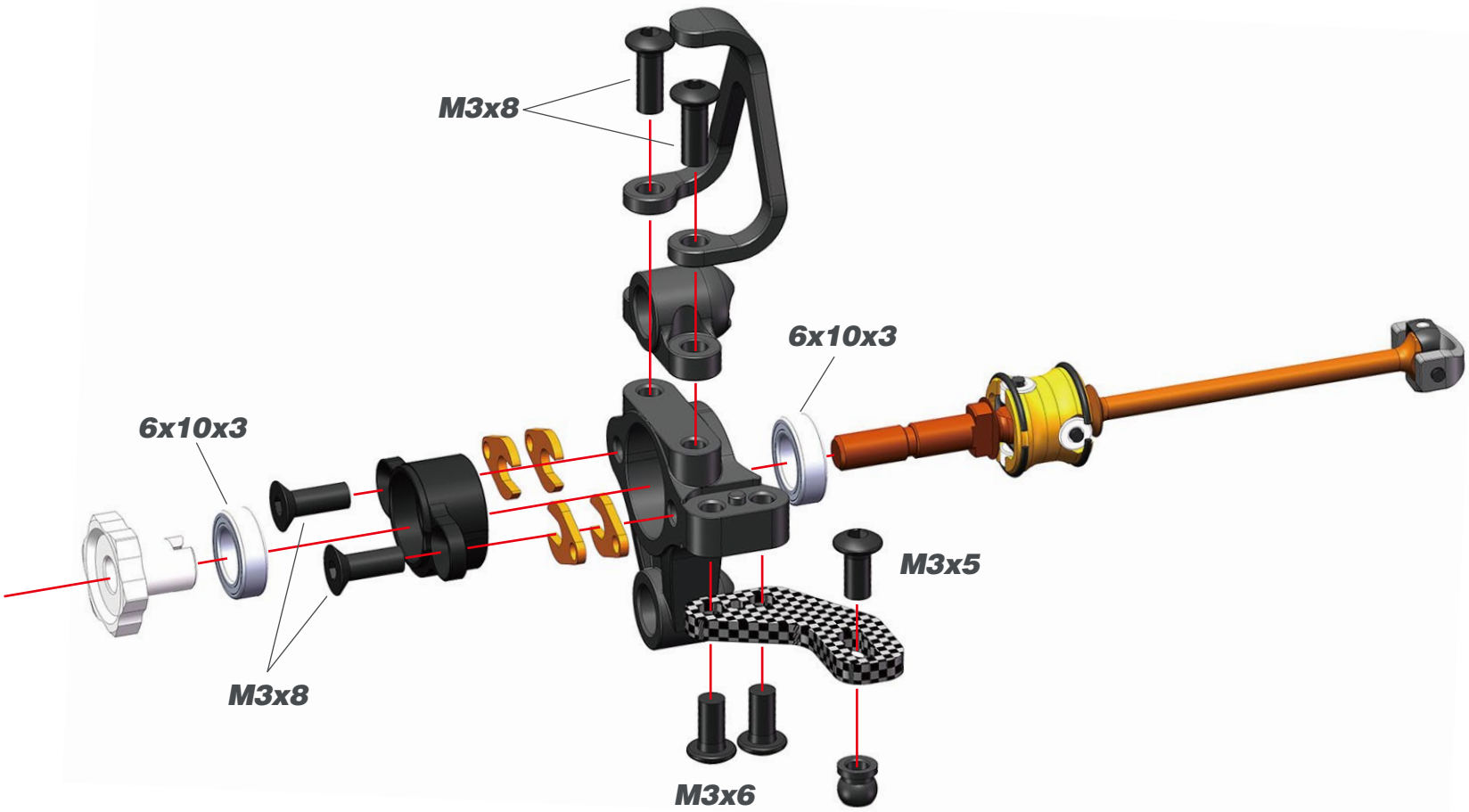
M3x8
6x10x3
6x10x3
M3x5
M3x8
M3x6

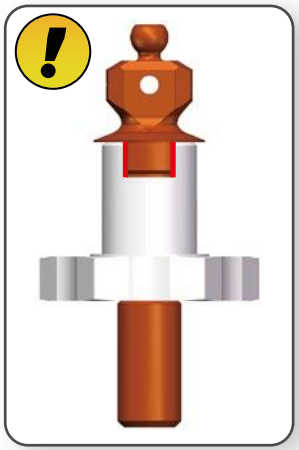

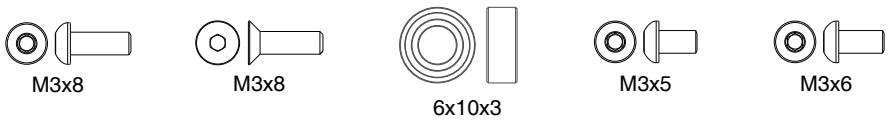
M3x8
M3x8
6x10x3
M3x5
M3x6

STEP 17

17.1



O-RING 5x1

17.2

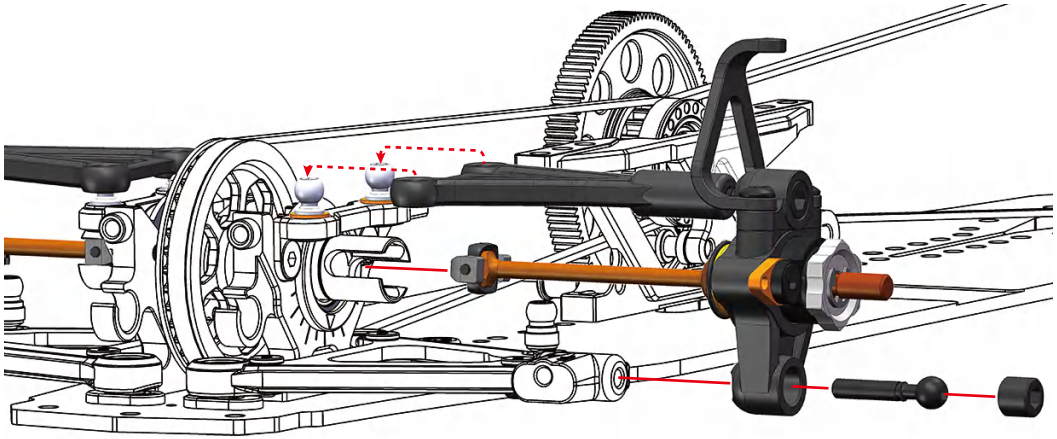

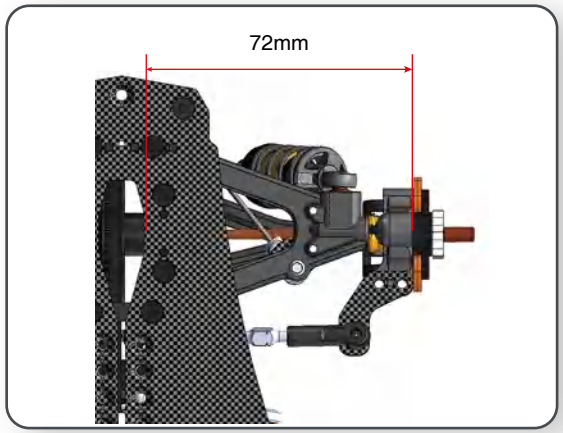

18.1 FRONT & REAR

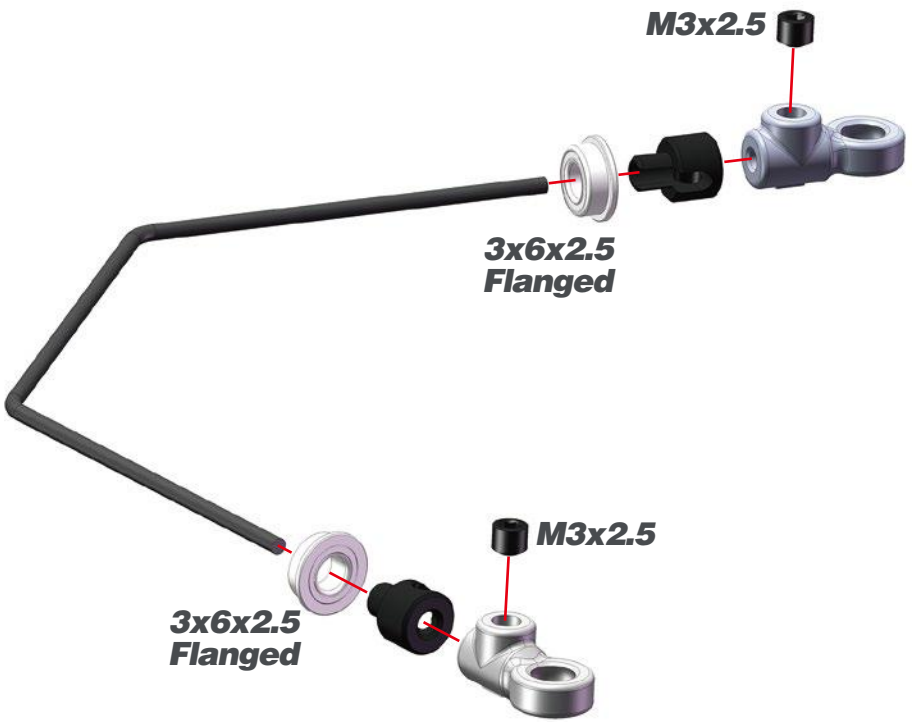

18.2 REAR

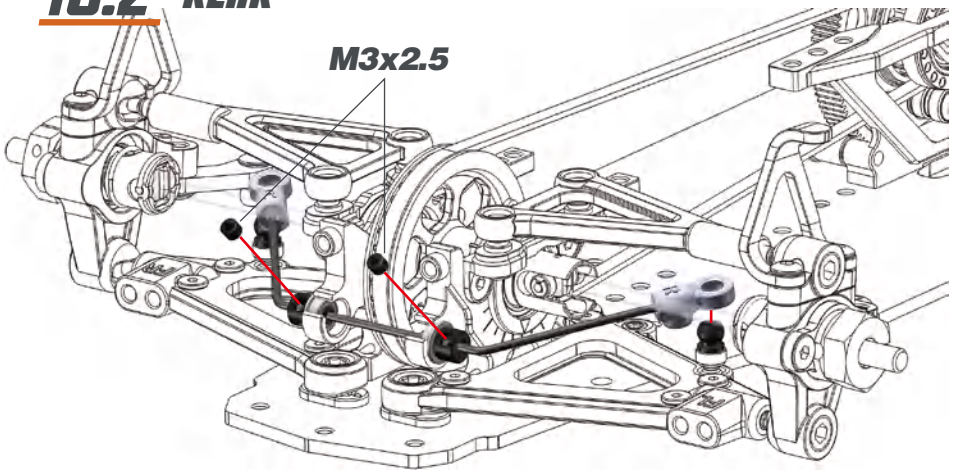

18.3 FRONT

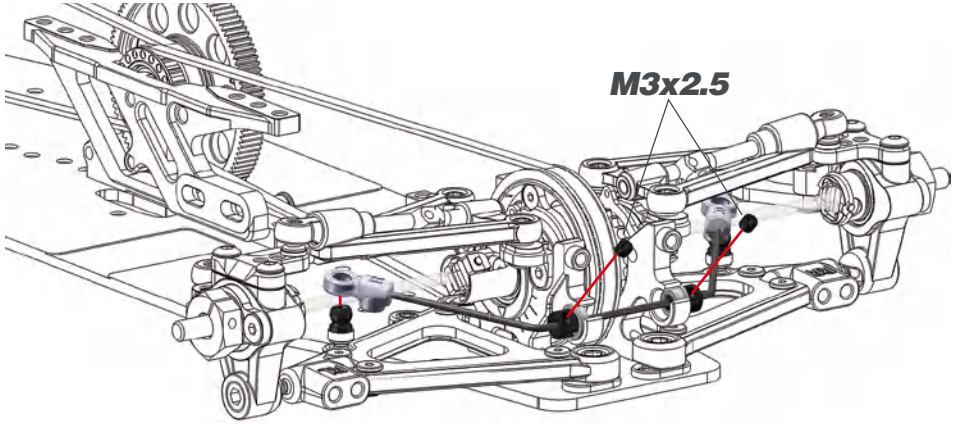

3x6x2.5 Flanged

M3x2.5

M3x2.5

STEP 19

19.1

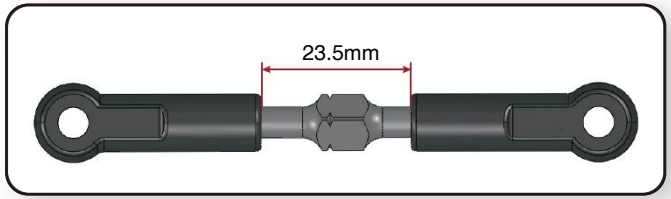

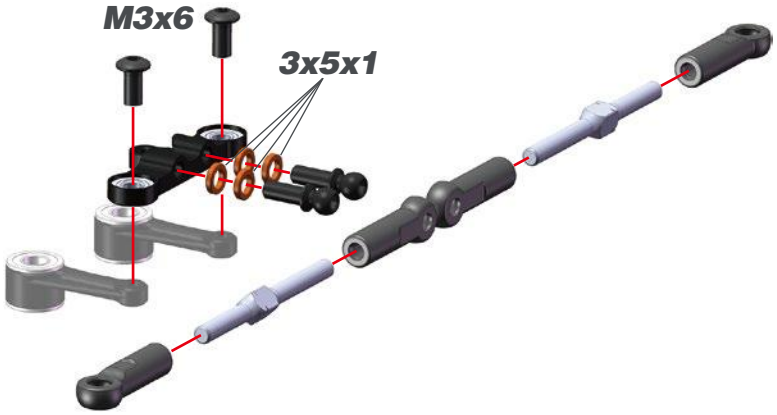

19.2

OPT



402099 Steering lever stiffner X20 '24

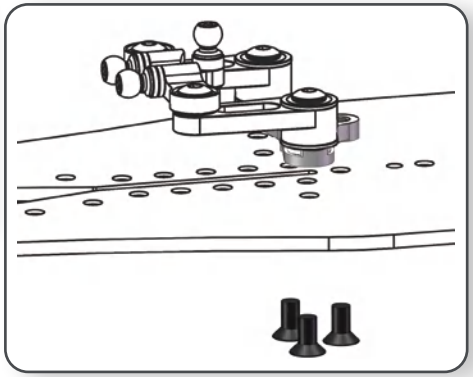

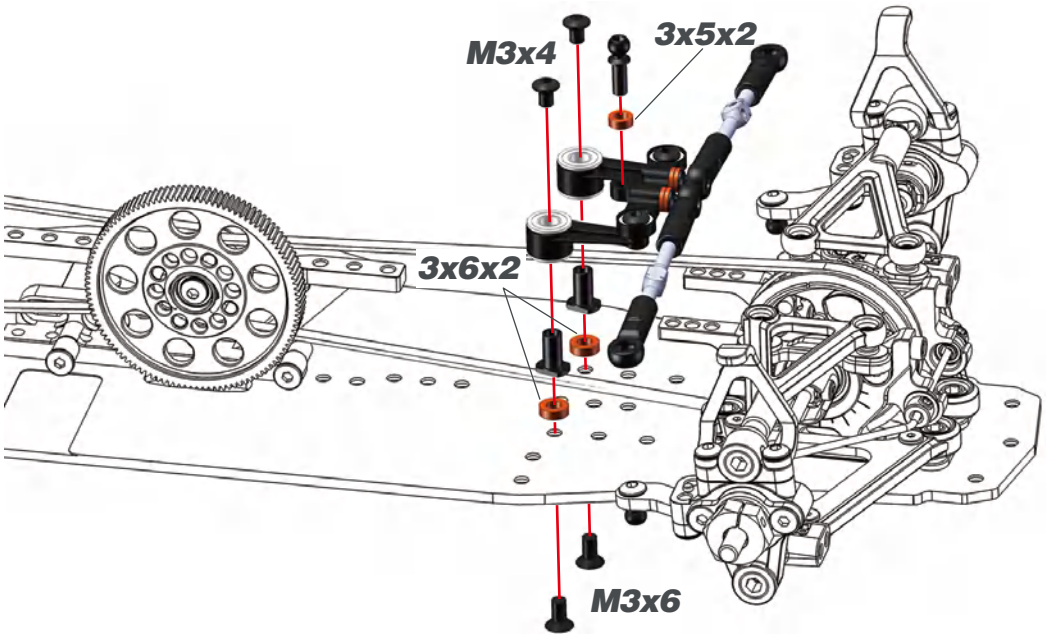

PIVOTBALL M3x7 | 3x5x1 | M3x6

PIVOTBALL M3x7 | 3x5x2 | 3x6x2 | M3x6 | M3x4

STEP 20

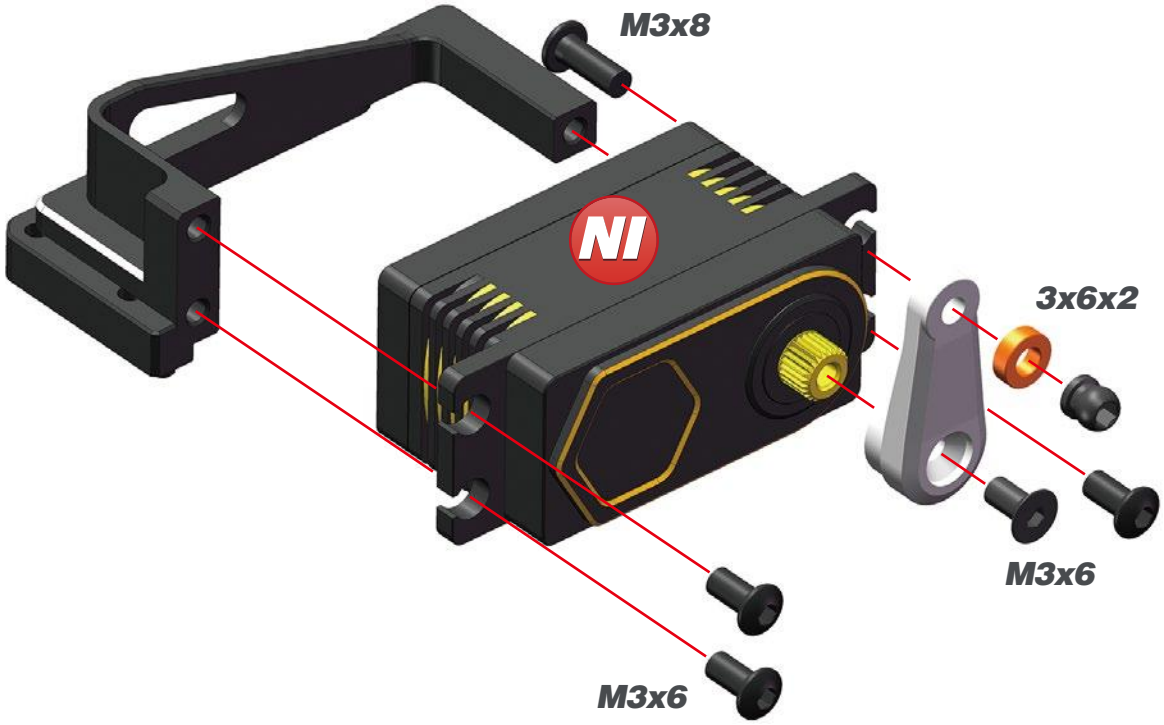

OPT



600290 Servo lever steering 23T alu

600291 Servo lever steering 24T alu

600292 Servo lever steering 25T alu

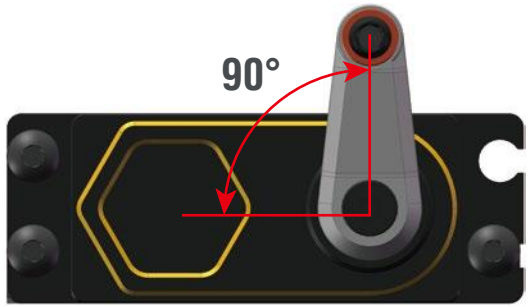



STEP 21

21.1

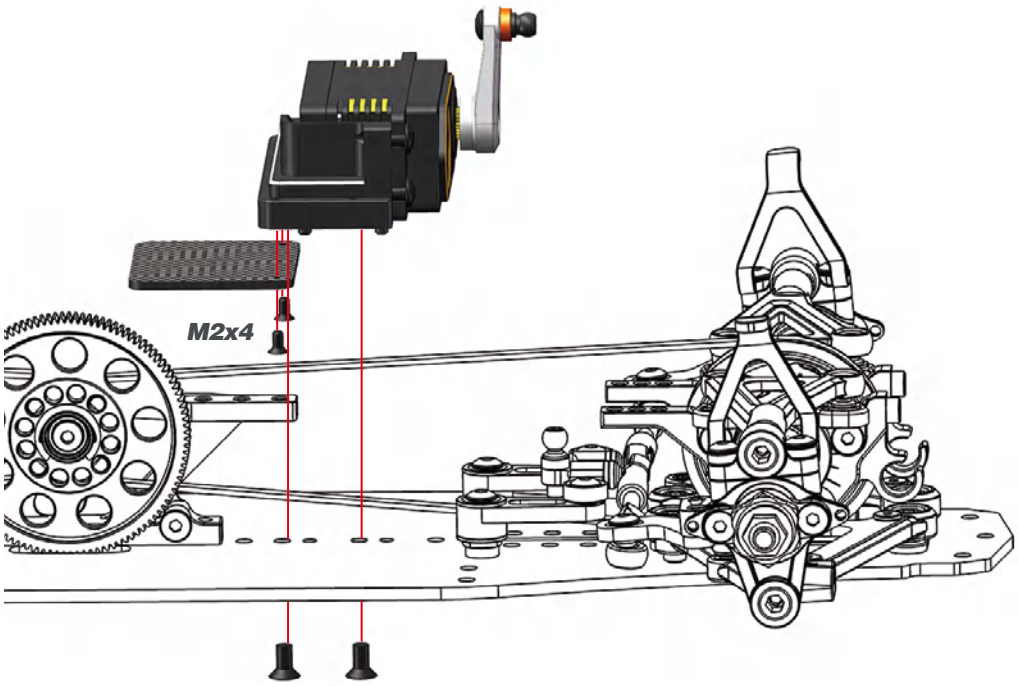

21.2

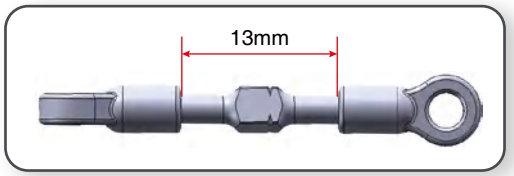



21.3

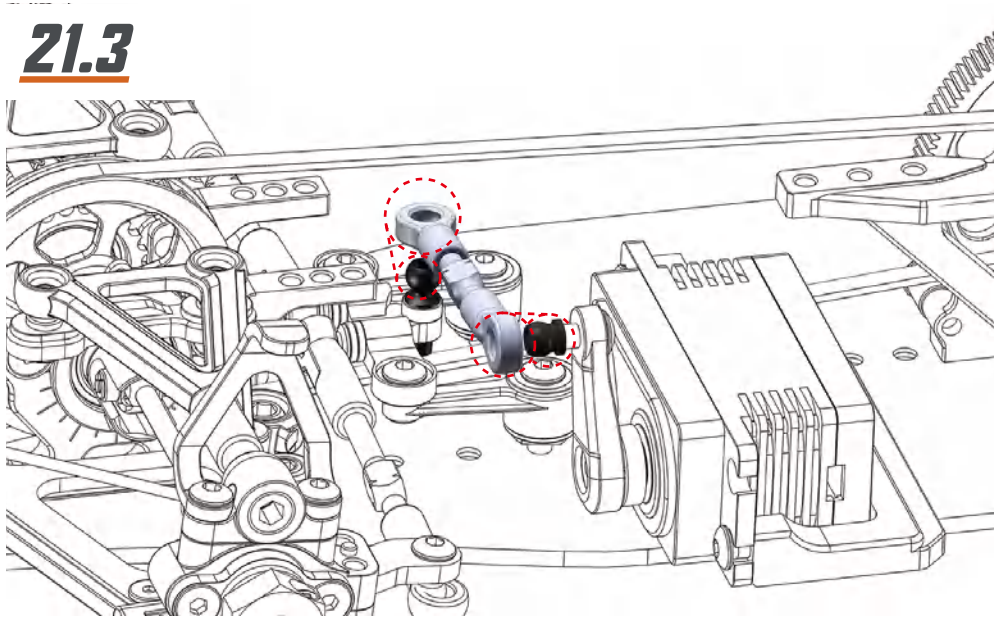


M2x4


M3x6

STEP 22 BAG 6

OPT



402063 Topdeck carbon soft set X20 '23

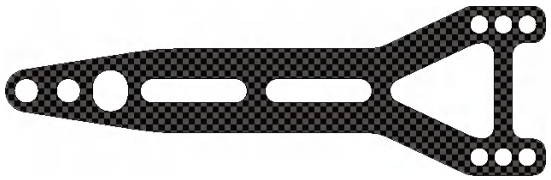

402064 Topdeck carbon hard set X20 '23

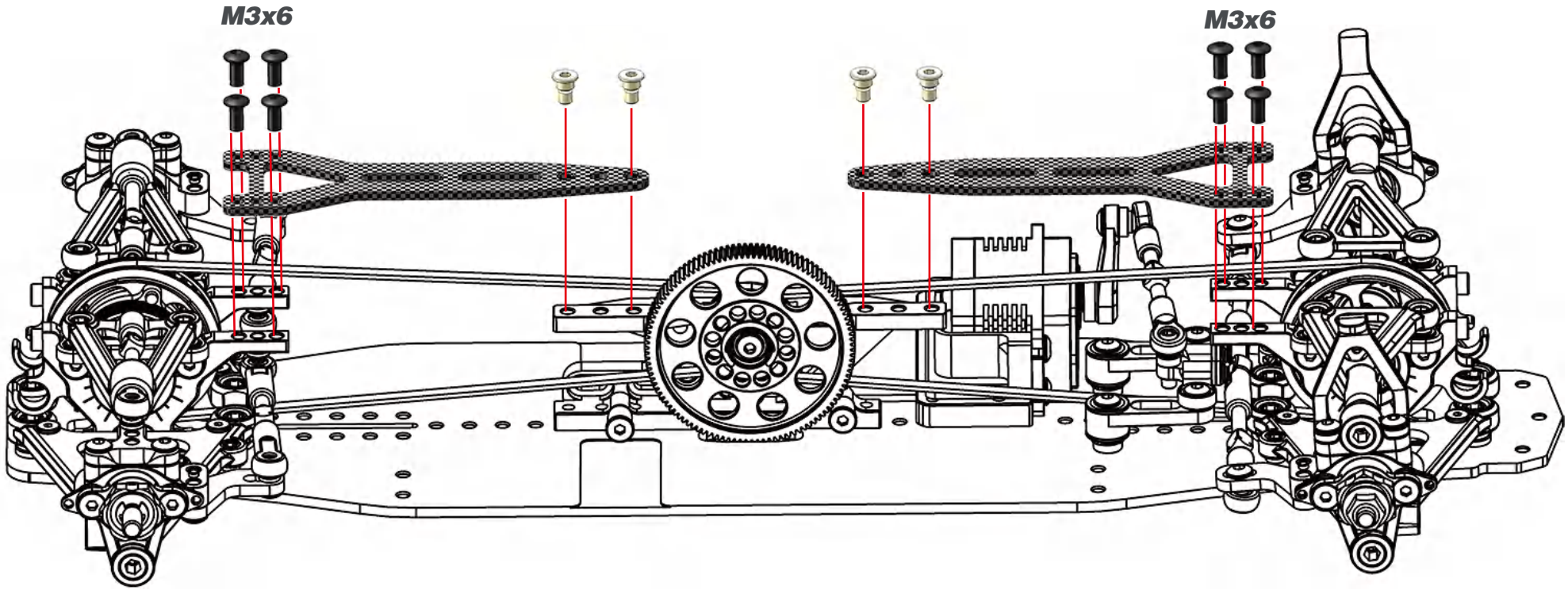



M3x6

STEP 23

R=L

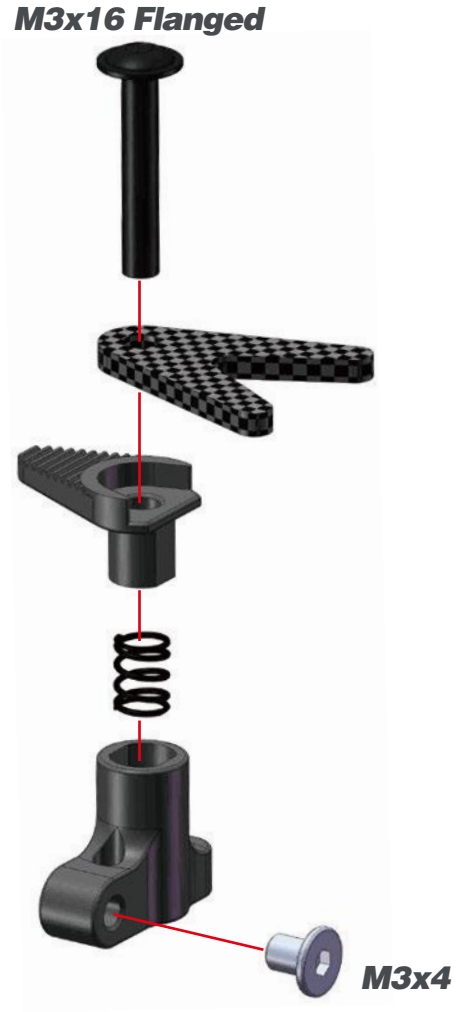

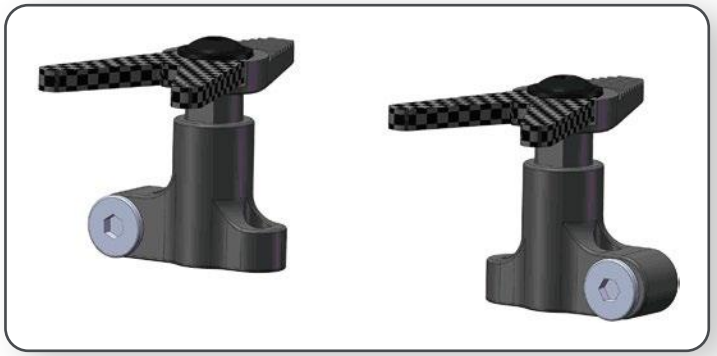

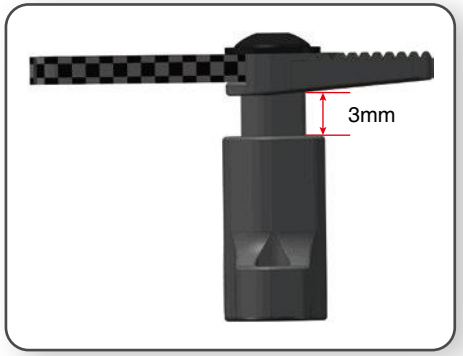

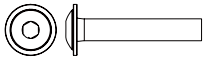
M3x16 Flanged


M3x4

STEP 24

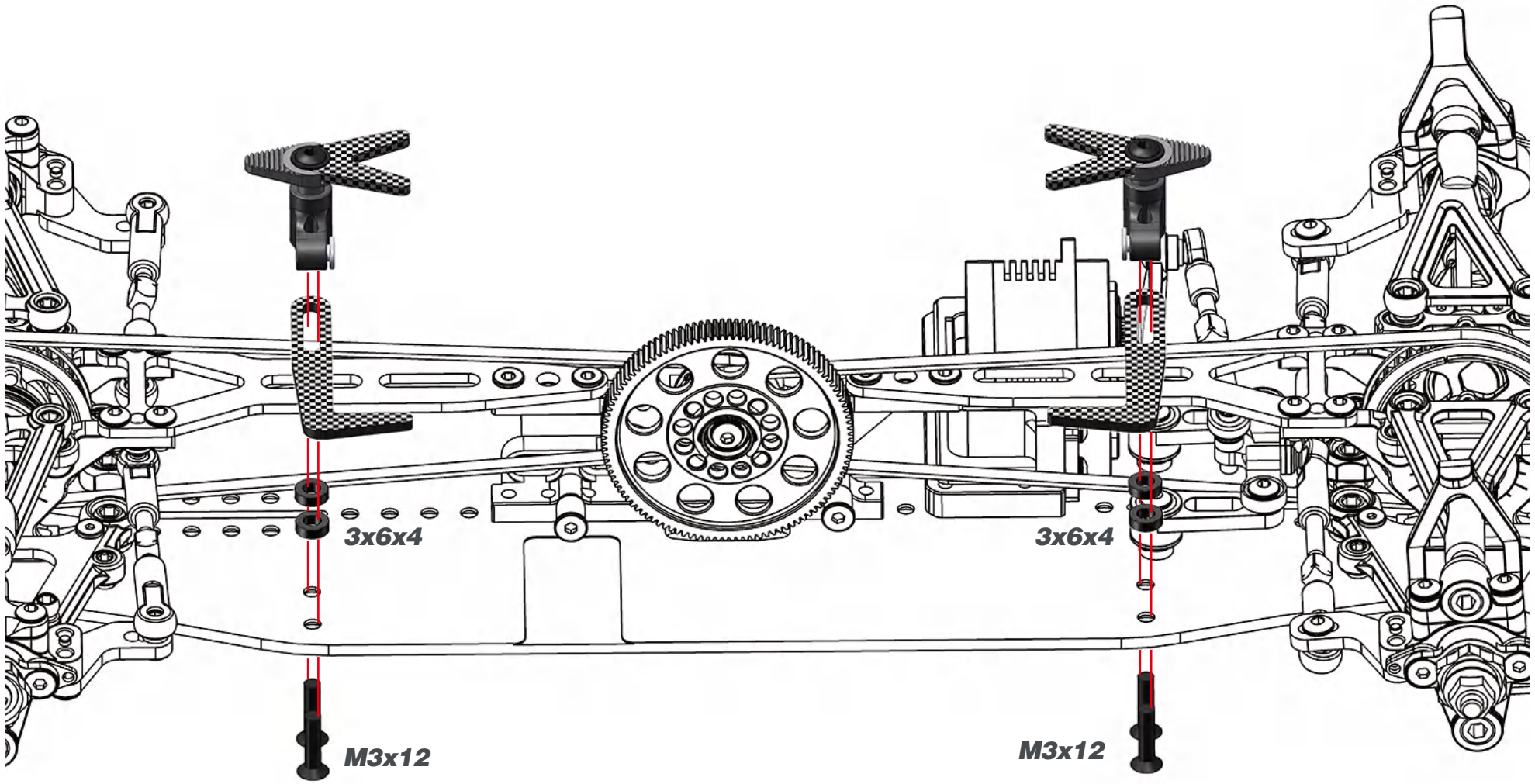



STEP 25 SHOCK BAG

25.1



25.2



25.3



E-CLIP 2.3

25.4

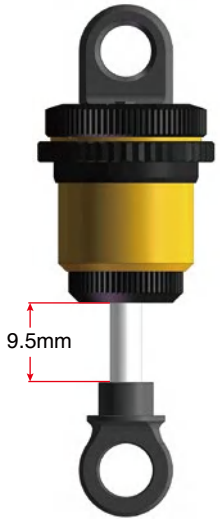

25.5



25.6

160130 is needed to have 5mm or less ride height (RH) but can also be used for a higher RH by turning the spring collar to push the spring down.



Use the low shock spring support 160130 as default
And the 160154 is also included as optional

OPT



160156 Shock spring support low onroad alu (4)

STEP 26 BAG 7

26.1 FRONT

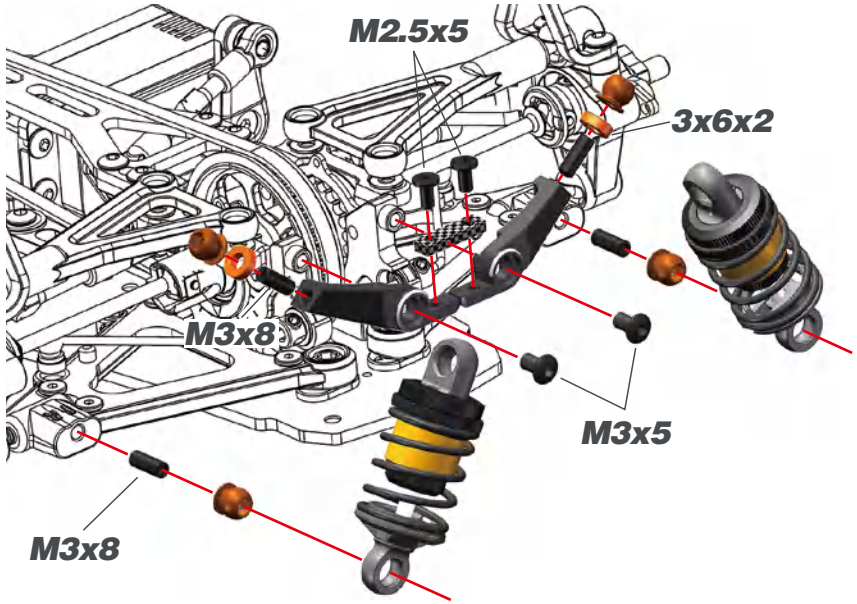

26.2 REAR

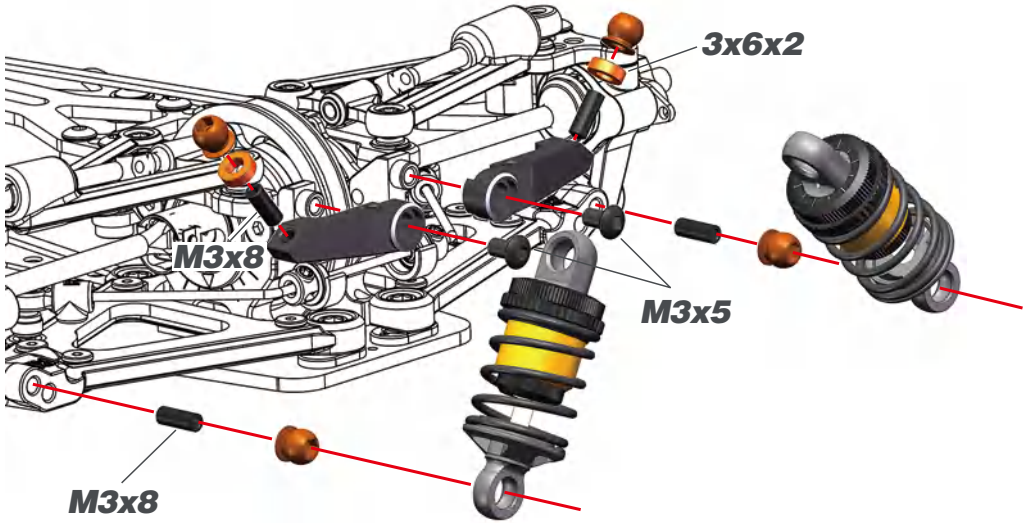



STEP 27

27.1

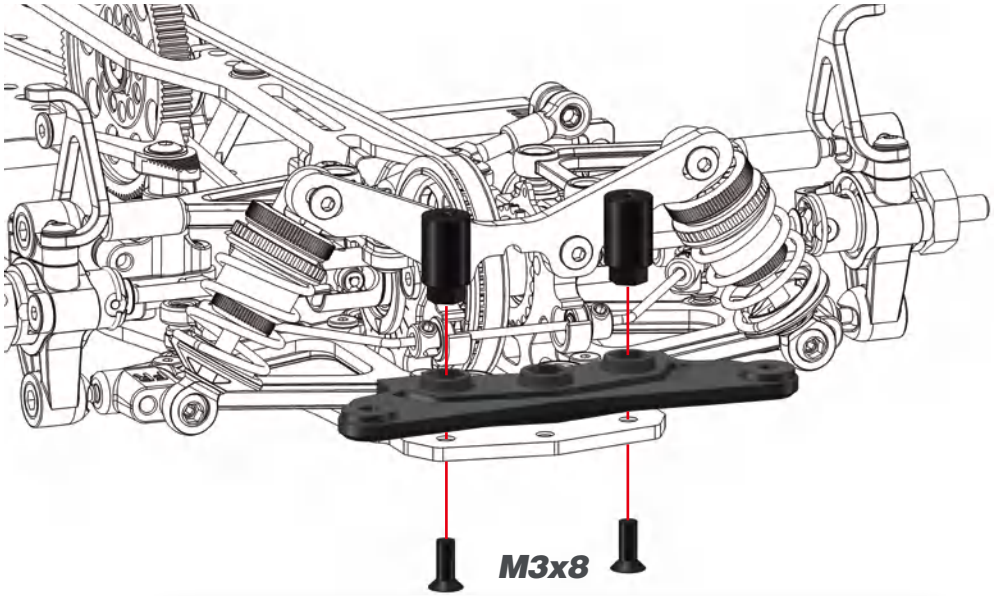

OPT



401954 Bumper top carbon X20 '21

OPT



401602 Body-height fine-tuner alu (4)



M3x8

27.2

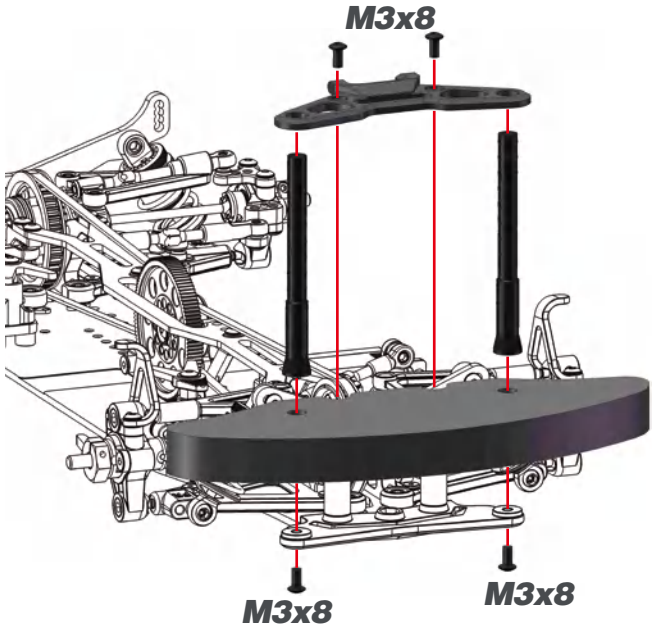



M3x8

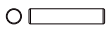

2x10

27.3

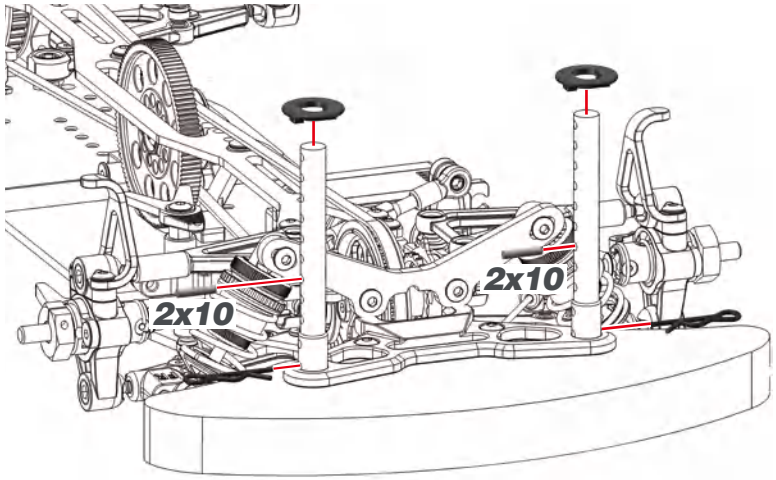

STEP 28

or

28.1

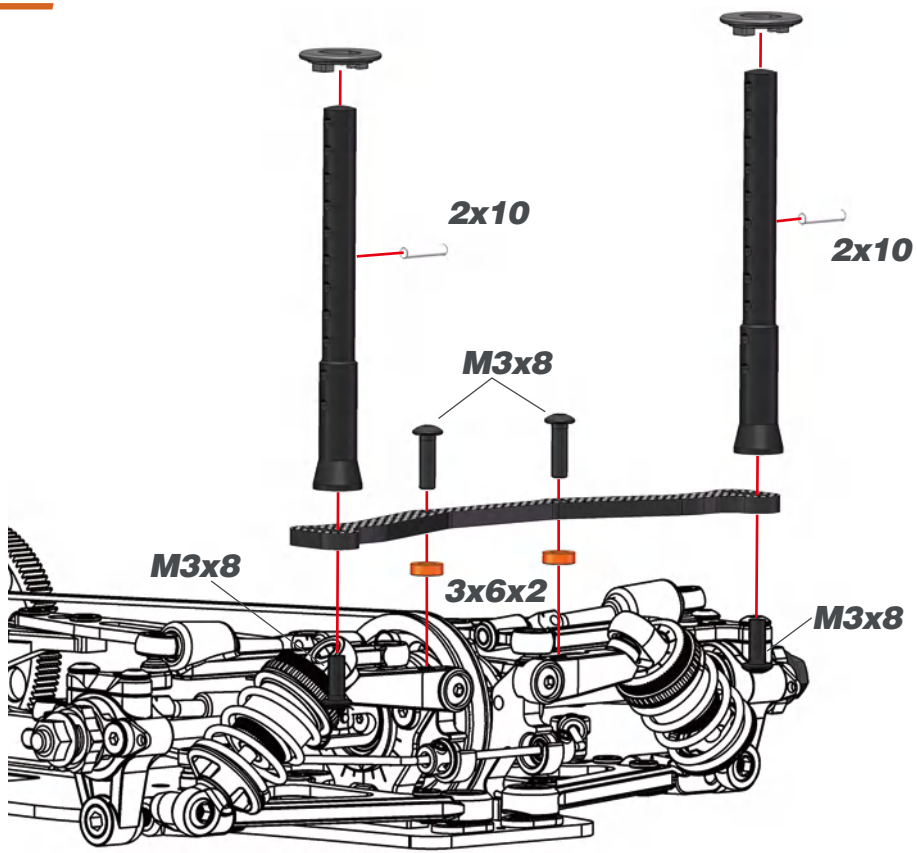

28.2

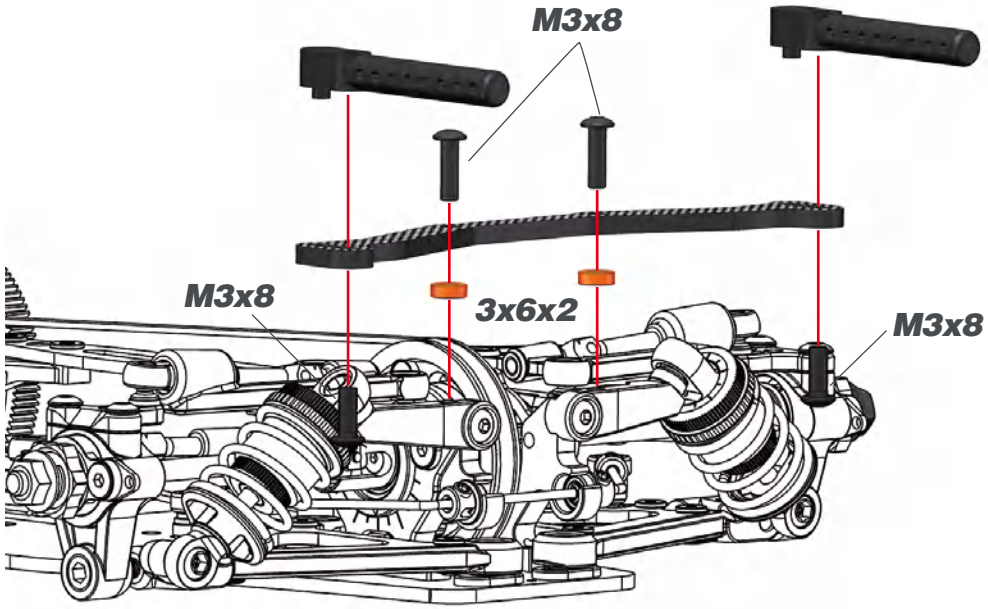

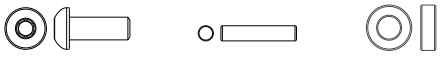



STEP 29

29.1

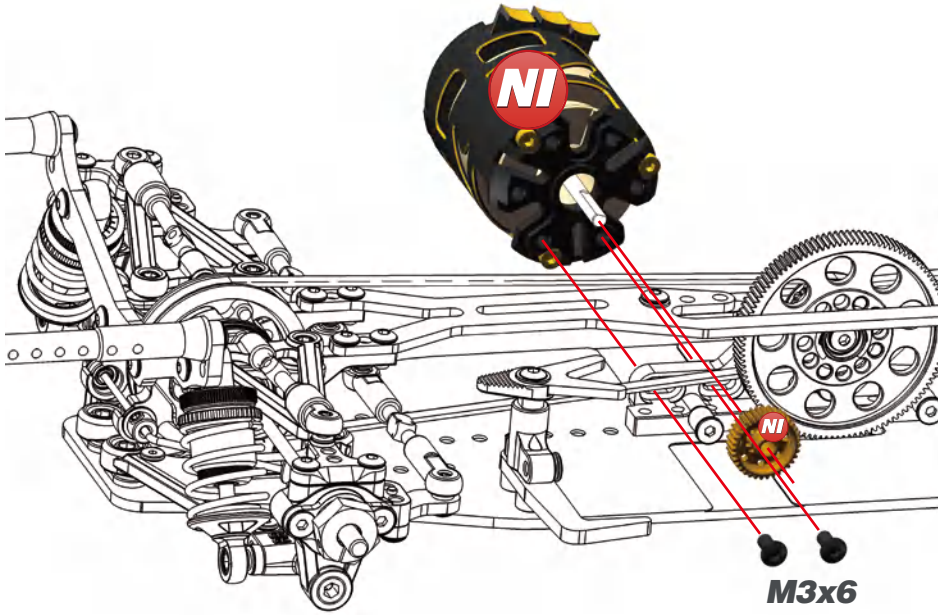

29.2

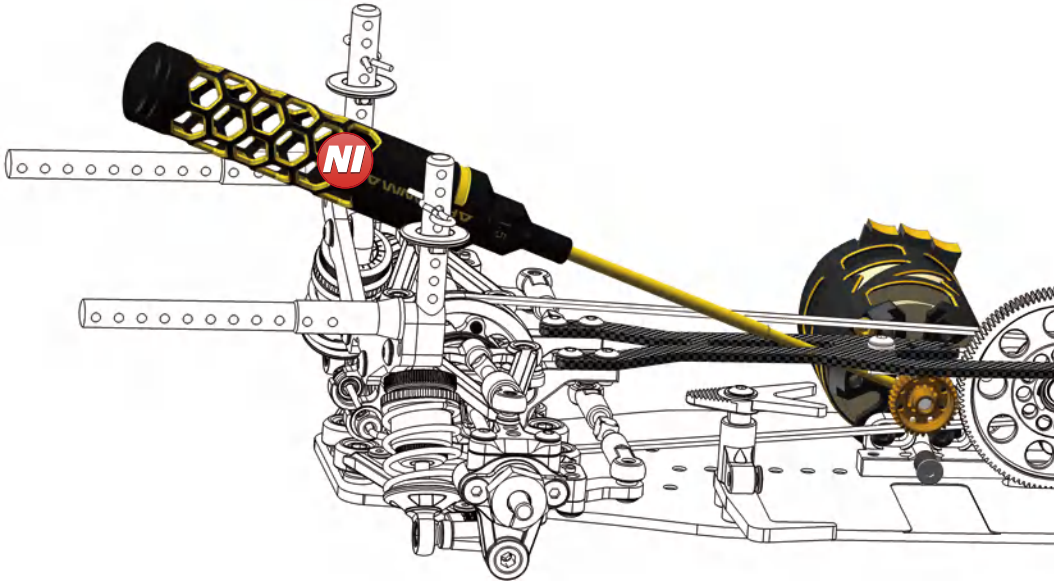

Lock the pinion screw from that way.


M3x6

STEP 30

30.1

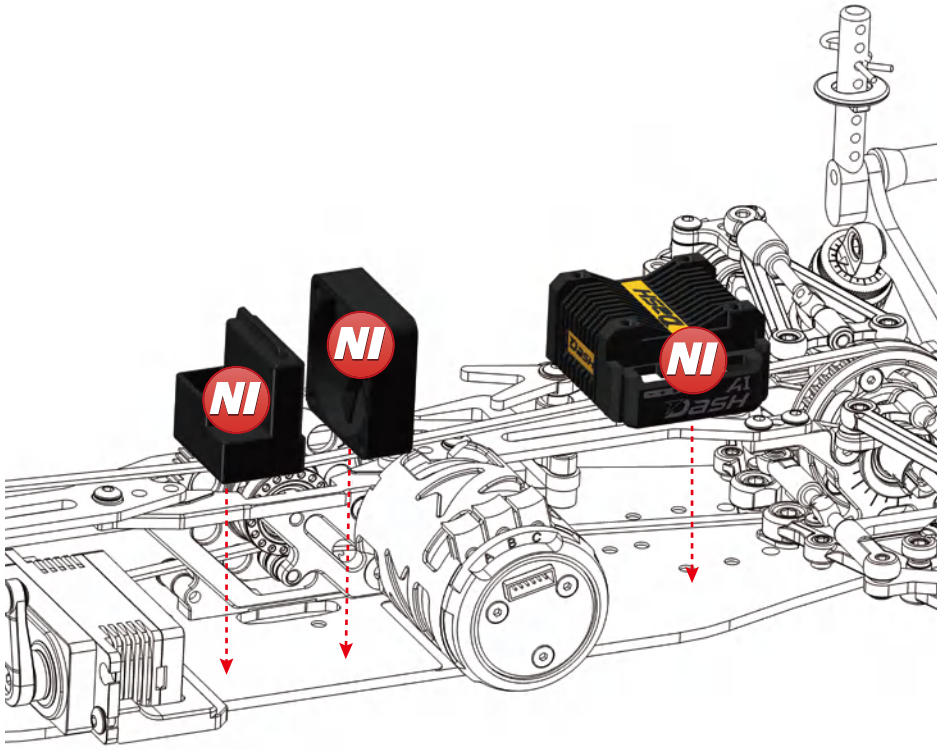

30.2

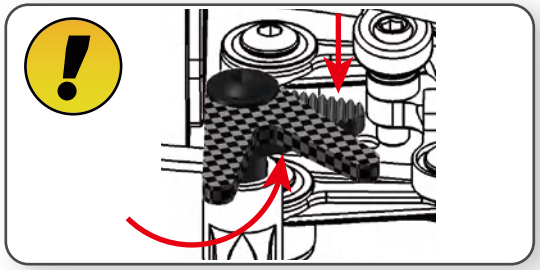

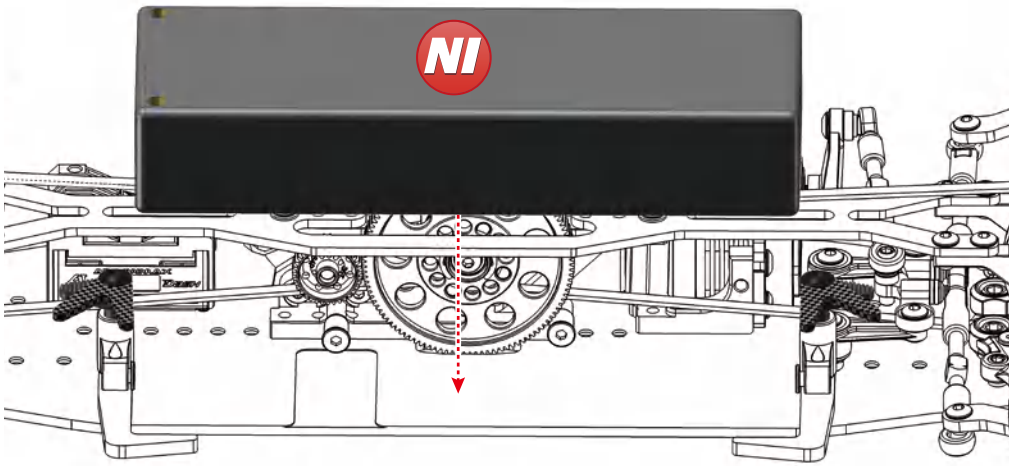

STEP 31

31.1

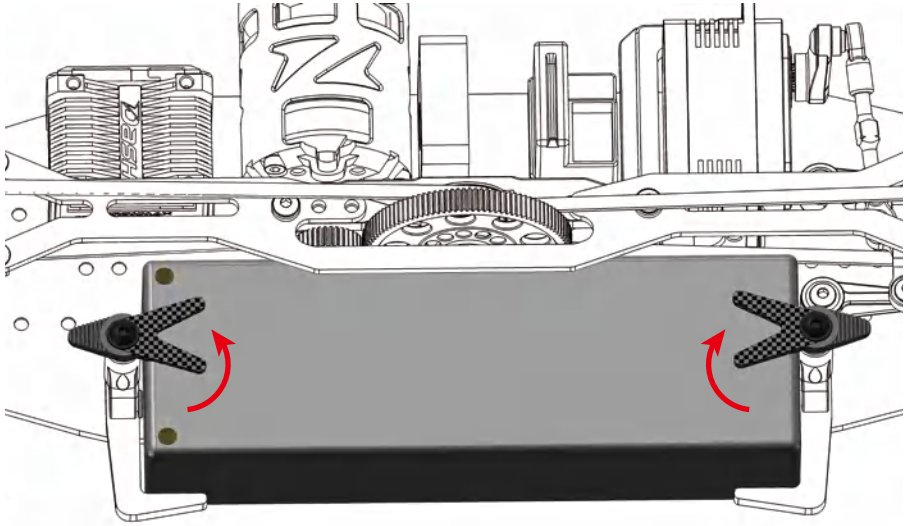

31.2

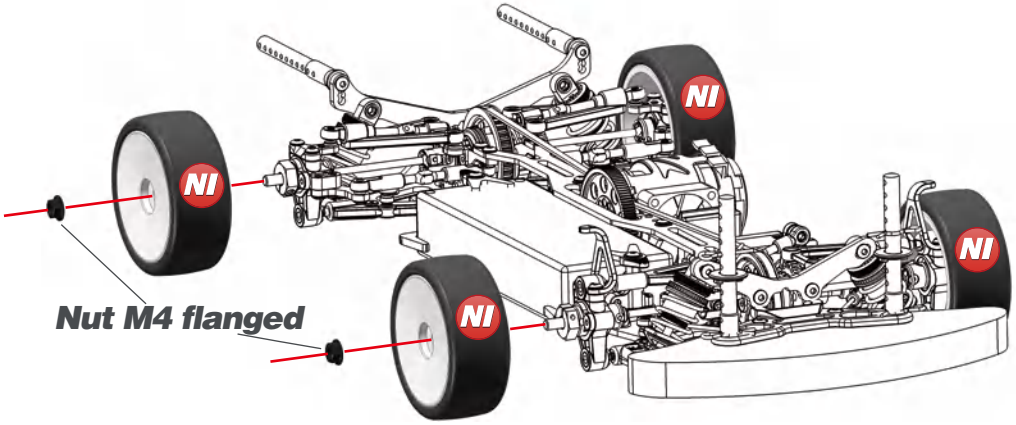



Nut M4
Flanged

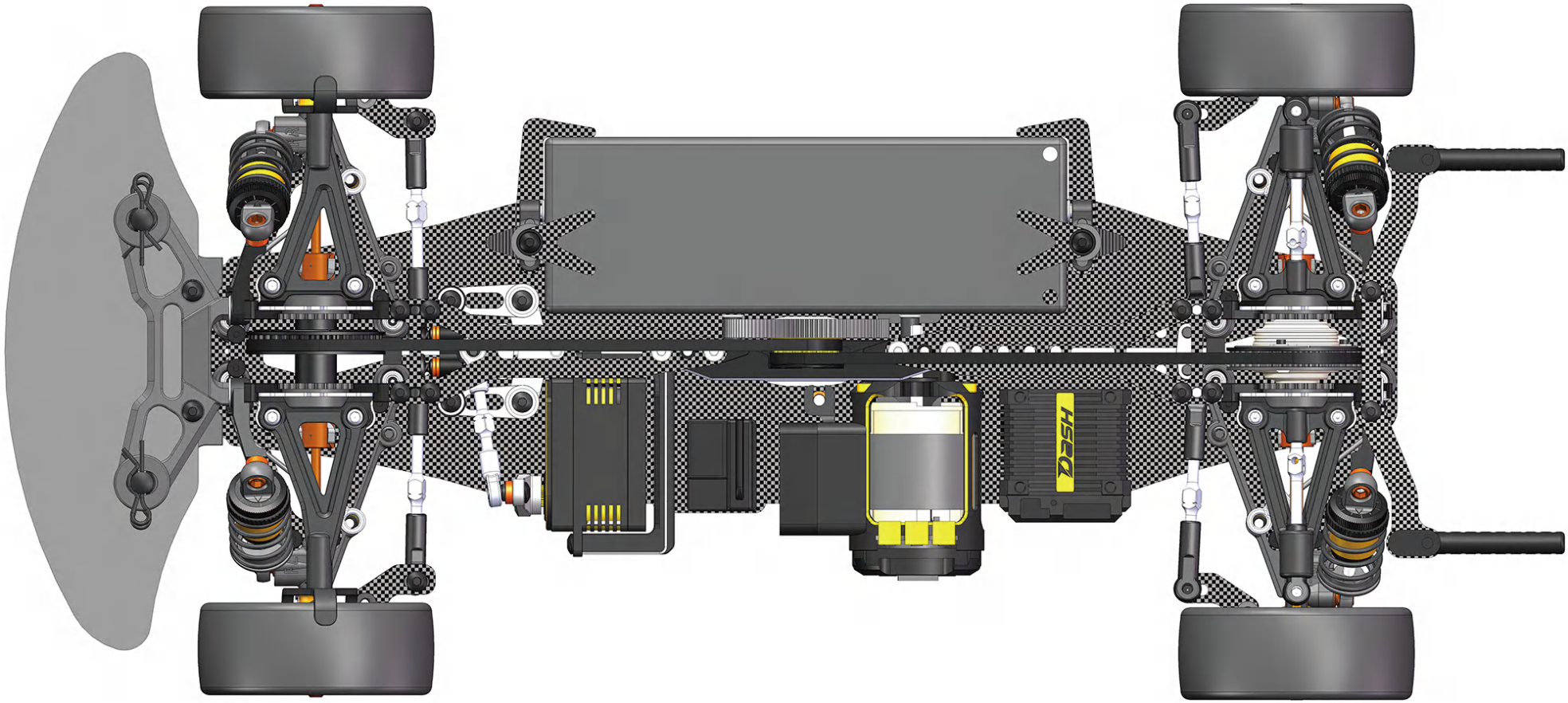

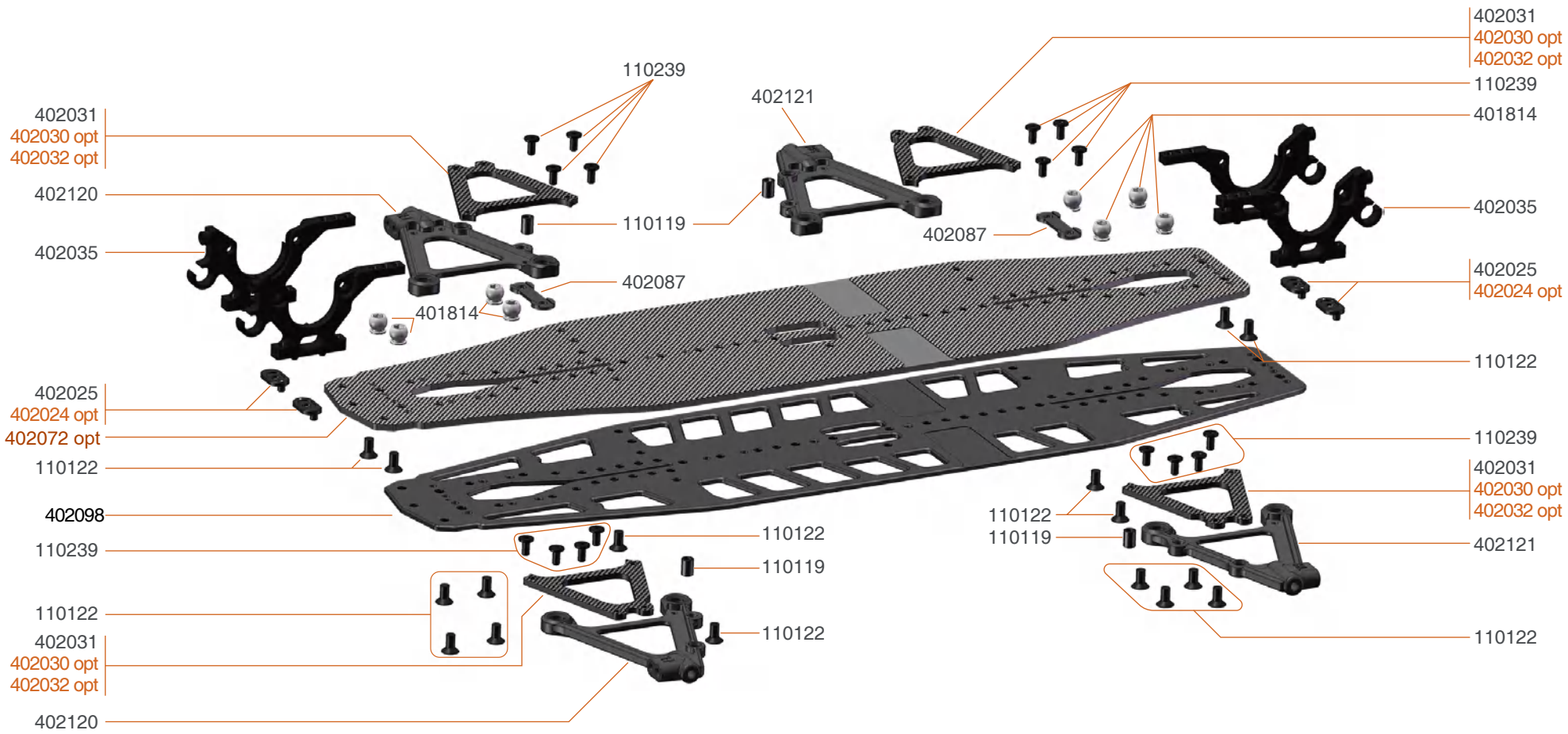

OPT

402024 Suspension insert lw 0.5deg (4) X20 '23
402030 Wishbone stiffner carbon S (4) X20 '23
402032 Wishbone stiffner carbon H (4) X20 '23
402072 Chassis carbon X20 '24

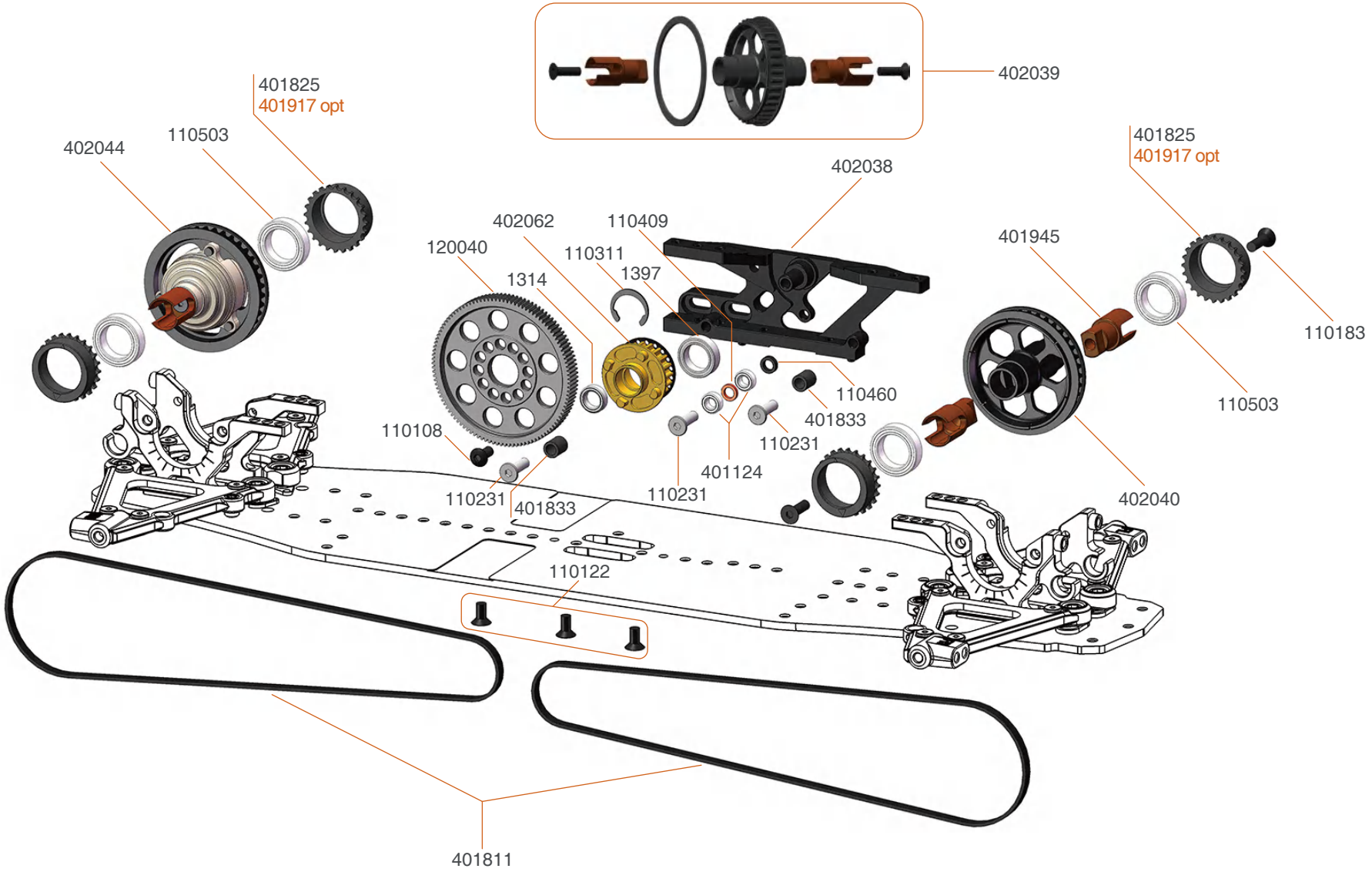

OPT

401917	Bearing excenter fr/rr (4) alu X20	120007	Spur gear 64P / 100T	120010	Spur gear 64P / 112T
402066	Motormount weight 5gr X20 '23	120008	Spur gear 64P / 104T	120012	Spur gear 64P / 114T
402067	Motormount weight 10gr X20 '23	120009	Spur gear 64P / 108T	120013	Spur gear 64P / 106T

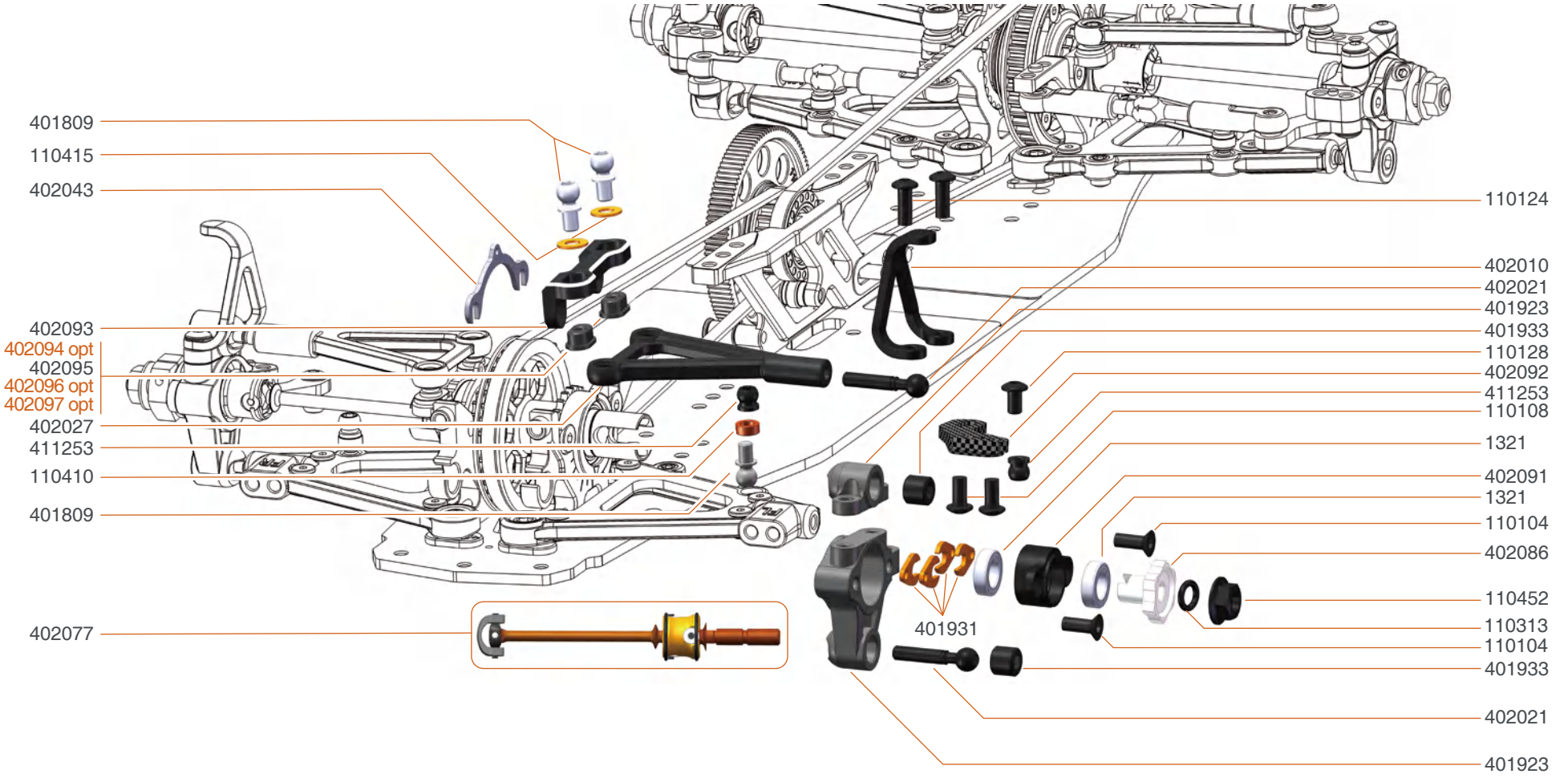

OPT

402094 Caster insert 0 (4) X20 '24
402096 Caster insert 2 (4) X20 '24
402097 Caster insert 3 (4) X20 '24

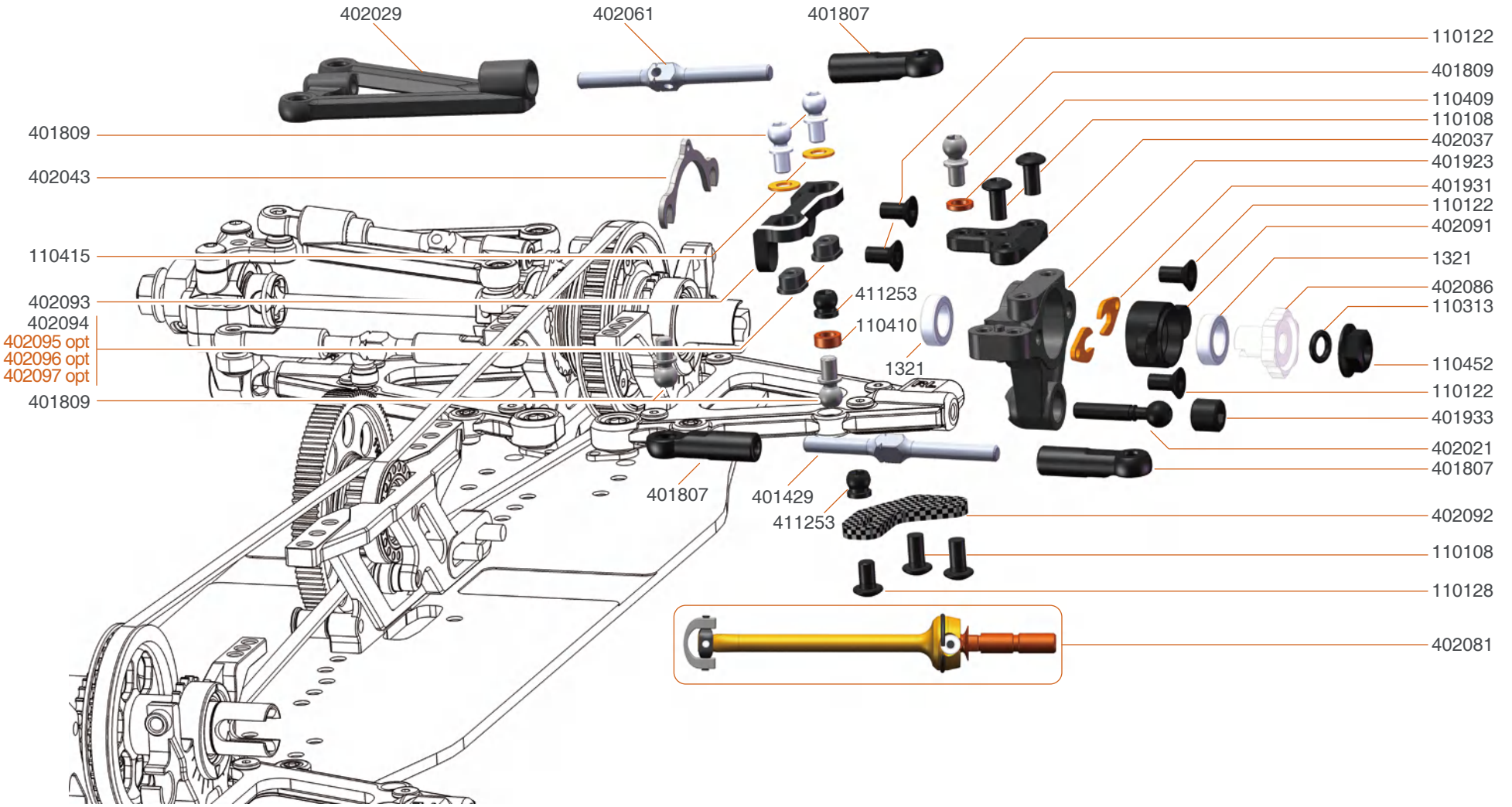

OPT

402095 Caster insert 1 (4) X20 '24
402096 Caster insert 2 (4) X20 '24
402097 Caster insert 3 (4) X20 '24

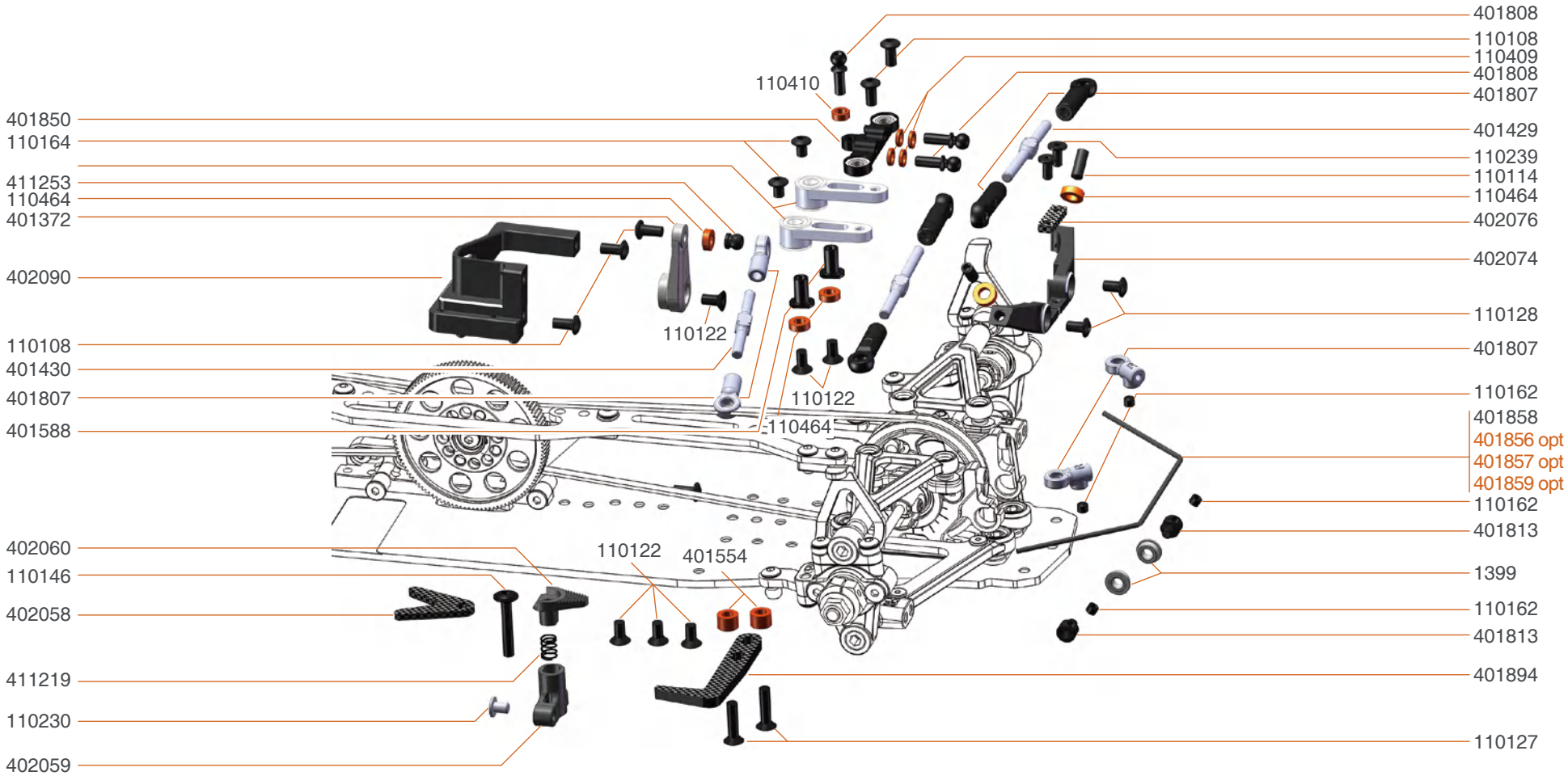

401856 Antirollbar 1,2mm X20
401857 Antirollbar 1,3mm X20
401859 Antirollbar 1,5mm X20

OPT

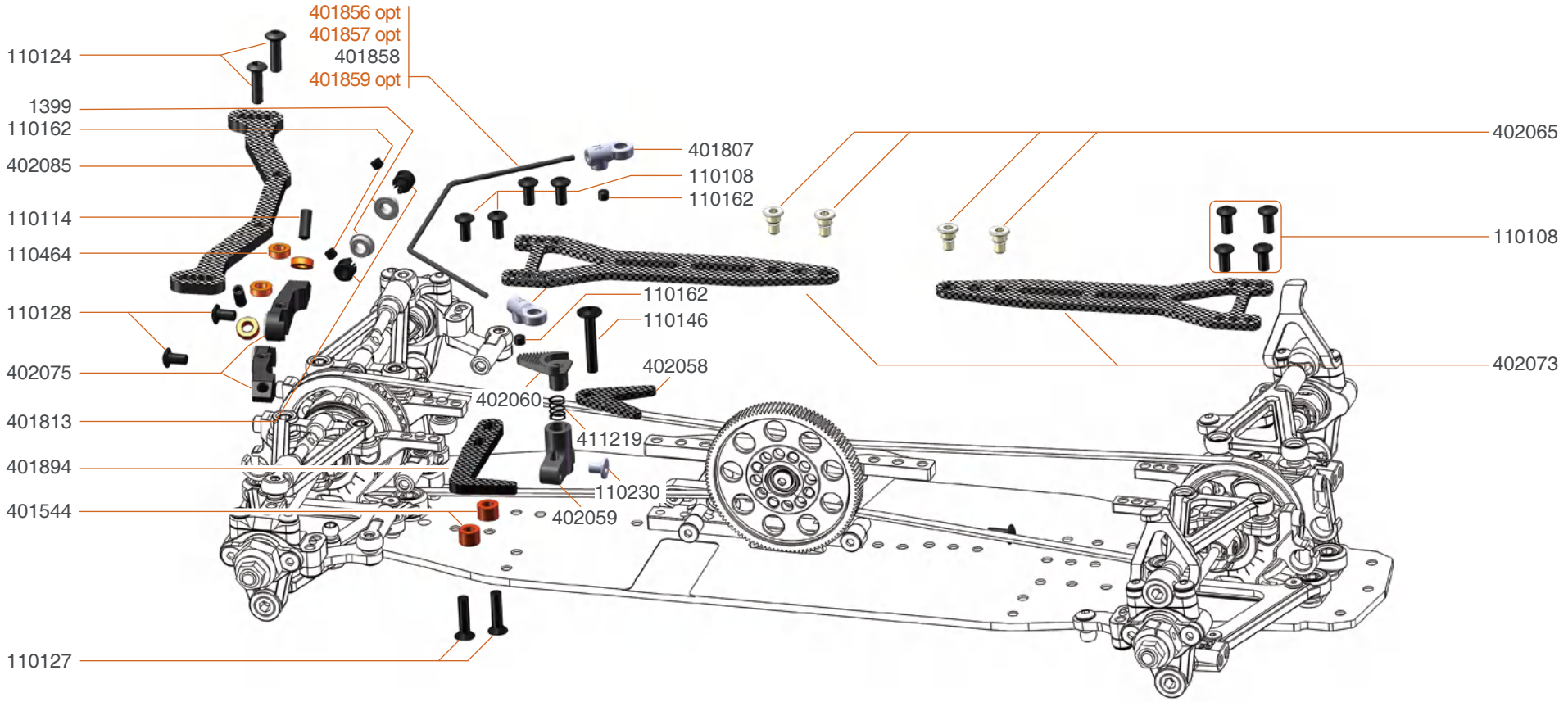

OPT

401856 Antirollbar 1,2mm X20
401857 Antirollbar 1,3mm X20
401859 Antirollbar 1,5mm X20

402063 Topdeck carbon soft set X20 '23
402064 Topdeck carbon hard set X20 '23

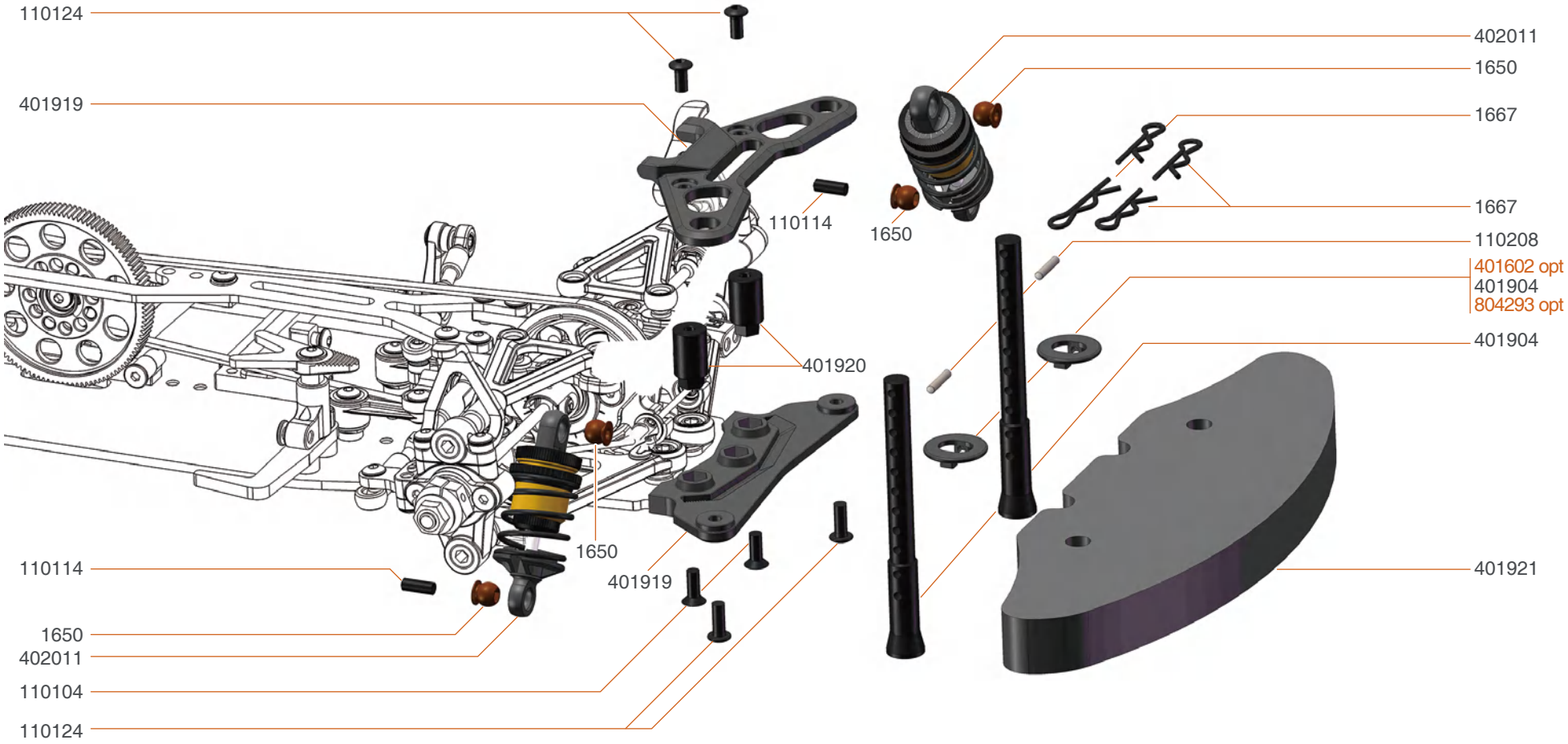

401997 Bumperset carbon X20 '21
401602 Body-height fine-tuner alu (4)
804293 Body support washers med + high (5+5)

OPT

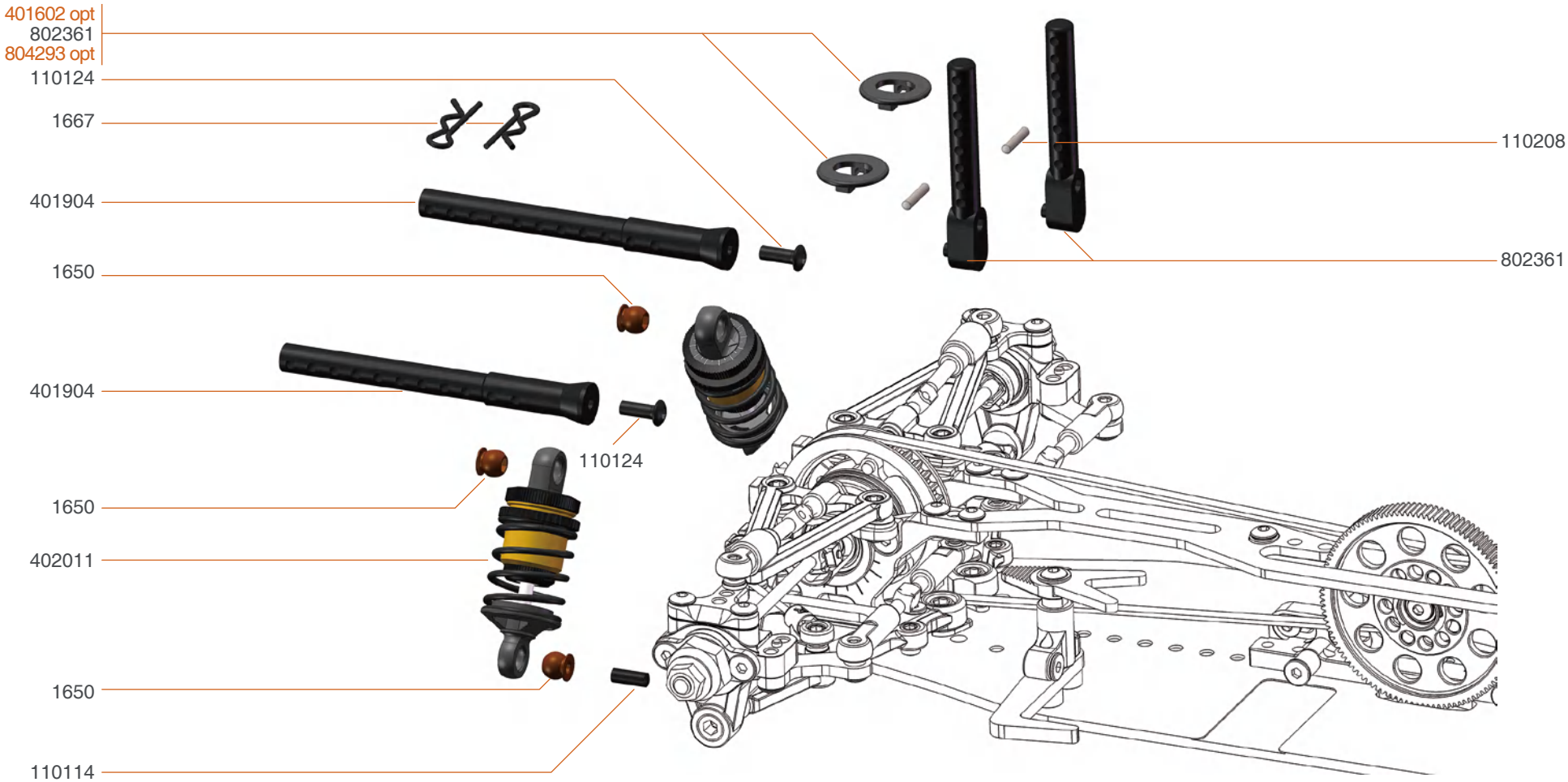

OPT

401602 Body-height fine-tuner alu (4)
804293 Body support washers med + high (5+5)

402077 DJC BB driveshaft set (2) X20 '24
402081 CVD BB driveshaft set (2) X20 '24

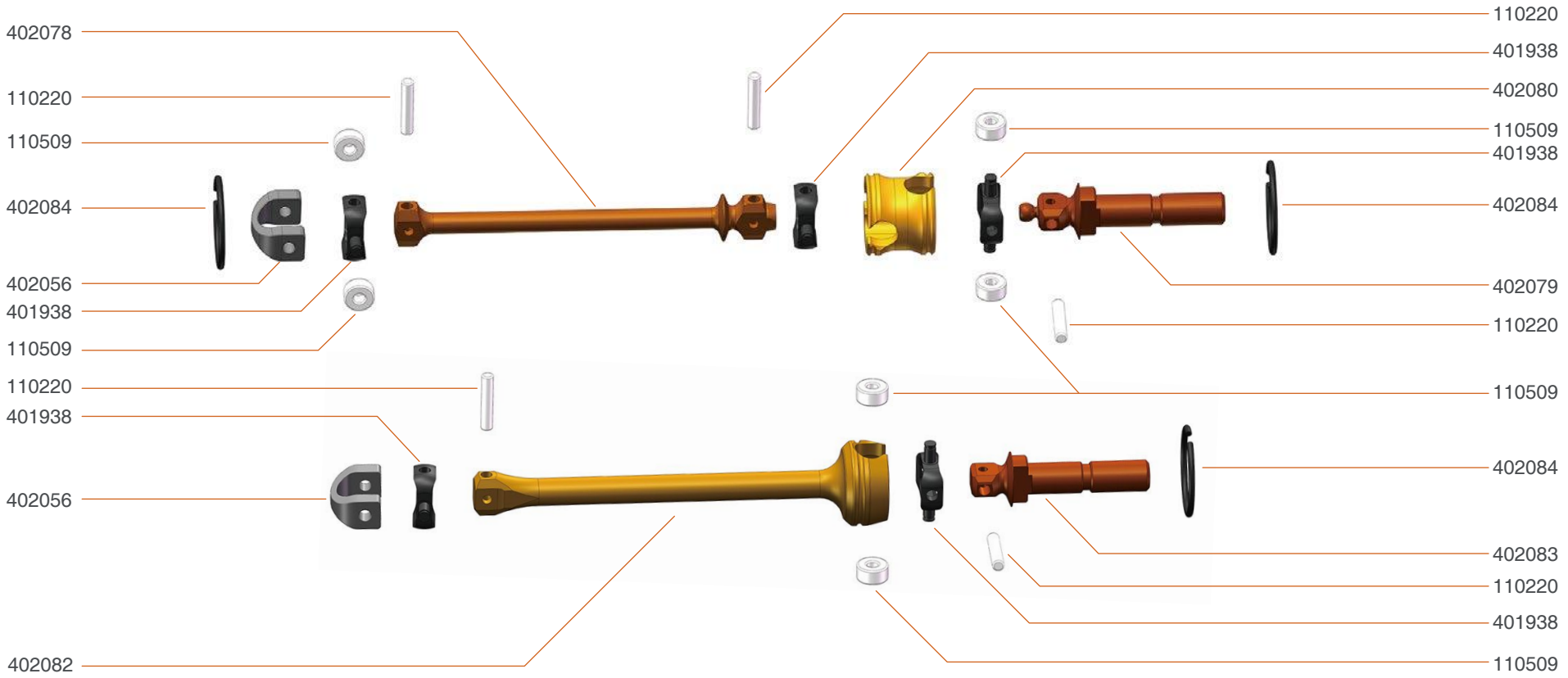

OPT

402011 Shockset (2) X20 '23

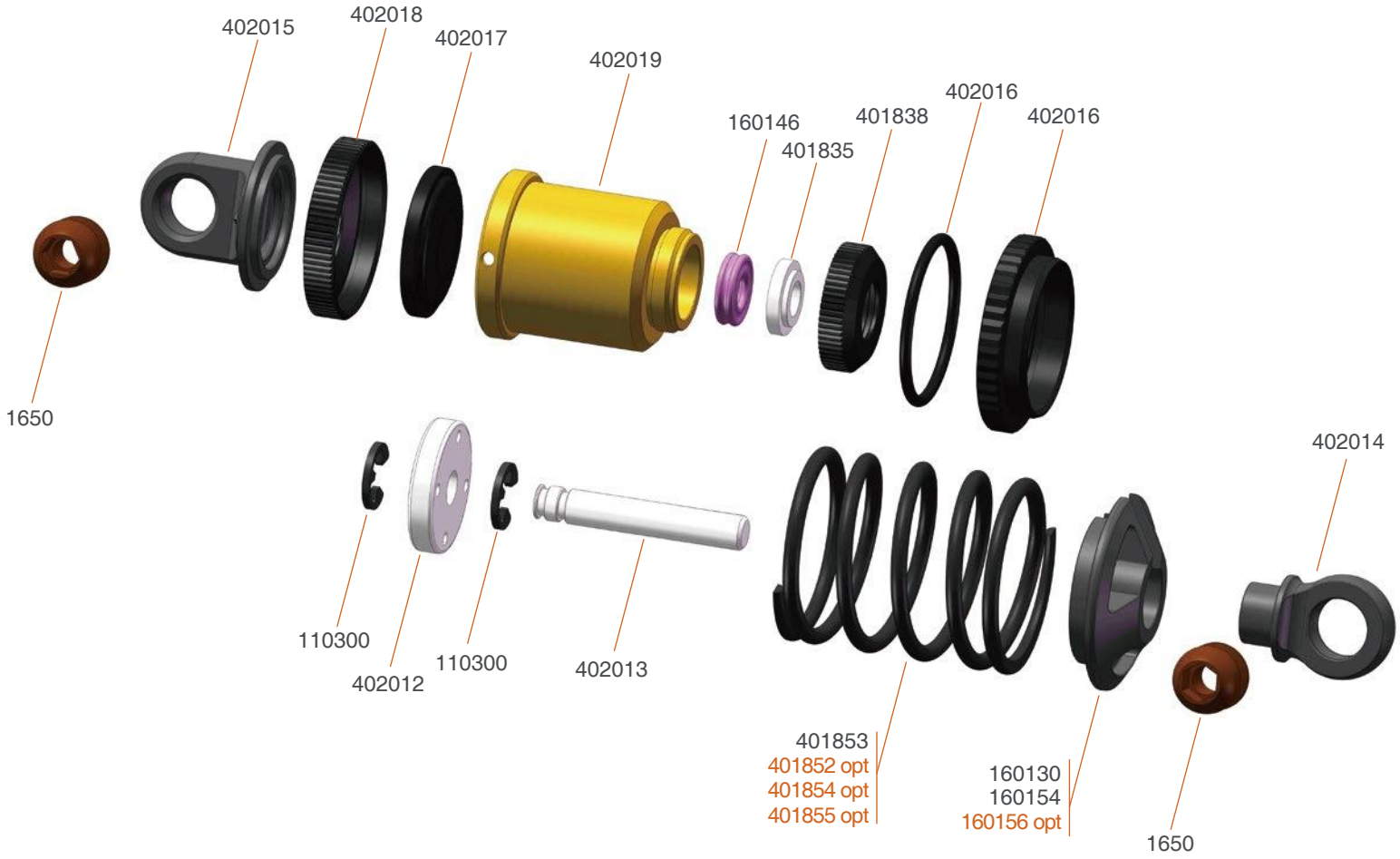

OPT

401852 Spring fr/rr 2,5 (2)
401854 Spring fr/rr 2,7 (2)
401855 Spring fr/rr 2,8 (2)
160156 Shock spring support low onroad alu (4)

402044 Geardiff set alu X20 '23



401784 Seal 5x9x2 diff (2)

OPT

TEAM SERPENT NETWORK

X20' 24 SPARE PARTS

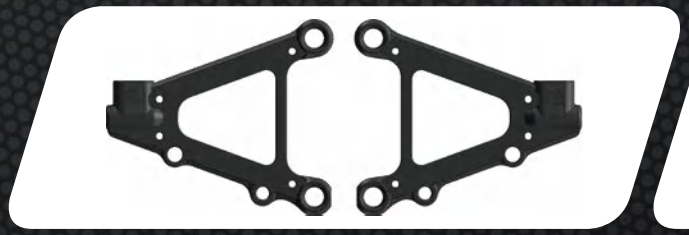

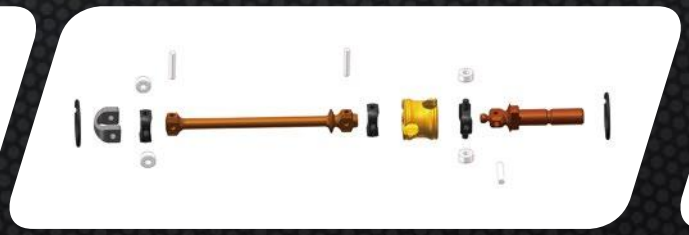



X20' 24 OPTIONALS PARTS







SERPENT TOOLS







SERPENT MERCHANDISING



SERPENT WEBSITE AND BLOG

www.serpent.com
www.teamserpent.com
www.dragon-rc.com

SERPENT PROMO PAGES http://promo.serpent.com

SERPENT SOCIAL MEDIA



www.facebook.com/SerpentMRC



www.youtube.com/user/SerpentMRC

INSTRUCTION MANUAL



SERPENT

Manual Medius X20 '24 ALUMINIUM #98744-2