Setup Sheet

Name:_____. Date:_____. Event:_____.

Track:_____. Track Condition:_____. Lap Time:_____. Final Position:_____.

Front

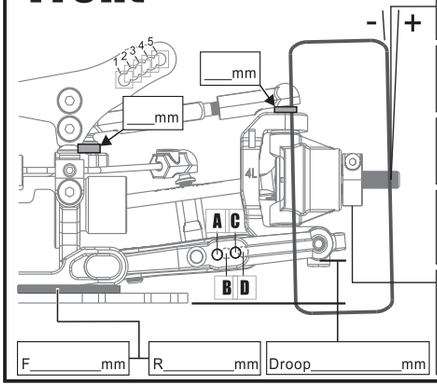

Camber Angle +/-____°

Caster Angle _____°

Ride Height _____mm

Sway Bar Ø_____mm

Wheel Hubs _____mm

Spacer _____mm

Front Diff ☐ Gear ☐ Spool

Diff Oil # _____.

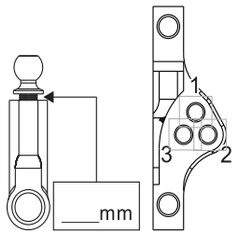

Shocks

Shock Oil #_____.

Piston 1.1 1.2 _____

O-ring _____.

Rebound _____.

Spring _____.

Length _____mm

Rear

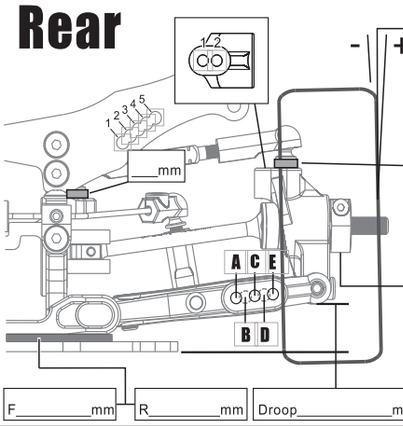

Camber Angle +/-____°

Ride Height _____mm

Shim _____mm

Sway Bar Ø_____mm

Wheel Hubs _____mm

Spacer _____mm

Rear Diff Oil # _____.

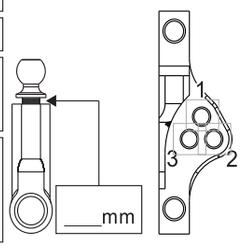

Shocks

Shock Oil #_____.

Piston 1.1 1.2 _____

O-ring _____.

Rebound _____.

Spring _____.

Length _____mm

A.R.T.SYSTEM

Active Rear Toe System

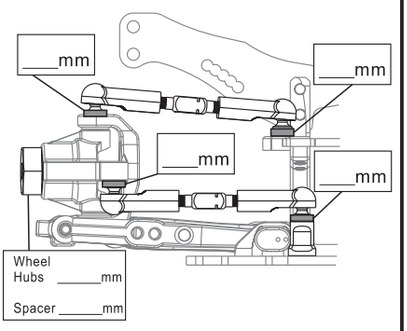

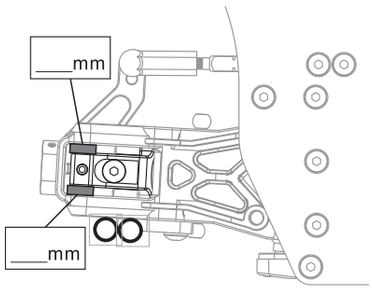

Chassis

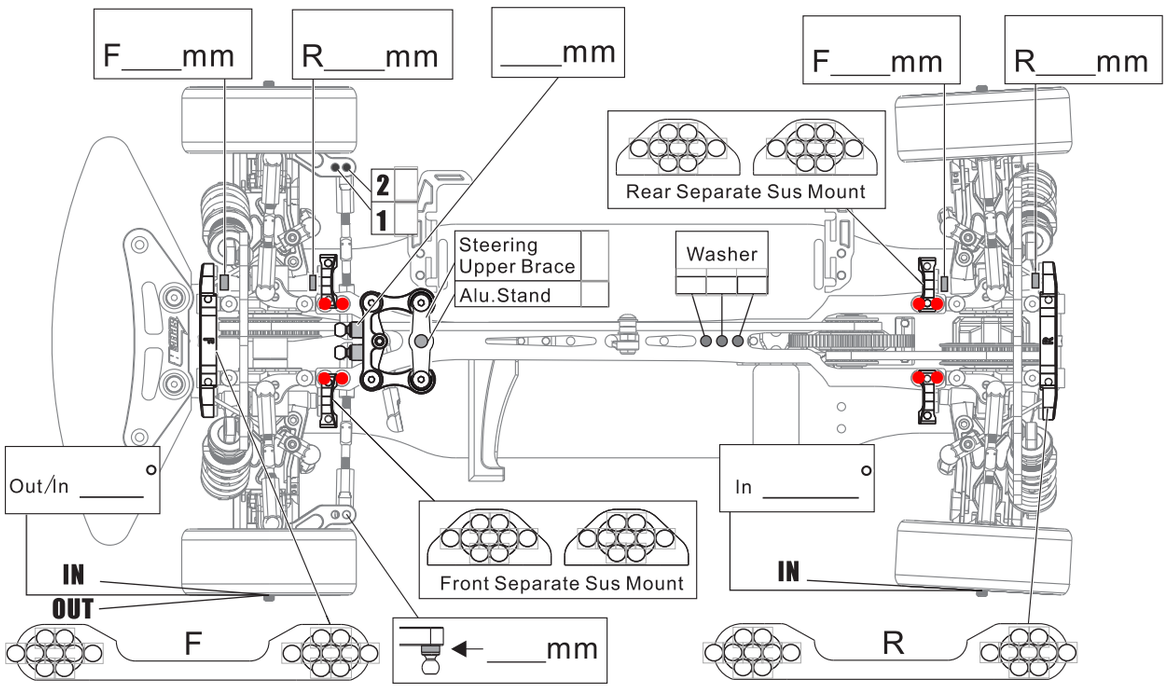

Tires

Brand:_____.

Compound:_____.

Insert:_____.

Wheel:_____.

Others

Motor:_____.

Spur Gear:_____.

Pinion Gear:_____.

Battery:_____.

ESC:_____.

Body:_____.

Wing:_____.

www.petitrc.com

	Front			Rear		
	Soft	Hard	Alu.	Soft	Hard	Alu.
C-Hub						
Steering Block						
Rear-Hub						
Arm						

Note: