S2 Setup Sheet

Name:_____ Date:_____ Event:_____

Track:_____ Track Condition:_____ Lap Time:_____ Final Position:_____

Front

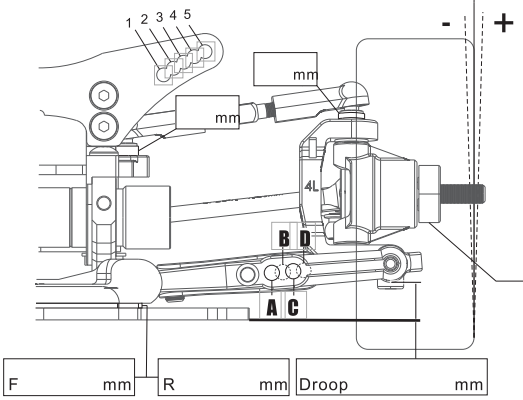

Camber Angle +/-	°
Caster Angle	°
Ride Height	mm
Sway Bar Ø	mm
Wheel Hubs	mm
Spacer	mm

Front Diff ☐ Gear ☐ Spool

Diff Oil #

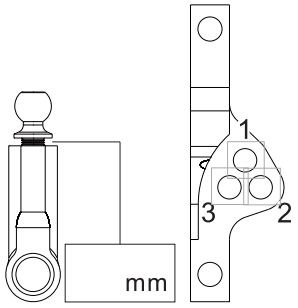

Shocks

Shock Oil #

Piston

O-ring

Rebound

Spring

Length mm

Rear

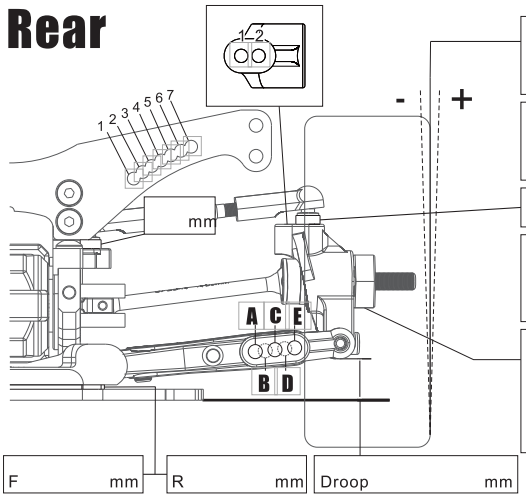

Camber Angle +/-	°
Ride Height	mm
Shim	mm
Sway Bar Ø	mm
Wheel Hubs	mm
Spacer	mm

Rear Diff Oil #

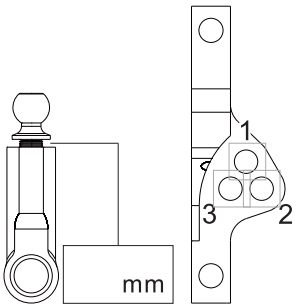

Shocks

Shock Oil #

Piston

O-ring

Rebound

Spring

Length mm

Chassis

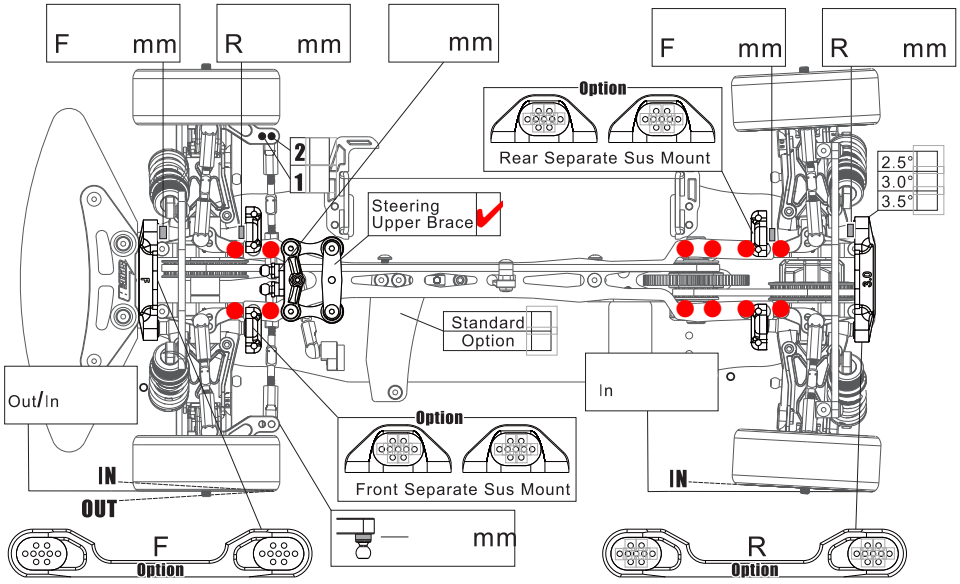

Tires

Brand:

Compound:

Insert:

Wheel:

Others

Motor:

Spur Gear:

Pinion Gear:

Battery:

ESC:

Body:

Wing:

Note:

Editable by Arn0 at PetitRC.com

ARNO