COMPETITION GRADE HIGH PERFORMANCE RADIO CONTROL RACING CAR CHASSIS KIT

FIREBOLT DM2

1/10 RWD ELECTRIC COMPETITION OFFROAD BUGGY CAR KIT

vbc racing

SETUP SHEET

DRIVER _____ DATE _____

TRACK _____ RESULT _____

COMPOSITION _____ INDOOR OUTDOOR

SURFACE BUMPY SMOOTH TEMP. _____

GRIP CONDITION HI MED LOW HUMIDITY DRY WET

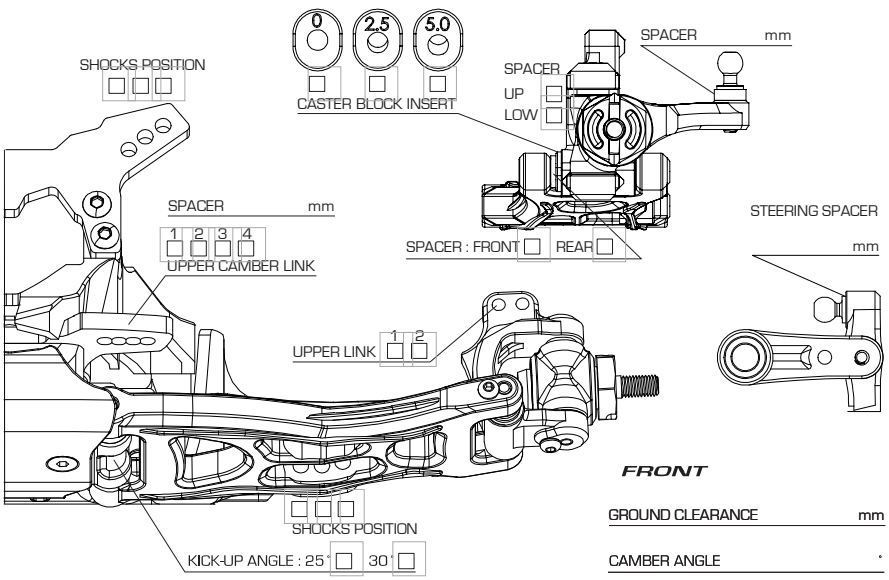

ADDITIONAL WEIGHT g WEIGHT LOCATION _____

FRONT

GROUND CLEARANCE mm

CAMBER ANGLE °

TOE ANGLE °

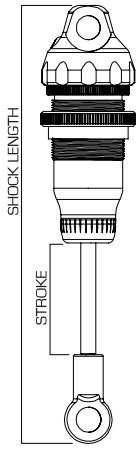

FRONT

SHOCK LENGTH mm

STROKE mm

PISTON

OIL

SPRING

LIMITERS: Inside mm Outside mm

REBOUND %

NOTES

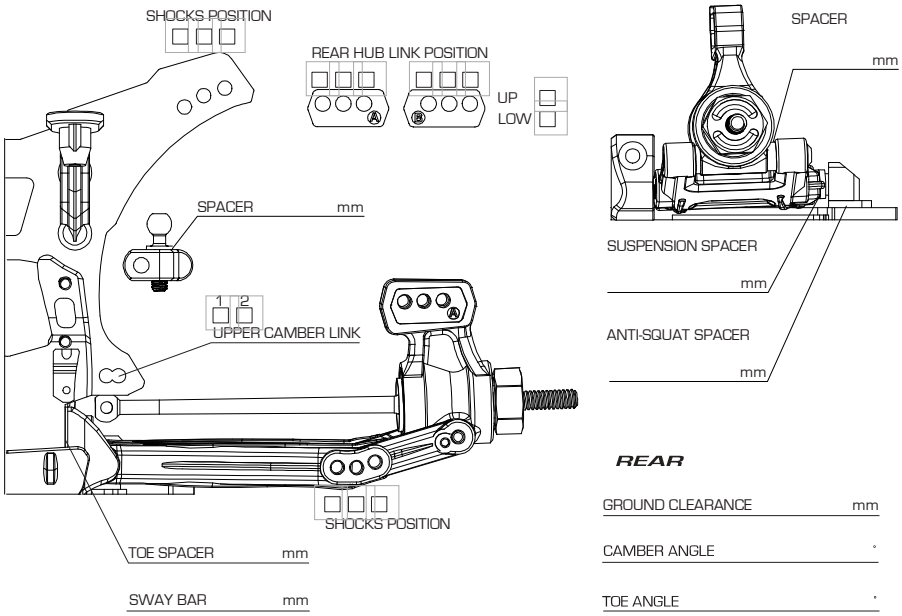

REAR

GROUND CLEARANCE mm

CAMBER ANGLE °

TOE ANGLE °

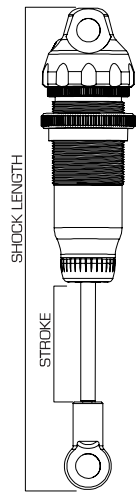

REAR

SHOCK LENGTH mm

STROKE mm

PISTON

OIL

SPRING

LIMITERS: Inside mm Outside mm

REBOUND %

NOTES

DIFFERENTIAL

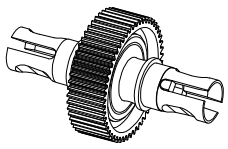

DIFFERENTIAL TYPE :
BALL GEAR

SETTING : _____

OIL : _____

BATTERY POSITION

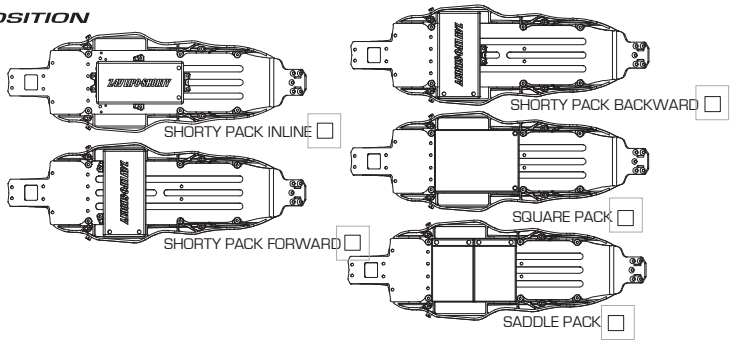

FRONT TIRES

TIRE : _____

COMPOUND : _____

INSERT : _____

WHEEL : _____

NOTES : _____

REAR TIRES

TIRE : _____

COMPOUND : _____

INSERT : _____

WHEEL : _____

NOTES : _____

MOTOR : _____ ROTOR : _____ TIMING : _____

SPUR : _____ T PINION : _____ T RATIO : _____

ESC : _____ SETUP : _____ BATTERY : _____

STEERING EXPO : _____ BRAKE E.P. : _____ THROTTLE EXPO : _____

BODY : _____ WING : _____ ANGLE : 6° 8° 10°