1/10 LUXURY NITRO TOURING CAR

XRAY NT1



SUPPLEMENTARY SHEET
XRAY NT1'27

XRAY NT1'27
INSTRUCTION MANUAL SUPPLEMENTARY SHEET

Use this NT1 Supplementary Instruction Sheet along with the standard NT1 Instruction Manual.

EQUIPMENT INCLUDED

450cSt (#106346)
HUDY Premium Silicone Oils



OIL

60.000cSt (#106560)
HUDY Premium Silicone Oils



OIL

500.000cSt (#106650)
HUDY Premium Silicone Oils



OIL

(HUDY #106210)
Premium Graphite Grease



GR
GRAPHITE GREASE



HUDY PREMIUM SILICONE OILS		
FOR SHOCK ABSORBERS		
#106321	200cSt - 100ml	OPTION
#106326	250cSt - 100ml	OPTION
#106331	300cSt - 100ml	OPTION
#106336	350cSt - 100ml	OPTION
#106338	375cSt - 100ml	OPTION
#106341	400cSt - 100ml	OPTION
#106343	425cSt - 100ml	OPTION
#106346	450cSt - 100ml	INCLUDED
#106348	475cSt - 100ml	OPTION
#106351	500cSt - 100ml	OPTION
#106353	525cSt - 100ml	OPTION
#106356	550cSt - 100ml	OPTION
#106358	575cSt - 100ml	OPTION
#106361	600cSt - 100ml	OPTION

SILICONE OILS for GEAR DIFF		
#106510	10.000cSt - 50ml	OPTION
#106492	11.000cSt - 50ml	OPTION
#106512	12.000cSt - 50ml	OPTION
#106513	13.000cSt - 50ml	OPTION
#106515	15.000cSt - 50ml	OPTION
#106517	17.000cSt - 50ml	OPTION
#106520	20.000cSt - 50ml	OPTION
#106530	30.000cSt - 50ml	OPTION
#106540	40.000cSt - 50ml	OPTION
#106550	50.000cSt - 50ml	OPTION
#106560	60.000cSt - 50ml	INCLUDED
#106580	80.000cSt - 50ml	OPTION
#106610	100.000cSt - 50ml	OPTION
#106615	150.000cSt - 50ml	OPTION
#106620	200.000cSt - 50ml	OPTION
#106630	300.000cSt - 50ml	OPTION
#106650	500.000cSt - 50ml	INCLUDED
#106692	1000.000cSt - 50ml	OPTION



TIP

All ball-bearings are factory pre-oiled or pre-greased. The bearings are all packaged in BAG 00.9.

For pre-oiled ball-bearings, use:
#106230 HUDY Bearing Oil.

For pre-greased ball-bearings, use one of these bearing greases:
#106220 - HUDY Bearing Grease - suggested for extremely dusty track conditions.
#106221 - HUDY Bearing Grease "Blue" - suggested for medium dusty track conditions.
#106222 - HUDY Bearing Grease "Red" - suggested for low dusty track conditions.

Replace any bearings that develop a "gritty" feeling to prevent inefficiency and avoid failures.

Make sure to use only original XRAY ball-bearings, which all have specific tolerances, axial and radial play, and are all individually selected. Using 3rd party ball-bearings may result in bearing failures and damage to other parts.

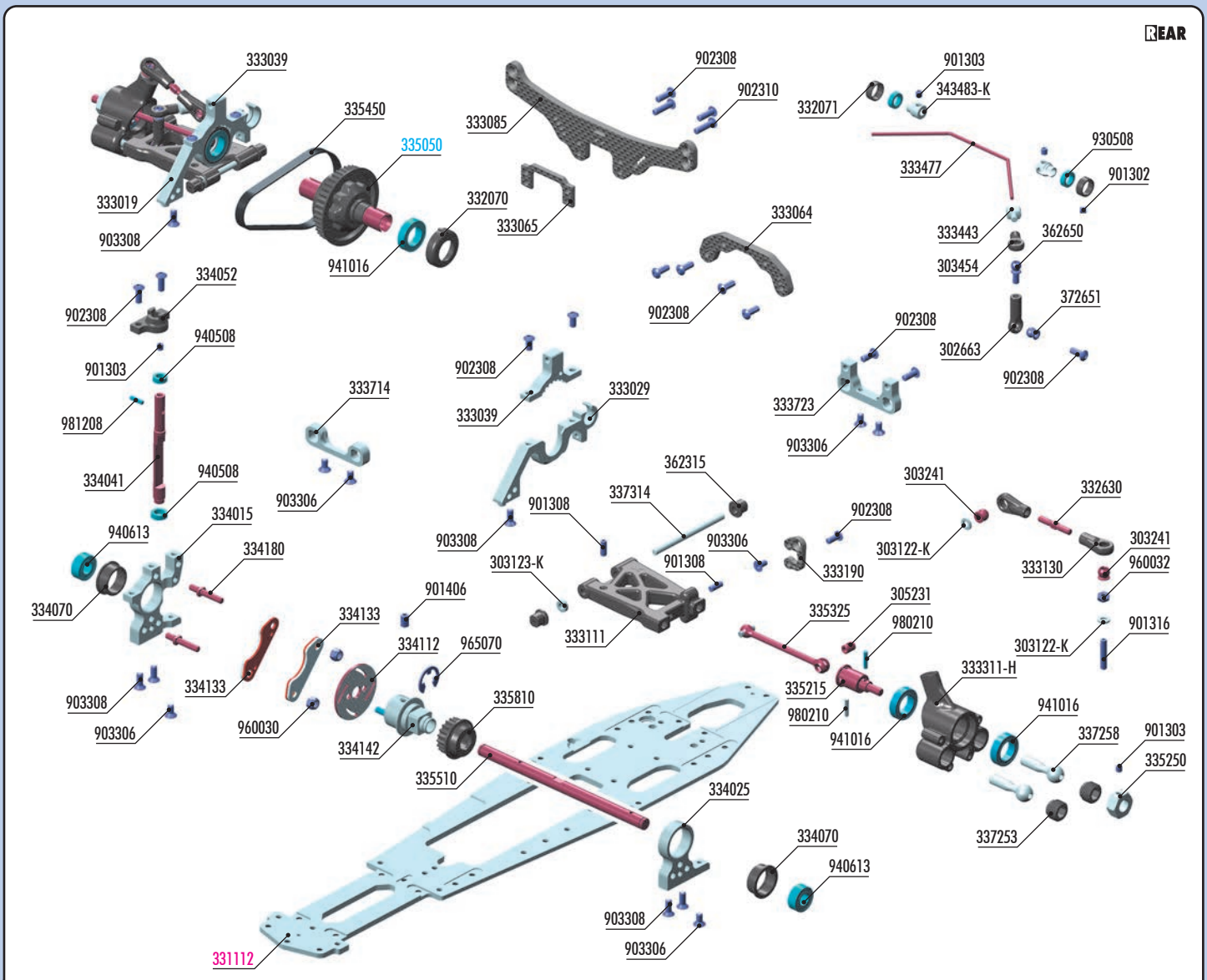

BAG 02

302663	COMPOSITE BALL JOINT 4.9mm - OPEN - V2 (8)
303122-K	ALU SHIM 3x6x1.0mm - BLACK (10)
303123-K	ALU SHIM 3x6x2.0mm - BLACK (10)
303241	BALL UNIVERSAL 5.8mm HEX (4)
303454	BALL JOINT 4.9mm - OPEN (4)
305231	DRIVE SHAFT COUPLING - HUDY SPRING STEEL™
332070	COMPOSITE ADJUST. BALL-BEARING HUB (4)
332071	COMPOSITE BALL-BEARING HUB (4)
332630	ADJ. TURNBUCKLE L/R 25mm - HUDY SPRING STEEL™ (2)
333019	ALU LOWER BULKHEAD REAR RIGHT - BLACK - SWISS 7075 T6
333029	ALU LOWER BULKHEAD REAR LEFT - BLACK - SWISS 7075 T6
333039	ALU UPPER CLAMP REAR (L+R) - BLACK - SWISS 7075 T6
333064	CARBON ROLL-CENTER BRIDGE
333065	CARBON ROLL-CENTER BRIDGE
333085	CARBON SHOCK TOWER REAR
333111	COMPOSITE SUSPENSION ARM REAR LOWER - HARD
333130	COMPOSITE REAR UPPER CAMBER LINK BALL JOINT 5.8mm (4)
333190	NT1'26 CARBON REAR SHOCK ABSORBER ADAPTER (L+R)
333311-H	COMPOSITE UPRIGHT REAR FOR AERO DISC - HARD
333443	ALU ANTI-ROLL BAR COLLAR o2.2 (2)
333477	ANTI-ROLL BAR FOR BALL-BEARINGS - REAR 1.6mm
333714	ALU REAR LOWER 1-PIECE SUSPENSION HOLDER - FRONT - BLACK - RF
333723	ALU REAR LOWER 1-PIECE SUSPENSION HOLDER - REAR - BLACK - RR
334015	ALU BRAKE STAND - BLACK - SWISS 7075 T6
334025	ALU 2-SPEED HOLDER - BLACK - SWISS 7075 T6 - SET
334041	BRAKE CAM POST - STEEL
334052	COMPOSITE BRAKE UPPER PLATE
334070	COMPOSITE 6x13x5 BALL-BEARING HUB (2)
334112	VENTILATED BRAKE DISK - LASER CUT - PRECISION-GROUND
334133	GLUED BRAKE PAD SET - RED (2)
334142	ALU LIGHTWEIGHT BRAKE DISK ADAPTER - BLACK - SWISS 7075 T6
334180	ADJUSTABLE BRAKE PAD GUIDE PIN - HUDY SPRING STEEL™ (2)
335215	CVD AXLE - SUPER LIGHT - HUDY SPRING STEEL™
335250	ALU WHEEL HUB 12mm - BLACK (2)
335305	CVD DRIVE SHAFT - REAR - SET - HUDY SPRING STEEL™ (1)
335325	CVD DRIVE SHAFT - REAR - HUDY SPRING STEEL™
335450	PUR®-REFINFORCED DRIVE BELT REAR 5.5 x 177mm
335510	2-SPEED SHAFT - V2
335810	COMPOSITE BELT PULLEY 20T - 2-SPEED-CENTER
337253	COMPOSITE ADJUSTING NUT M10x1 WITH BALL CUP (4)
337258	STEEL PIVOT BALL 8.4mm o3.3 L=25mm (2)
337314	REAR LOWER INNER PIVOT PIN (2)
343483-K	ALU CUTTED ANTI-ROLL BAR COLLAR o2.3 - BLACK (2)
362315	ECCENTRIC BUSHING SET (2)
362650	BALL END 4.9mm WITH THREAD 6mm (2)
372651	PIVOT BALL UNIVERSAL 4.9mm - HUDY SPRING STEEL (2)
901302	HEX SCREW SB M3x2.5 (10)
901303	HEX SCREW SB M3x3 (10)
901308	HEX SCREW SB M3x8 (10)
901316	HEX SCREW SB M3x16 (10)
901406	HEX SCREW SB M4x6 (10)
902308	HEX SCREW SH M3x8 (10)
902310	HEX SCREW SH M3x10 (10)
903306	HEX SCREW SFH M3x6 (10)
903308	HEX SCREW SFH M3x8 (10)
930508	BALL-BEARING 5x8x2.5 STEEL SEALED - OIL (2)
940508	BALL-BEARING 5x8x2.5 RUBBER SEALED - OIL (2)
940613	BALL-BEARING 6x13x5 RUBBER SEALED - OIL (2)
941016	BALL-BEARING 10x16x4 RUBBER SEALED - OIL (2)
960030	NUT M3 (10)
960032	NUT M3 (10)
965070	E-CLIP 7 (10)
981208	PIN 2x8 (10)
980210	PIN 2x10 (10)
335050	REAR GEAR DIFFERENTIAL - SET
331112	CHASSIS 3MM - CNC MACHINED - SWISS 7075 T6

Numbers in parentheses ( ) refer to quantities when purchased separately.

2. REAR SUSPENSION

Page 13 / Step 3

4x 901308 SB M3x8

2x 902308 SH M3x8

2x 903306 SFH M3x6

2x L=R

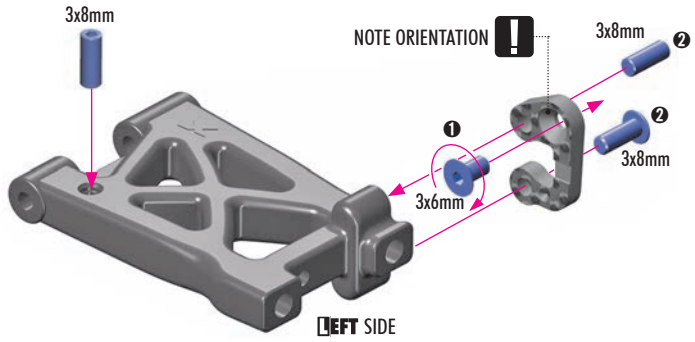

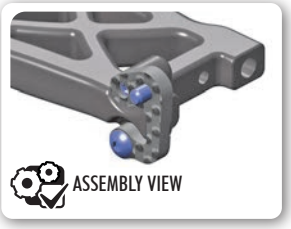

2. REAR SUSPENSION

Page 15 / Step 1

2x 902308 SH M3x8

2x 902310 SH M3x10

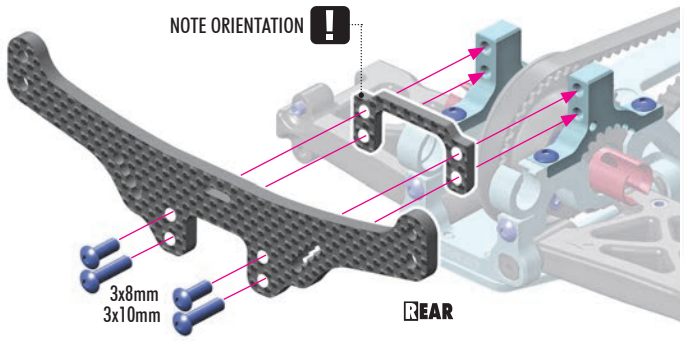

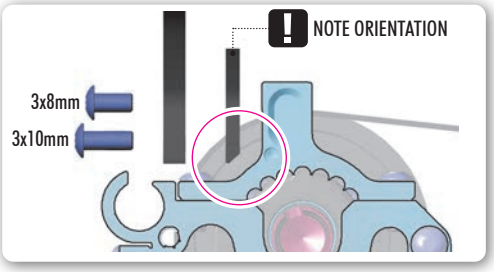

2. REAR SUSPENSION

Page 16 / Step 3

OPTION

REAR ANTI-ROLL BARS			COLLARS
#333477	1.6mm	INCLUDED	#333443 + 343483-K INCLUDED
#333478	1.8mm	OPTION	
#333480	2.0mm	OPTION	
#333482	2.2mm	OPTION	
#333484	2.4mm	OPTION	#333442 + 343484-K
#333486	2.6mm	OPTION	#333442 + 343482-K

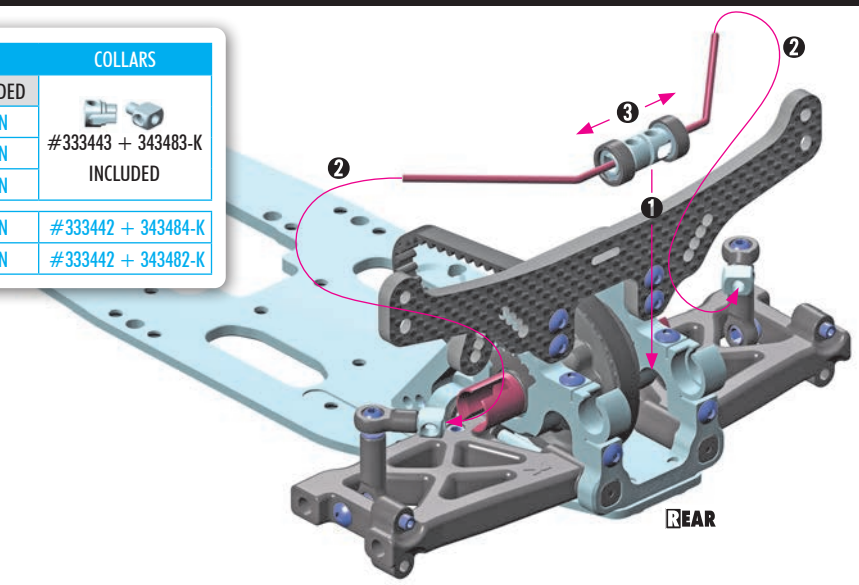

2. REAR SUSPENSION

Page 17 / Step 3

2x 980210 P 2x10

2x L=R

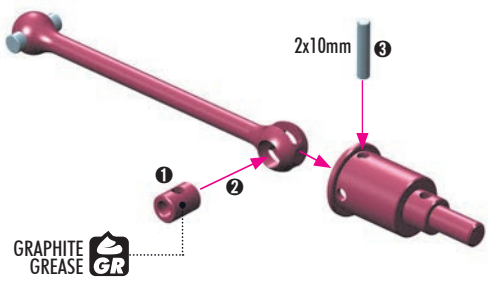

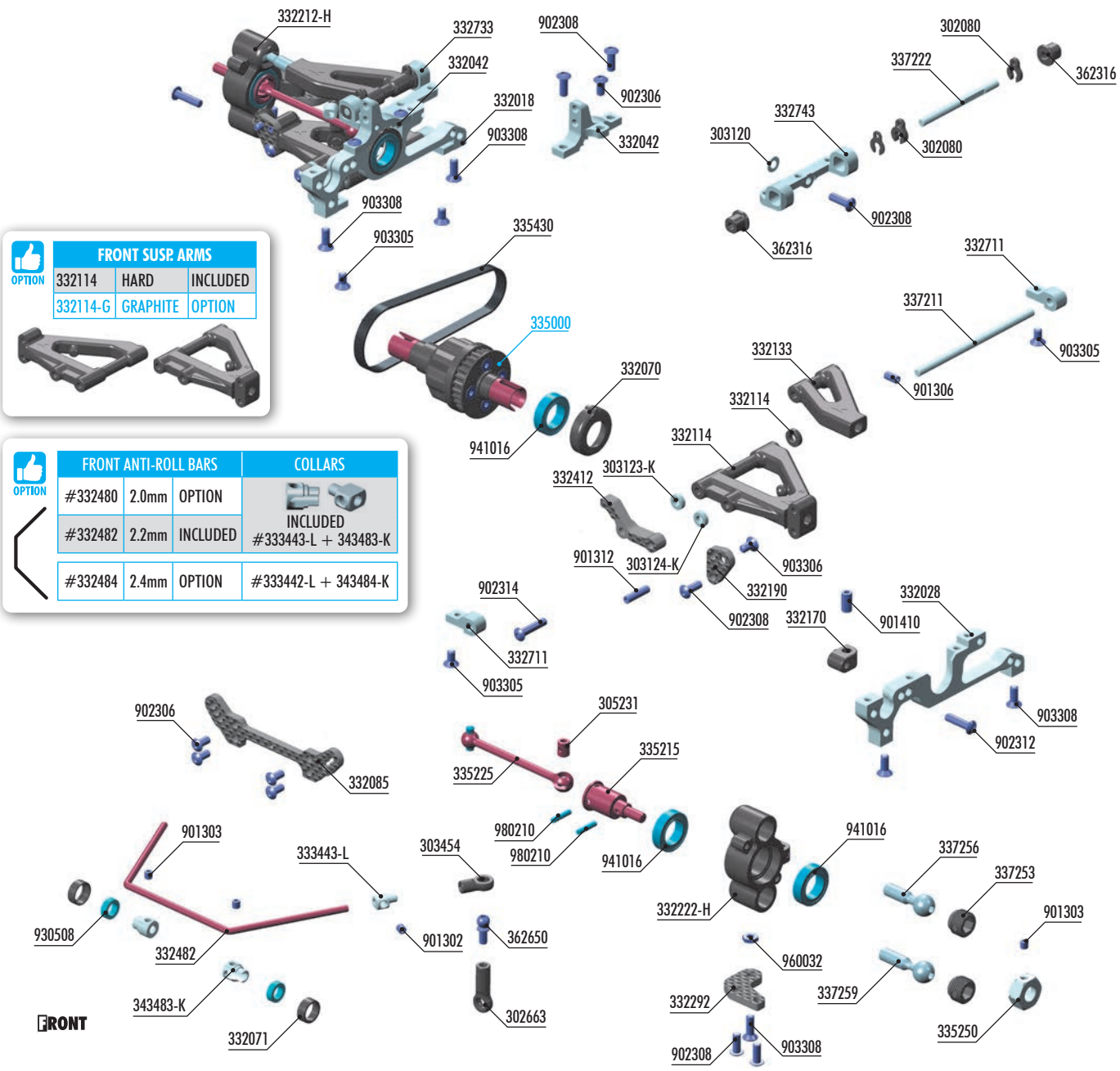

BAG 04

302080	CASTER CLIPS SET 4+3+2+1mm (2)
302663	COMPOSITE BALL JOINT 4.9mm - OPEN - V2 (8)
303120	SET OF ALU SHIM (0.5mm, 1.5mm, 2.5mm)
303123-K	ALU SHIM 3x6x2.0mm - BLACK (10)
303124-K	ALU SHIM 3x6x2.5mm - BLACK (10)
303454	BALL JOINT 4.9mm - OPEN (4)
305231	DRIVE SHAFT COUPLING - HUDY SPRING STEEL™
332018	ALU LOWER BULKHEAD FRONT RIGHT - BLACK - SWISS 7075 T6
332028	ALU LOWER BULKHEAD FRONT LEFT - BLACK - SWISS 7075 T6
332042	ALU UPPER CLAMP FRONT (L+R) - BLACK - SWISS 7075 T6
332070	COMPOSITE ADJUST. BALL-BEARING HUB (4)
332071	COMPOSITE BALL-BEARING HUB (4)
332085	CARBON SHOCK TOWER FRONT - 1 DOT - 2 POSITIONS
332114	COMPOSITE SUSPENSION ARM FRONT LOWER FOR CARBON EXTENSION - HARD
332133	COMPOSITE SUSP. ARM FRONT UPPER WITH HOLE - HARD
332170	COMPOSITE SUSP. ARM BACKSTOP (2)
332190	CARBON FRONT SHOCK ABSORBER ADAPTER (L+R)
332212-H	COMPOSITE STEERING BLOCK RIGHT FOR AERO DISC - HARD
332222-H	COMPOSITE STEERING BLOCK LEFT FOR AERO DISC - HARD
332292	NT1'26 CARBON EXTENSION FOR STEERING BLOCK (L+R)
332412	NT1'26 CARBON FRONT DOWNSTOP BACKSTOP (L+R)
332482	ANTI-ROLL BAR FRONT 2.2mm
332711	ALU LOWER 2-PIECE FRONT SUSPENSION HOLDER - BLACK (1)
332733	ALU UPPER ARM HOLDER RIGHT - BLACK - SWISS 7075 T6 - SET
332743	ALU UPPER ARM HOLDER LEFT - BLACK - SWISS 7075 T6 - SET
333443-L	ALU ANTI-ROLL BAR COLLAR o2.2 - LIGHTWEIGHT (2)
335215	CVD AXLE - SUPER LIGHT - HUDY SPRING STEEL™
335225	CVD DRIVE SHAFT - FRONT - HUDY SPRING STEEL™
335250	ALU WHEEL HUB 12mm - BLACK (2)
335430	PUR®-REINFORCED DRIVE BELT FRONT 5 x 186mm
337211	FRONT LOWER INNER PIVOT PIN (2)
337222	FRONT UPPER PIVOT PIN WITH FLAT SPOT (2)
337253	COMPOSITE ADJUSTING NUT M10x1 WITH BALL CUP (4)
337256	STEEL PIVOT BALL 8.4mm (2)
337259	STEEL PIVOT BALL 8.4mm o2.6 L=25mm (2)
343483-K	ALU CUTTED ANTI-ROLL BAR COLLAR o2.3 - BLACK (2)
362316	OPEN ECCENTRIC BUSHING SET (2)
362650	BALL END 4.9mm WITH THREAD 6mm (2)
901302	HEX SCREW SB M3x2.5 (10)
901303	HEX SCREW SB M3x3 (10)
901306	HEX SCREW SB M3x6 (10)
901312	HEX SCREW SB M3x12 (10)
901410	HEX SCREW SB M4x10 (10)
902306	HEX SCREW SH M3x6 (10)
902308	HEX SCREW SH M3x8 (10)
902312	HEX SCREW SH M3x12 (10)
902314	HEX SCREW SH M3x14 (10)
903305	HEX SCREW SFH M3x5 (10)
903306	HEX SCREW SFH M3x6 (10)
903308	HEX SCREW SFH M3x8 (10)
930508	BALL-BEARING 5x8x2.5 STEEL SEALED - OIL (2)
941016	BALL-BEARING 10x16x4 RUBBER SEALED - OIL (2)
960032	NUT M3 - BLACK (10)
980210	PIN 2x10 (10)
335000	FRONT GEAR DIFFERENTIAL - SET

Numbers in parentheses ( ) refer to quantities when purchased separately.

4. FRONT SUSPENSION

Page 24 / Step 3

303123-K SHIM 3x6x2 2x
303124-K SHIM 3x6x2.5 2x
2x 332114 SHIM 3x7x2
2x 901312 SB M3x12
2x 902308 SH M3x8
2x 902314 SH M3x14
2x 903306 SFH M3x6

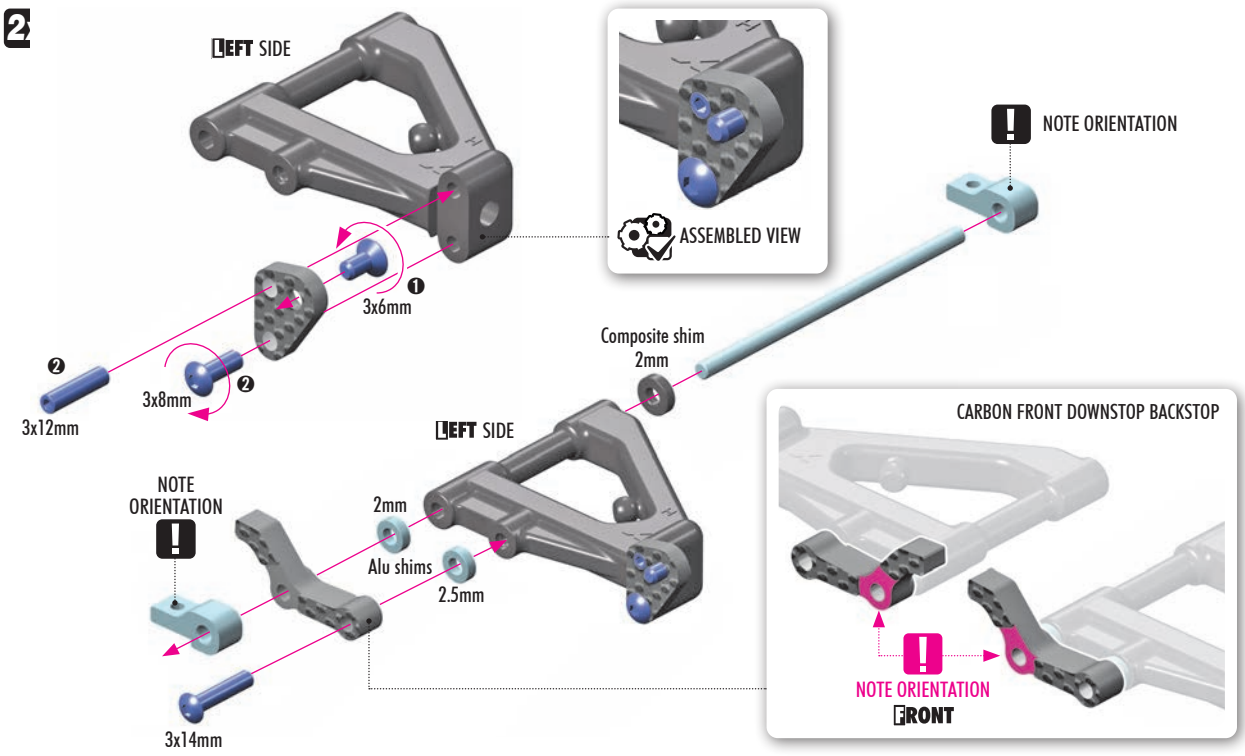

4. FRONT SUSPENSION

Page 25 / Step 3

0x 303120 SHIM 3x6x0.5
2x 902306 SH M3x6
0x 902308 SH M3x8

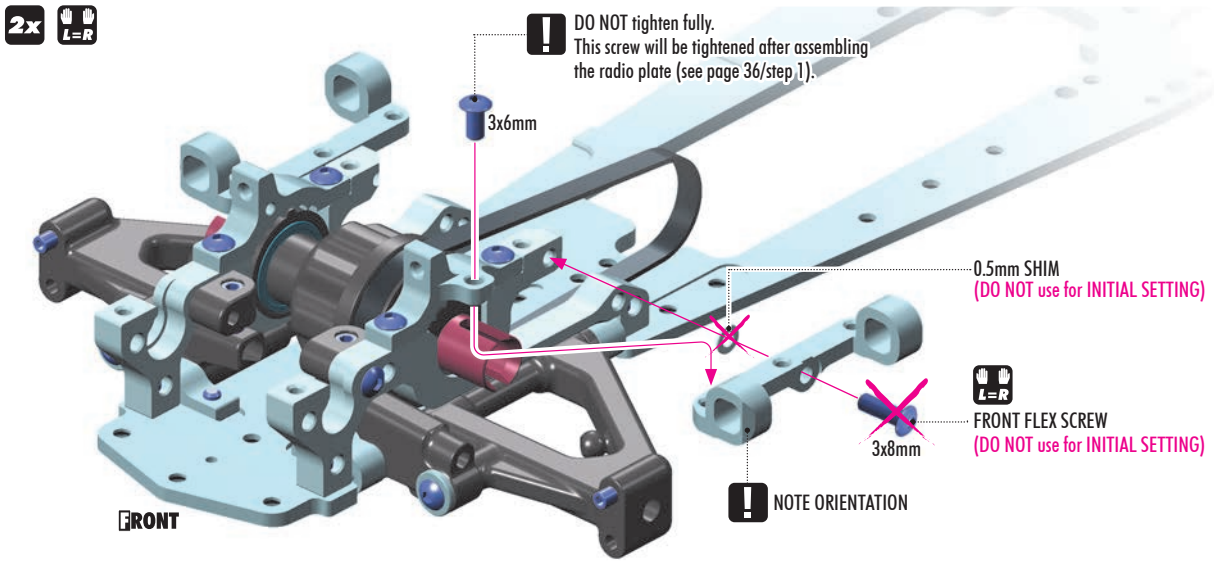

4. FRONT SUSPENSION

Page 26 / Step 2

4x 902306 SH M3x6

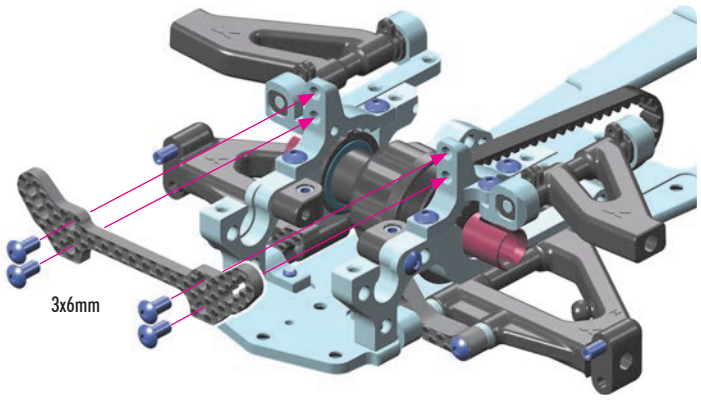

OPTION #332087
CARBON SHOCK TOWER FRONT - 2 POSITIONS - WAVE



OPTION #332086
CARBON SHOCK TOWER FRONT - 2 POSITIONS - 2 PCS

4. FRONT SUSPENSION

Page 27 / Step 1

0x 303123-K
SHIM 3x6x2

902308
SH M3x8
2x

903308
SFH M3x08
2x

2x 960032
N M3

2x L=R

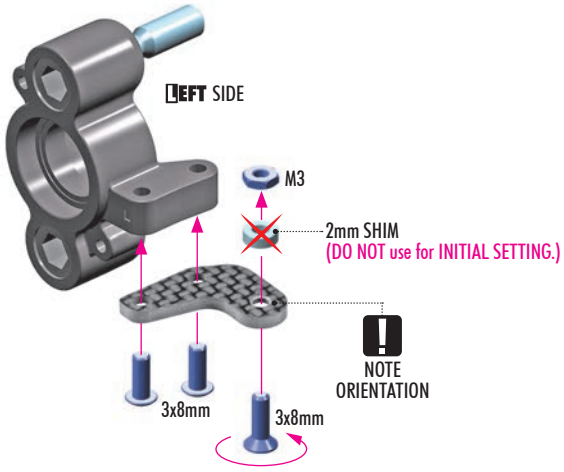

OPTION

STEERING BLOCK				
#332212	0°	RIGHT	M	OPTION
#332212-H	0°	RIGHT	H	INCLUDED
#332212-G	0°	RIGHT	G	OPTION
#332213	1°	RIGHT	-	OPTION
#332222	0°	LEFT	M	OPTION
#332222-H	0°	LEFT	H	INCLUDED
#332222-G	0°	LEFT	G	OPTION
#332223	1°	LEFT	-	OPTION



4. FRONT SUSPENSION

Page 27 / Step 2

~~901302~~
~~SB M3x2.5~~

2x 980210
P 2x10

2x L=R

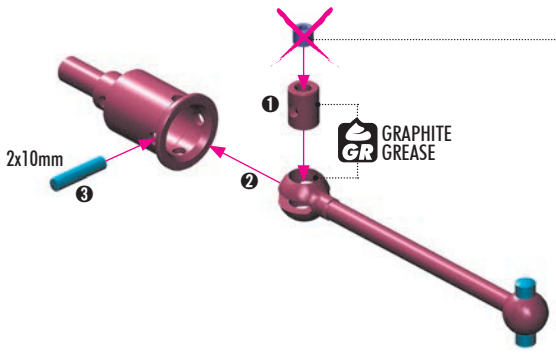



5. FRONT TRANSMISSION

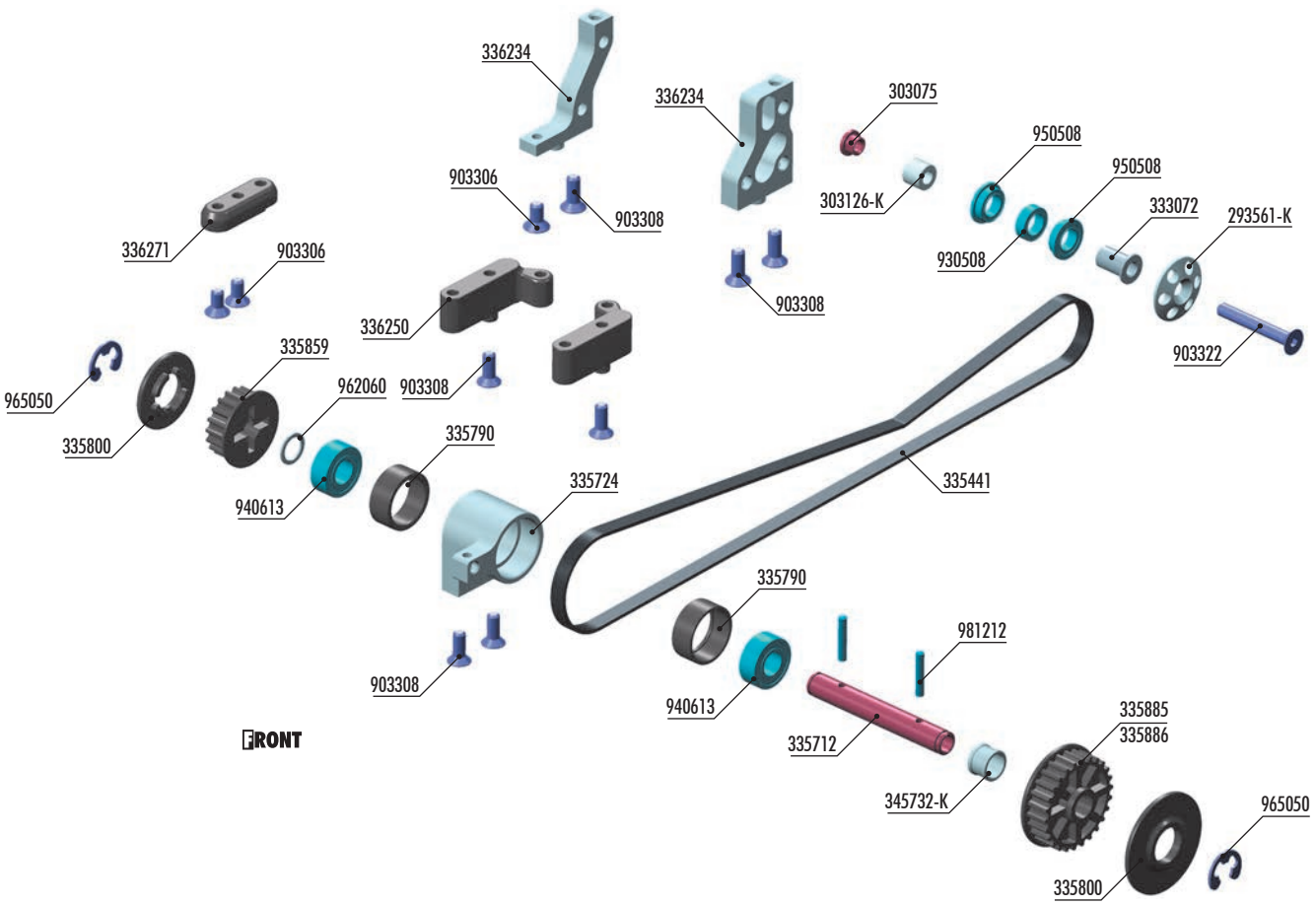

OPTION #335443
LOW FRICTION DRIVE BELT SIDE 4.5 X 396mm



OPTION #335801-0
LOW FRICTION COMPOSITE BELT PULLEY SET - GRAPHITE

BELT PULLEY 20T - 2-SPEED CENTER
BELT PULLEY 18T - 2-SPEED SIDE
BELT PULLEY 19T - MID-CENTER
BELT PULLEY 25T - MID-SIDE
BELT PULLEY 26T - MID-SIDE



OPTION #345732-0
ALU MIDDLE SHAFT LOCATING COLLAR - SHORT - LIGHT-WEIGHT - ORANGE



BAG 05

293561-K	HUDY ALU REAR WING SHIM - BLACK (2)	336250	COMPOSITE BATTERY MOUNT L+R (2)
303126-K	ALU SHIM 3x6x5.0MM - BLACK (10)	336271	COMPOSITE BATTERY PLATE HOLDER
303075	BELT TENSIONER STEEL BUSHING (2)	345732-K	ALU MIDDLE SHAFT LOCATING COLLAR - SHORT - BLACK
333072	BELT TENSIONER SET		
335441	PUR®-REINFORCED DRIVE BELT SIDE 4.5 x 390 MM	903306	HEX SCREW SFH M3x6 (10)
335712	FRONT MIDDLE SHAFT - HUDY SPRING STEEL™ - LIGHTWEIGHT	903308	HEX SCREW SFH M3x8 (10)
335724	ALU FRONT MIDDLE SHAFT HOLDER - BLACK - SET	903322	HEX SCREW SFH M3x22 (10)
335790	COMPOSITE BALL-BEARING BUSHING FOR MIDDLE SHAFT (2)	930508	BALL-BEARING 5x8x2.5 STEEL SEALED - OIL (2)
335800	COMPOSITE BELT PULLEY COVER SET	940613	BALL-BEARING 6x13x5 RUBBER SEALED - OIL (2)
335859	COMPOSITE BELT PULLEY 19T - MID-CENTER	950508	BALL-BEARING 5x8x2.5 FLANGED - STEEL SEALED - OIL (2)
335885	COMPOSITE BELT PULLEY 25T - MID-SIDE	962060	WASHER S 6x8x0.5 (10)
335886	COMPOSITE BELT PULLEY 26T - MID-SIDE	965050	E-CLIP 5 (10)
336234	ALU RADIO PLATE MOUNTS (L+R) - SWISS 7075 T6 - BLACK	981212	PIN 2x12 (10)

Numbers in parentheses ( ) refer to quantities when purchased separately.

5. FRONT TRANSMISSION

1x 303126-K SHIM 3x6x5

1x 903322 SFH M3x22

1x 930508 BB 5x8x2.5

2x 950508 BB 5x8x2.5

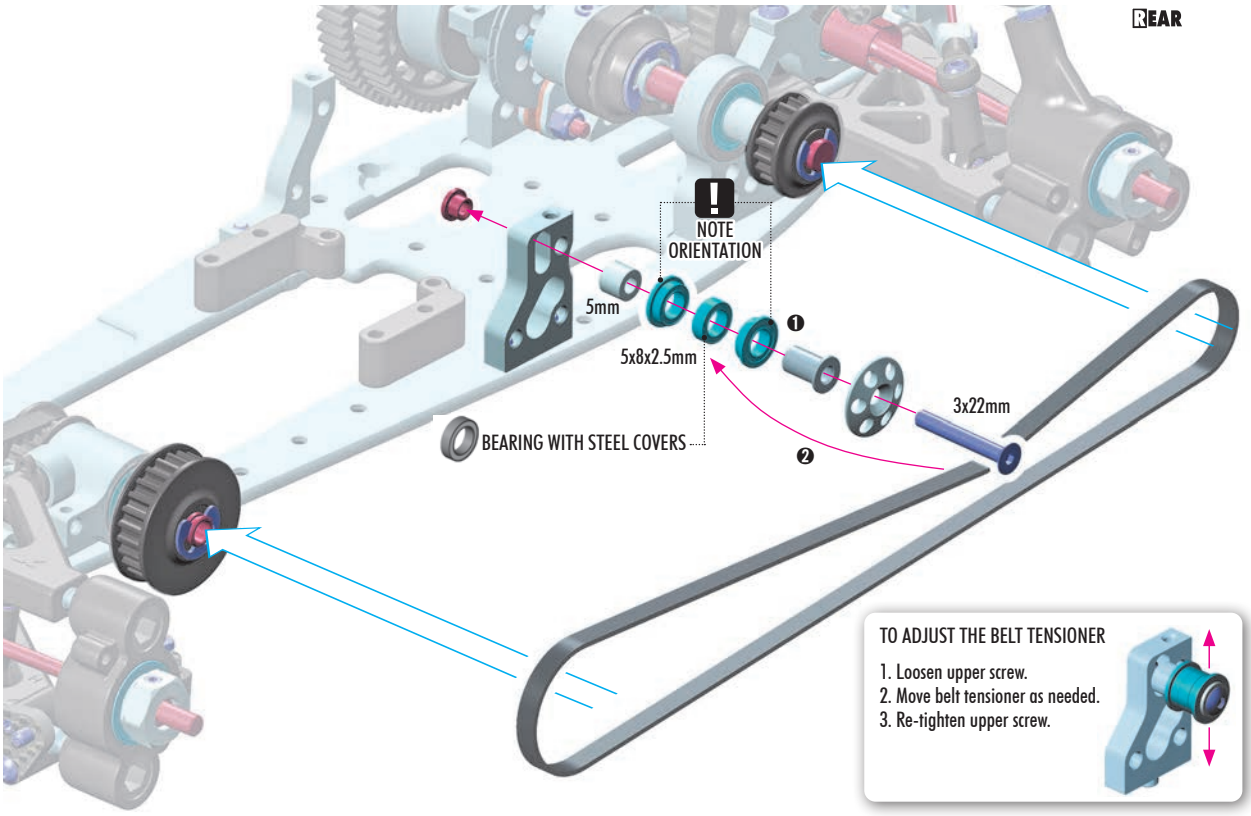

6. STEERING

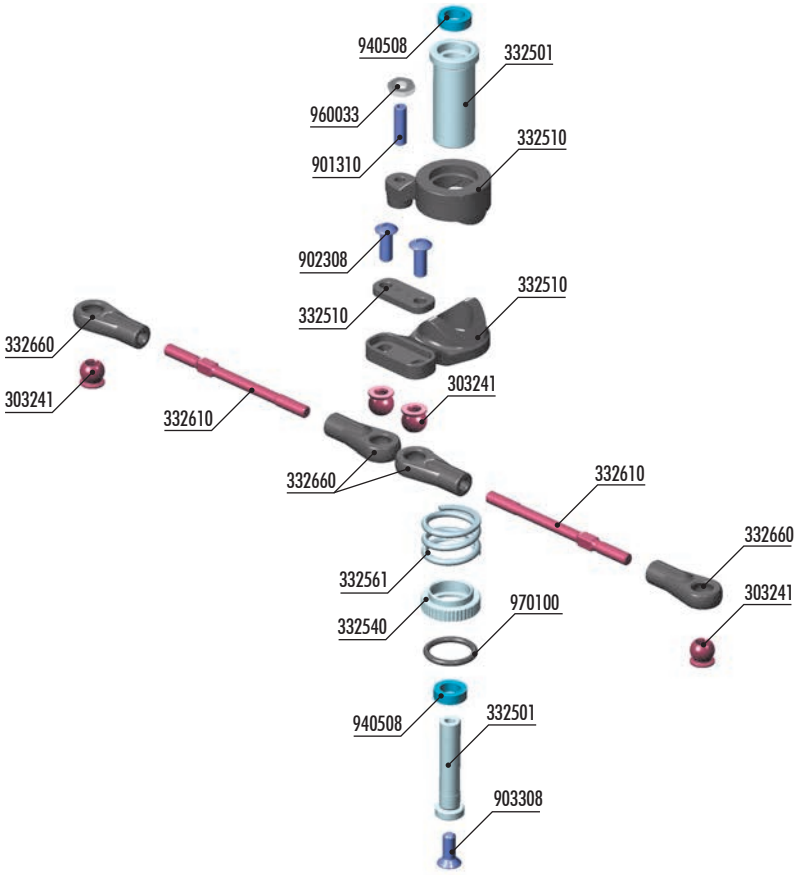

BAG 06

303241	PIVOT BALL UNIVERSAL 5.8 MM WITH HEX (4)	901310	HEX SCREW SB M3x10 (10)
332501	SERVO SAVER WITH CHASSIS LOCK COMPLETE SET	902308	HEX SCREW SH M3x8 (10)
332510	COMPOSITE SERVO SAVER	903308	HEX SCREW SFH M3x8 (10)
332540	ALU SERVO SAVER ADJUSTABLE NUT	940508	BALL-BEARING 5x8x2.5 RUBBER SEALED - OIL (2)
332561	SERVO SAVER SPRING C=14	960033	NUT M3 - THIN (10)
332610	ADJ. TURNBUCKLE L/R 42 MM - HUDY SPRING STEEL™ (2)	970100	O-RING 10 x 1.5 (10)
332660	COMPOSITE STEERING & SERVO BALL JOINT 5.8 MM (4+2)		

Numbers in parentheses ( ) refer to quantities when purchased separately.

7. FUEL TANK & ELECTRONICS

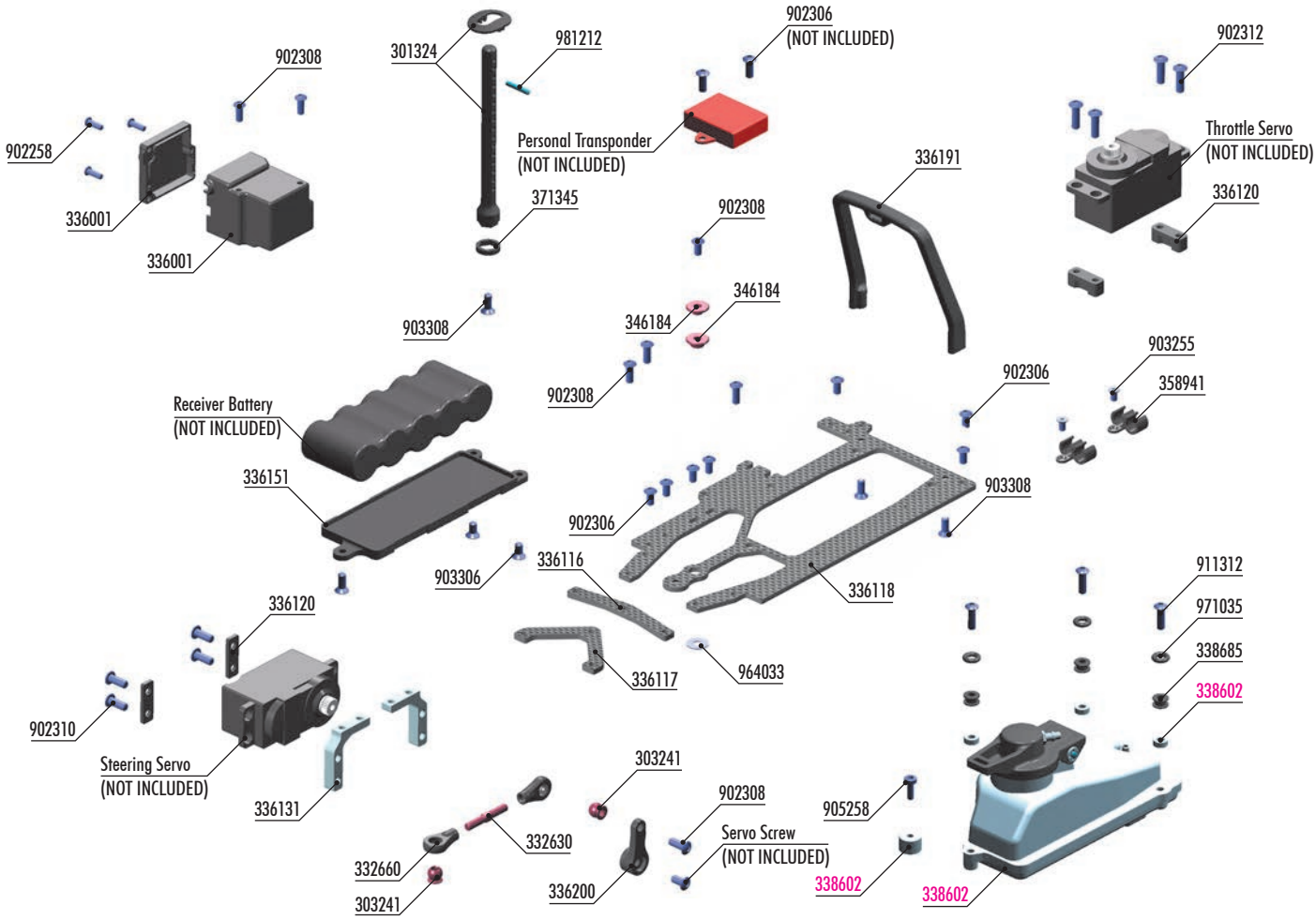

BAG 07

301324	FRONT BODY MOUNT SET +2MM HEIGHT
303241	BALL UNIVERSAL 5.8 MM HEX (4)
332630	ADJ. TURNBUCKLE L/R 22 MM - HUDY SPRING STEEL™ (2)
332660	COMPOSITE STEERING & SERVO BALL JOINT 5.8 MM (4+2)
336001	COMPOSITE RECEIVER CASE - COMPACT SIZE
336116	CARBON FRONT UPPER BRACE
336117	CARBON FRONT UPPER BRACE - TRIANGLE
336118	CARBON RADIO PLATE - MULTI-FLEX™
336120	COMPOSITE STEERING SERVO HOLDER - SET
336131	ALU STEERING SERVO MOUNT - BLACK (2)
336151	COMPOSITE BATTERY PLATE
336191	COMPOSITE ROLL-OVER BAR WITH EYELET
336200	STEERING SERVO ARMS - SET
338685	FUEL TANK MOUNTING GROMMET (3)
346184	ALU BUSHING FOR RADIO PLATE FLEX - HARD COATED (1+1)
358941	COMPOSITE TUBING HOLDER FOR FUEL TANK (2)
371345	COMPOSITE SHIM FOR BODY POST (2)

902258	HEX SCREW SH M2.5x8 (10)
902306	HEX SCREW SH M3x6 (10)
902308	HEX SCREW SH M3x8 (10)
902310	HEX SCREW SH M3x10 (10)
902312	HEX SCREW SH M3x12 (10)
903255	HEX SCREW SFH M2.5x5 (10)
903306	HEX SCREW SFH M3x6 (10)
903308	HEX SCREW SFH M3x8 (10)
905258	SCREW PHILLIPS 2.5x8 (10)
911312	HEX SCREW FL. SH M3x12 (10)
964033	WASHER S 3.5x10x0.3 (10)
971035	SILICONE O-RING 3.5x2 (10)
981212	PIN 2x12 (10)
338602	FUEL TANK 75CC - SET - V3

Numbers in parentheses ( ) refer to quantities when purchased separately.

7. FUEL TANK & ELECTRONICS



1x 902308 SH M3x8



1x 964033 S 3.5x10x0.3

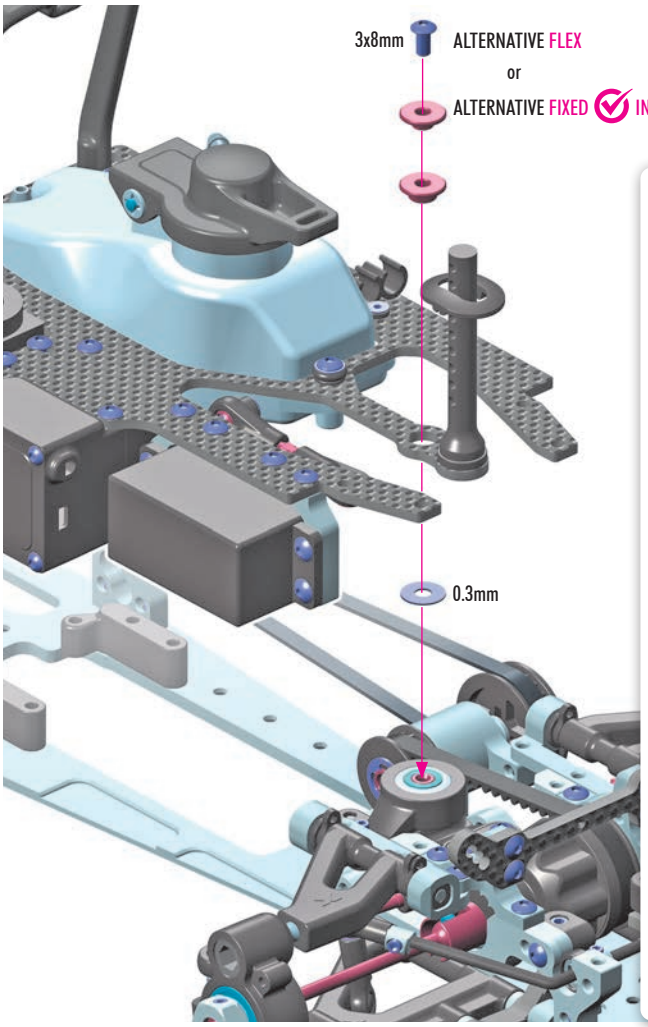

FRONT FLEX GRAPHITE BRACES
(DO NOT USE FOR INITIAL SETTING)

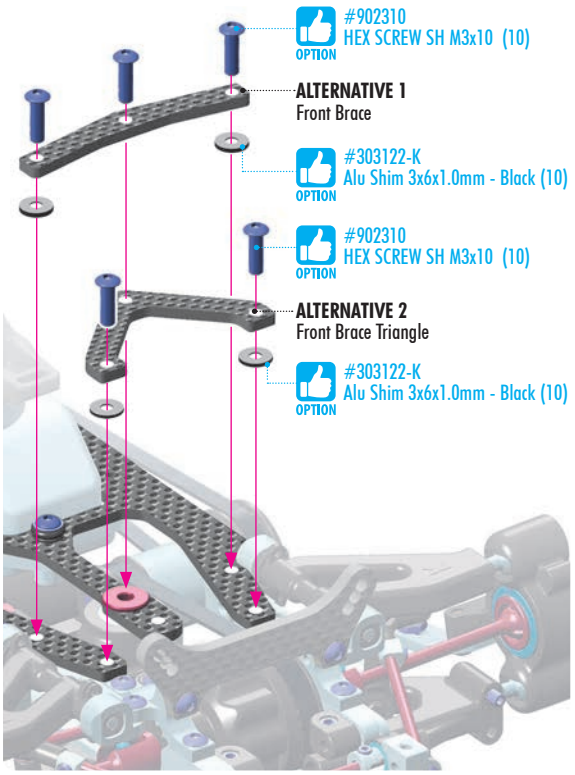

7. FUEL TANK & ELECTRONICS

Use an appropriate receiver battery pack.

The NT1 accommodates standard 5-cell receiver packs or optional micro-size packs.

Battery (NOT INCLUDED)

Use tape to mount the receiver battery pack to the lower holder.

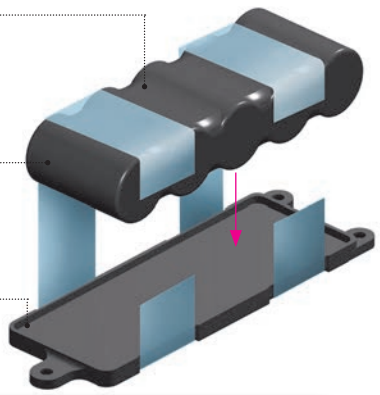

OPTION #107870 HUDY FIBRE-REINFORCED TAPE - BLACK



OPTION #336155 CARBON BATTERY PLATE - V2



OPTION #336157 CARBON BATTERY PLATE WITH 2x 15g WEIGHTS - SET

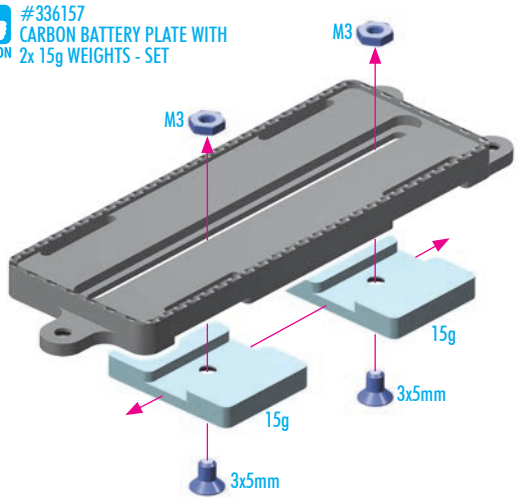

OPTION #336158 WEIGHT 15g (2)

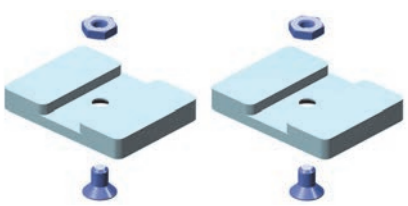

8. ENGINE & CLUTCH

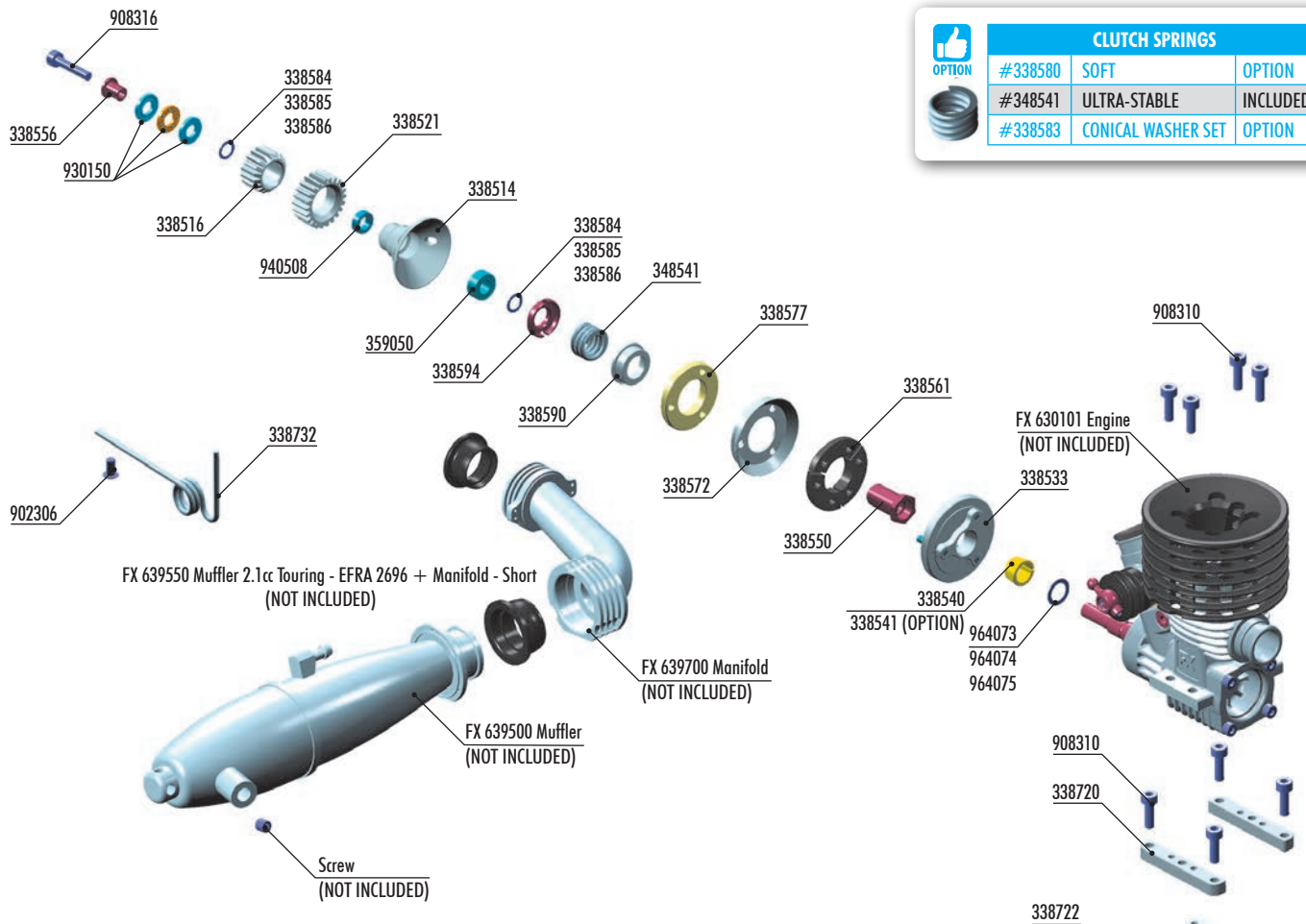

OPTION

CLUTCH SPRINGS		
#338580	SOFT	OPTION
#348541	ULTRA-STABLE	INCLUDED
#338583	CONICAL WASHER SET	OPTION

OPTION #338578
CLUTCH SHOE - HIGH-DYNAMIC - RED

OPTION

XRAY FLYWHEEL COLLAR		
#338540	ø7.0mm	INCLUDED
#338541	ø6.0mm	OPTION

OPTION

1ST PINION GEARS - XCA HARDCOATED		
#338515	15T (1st)	OPTION
#338516	16T (1st)	INCLUDED
#338517	17T (1st)	OPTION
#338518	18T (1st)	OPTION
#338519	19T (1st)	OPTION

OPTION

2ND PINION GEARS - XCA HARDCOATED		
#338520	20T (2nd)	OPTION
#338521	21T (2nd)	INCLUDED
#338522	22T (2nd)	OPTION
#338523	23T (2nd)	OPTION
#338524	24T (2nd)	OPTION
#338525	25T (2nd)	OPTION

OPTION #338714
ALU MONOBLOCK ENGINE MOUNT

BAG 08

338503	XCA ALU NICKEL COATED CLUTCH - SET - ULTRA STABILE
338514	XCA ALU NICKEL COATED CLUTCHBELL - HIGH DYNAMIC
338516	XCA ALU 7075 T6 HARDCOATED PINION GEAR - 16T (1ST)
338521	XCA ALU 7075 T6 HARDCOATED PINION GEAR - 21T (2ND)
338533	FLYWHEEL REVERSE - FLAT - ALU 7075 T6 - HARDCOATED - 32mm
338540	FLYWHEEL COLLAR 7mm - NOVAROSSI
338541	FLYWHEEL COLLAR 6mm - PICCO (OPTION)
338550	FLYWHEEL NUT - HUDY SPRING STEEL™
338556	CLUTCH BELL BUSHING - HUDY SPRING STEEL™
338561	CLUTCH FLYWEIGHT SET - HIGH DYNAMIC
338572	ALU CLUTCH DISK - CONICAL - SWISS 7075 T6
338577	CLUTCH SHOE - HIGH DYNAMIC - YELLOW
338584	SHIM 5x7x0.2 (10)
338585	SHIM 5x7x0.3 (10)
338586	SHIM 5x7x0.5 (10)
338590	CLUTCH SPRING CUP - ALU 7075 T6
338594	CLUTCH PRELOAD ADJ. NUT - HUDY SPRING STEEL™
338720	ALU STAND FOR ENGINE MOUNT (2)
338722	ALU ENGINE MOUNTS - LOWER (L+R)
338732	EXHAUST MOUNTING WIRE - EXTRA-LONG
348541	CLUTCH SPRING - ULTRA-STABILE
359050	BALL-BEARING 5x10x4 STEEL SEALED - GREASE (2)
902306	HEX SCREW SH M3x6 (10)
903310	HEX SCREW SFH M3x10 (10)
908310	HEX SCREW SOCKET HEAD CAP M3x10 (10)
908316	HEX SCREW SOCKET HEAD CAP M3x16 (10)
930150	CARBIDE BALL-BEARING AXIAL F5-10 5x10x4
940508	BALL-BEARING 5x8x2.5 RUBBER SEALED - OIL (2)
964073	WASHER S 7x10x0.2 (10)
964074	WASHER S 7x10x0.3 (10)
964075	WASHER S 7x10x0.5 (10)

Numbers in parentheses ( ) refer to quantities when purchased separately.

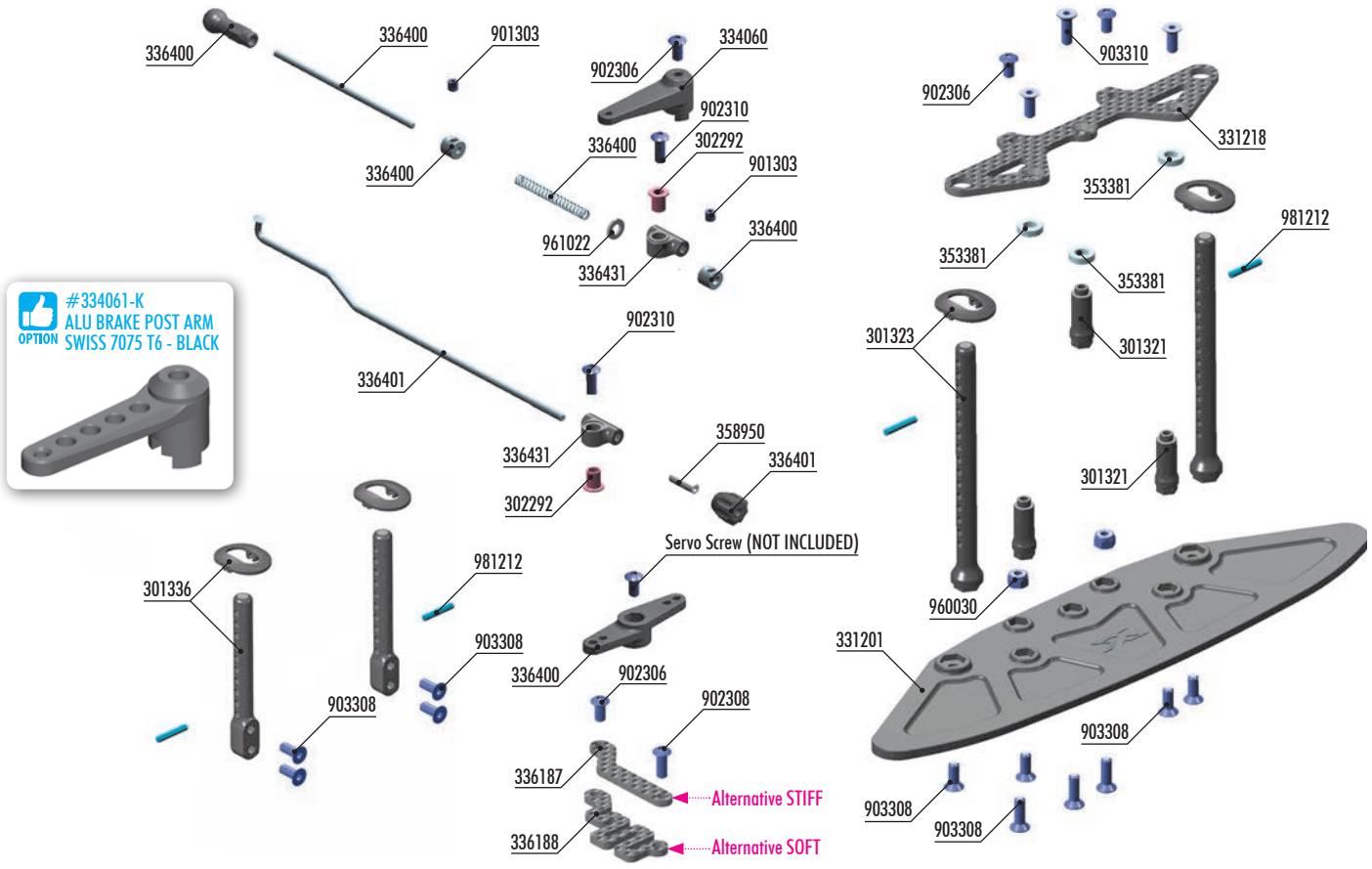

BAG 09

301321	COMPOSITE BRACE FOR BUMPER (2)
301323	FRONT BODY MOUNT SET +1mm HEIGHT
301336	COMPOSITE REAR 6MM ADJUSTABLE BODY MOUNT SET
302292	STEEL STEERING BUSHING LONG (4)
331201	COMPOSITE WIDE BUMPER
331218	CARBON UPPER HOLDER FOR BUMPER
334060	COMPOSITE BRAKE POST ARM
336187	CARBON REAR STIFFENER
336188	CARBON REAR WAVE STIFFENER
336400	THROTTLE SYSTEM SET
336401	BRAKE SYSTEM SET
336431	COMPOSITE BRAKE/THROTTLE SERVO ARM PIVOT (2)
353381	ALU SHIM 4x7.5x2 (4)
358950	SILICONE TUBING 1M (2.4 x 5.5mm)
358951	SIL. TUBING 1M (2.4 x 5.5mm) YELLOW (OPTION)
901303	HEX SCREW SB M3x3 (10)
902306	HEX SCREW SH M3x6 (10)
902308	HEX SCREW SH M3x8 (10)
902310	HEX SCREW SH M3x10 (10)
903308	HEX SCREW SFH M3x8 (10)
903310	HEX SCREW SFH M3x10 (10)
960030	NUT M3 (10)
961022	WASHER S 2.2 (10)
981212	PIN 2x12 (10)

Numbers in parentheses ( ) refer to quantities when purchased separately.

9. CARB LINKAGE & BODYMOUNTS — Page 43 / Step 1

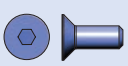



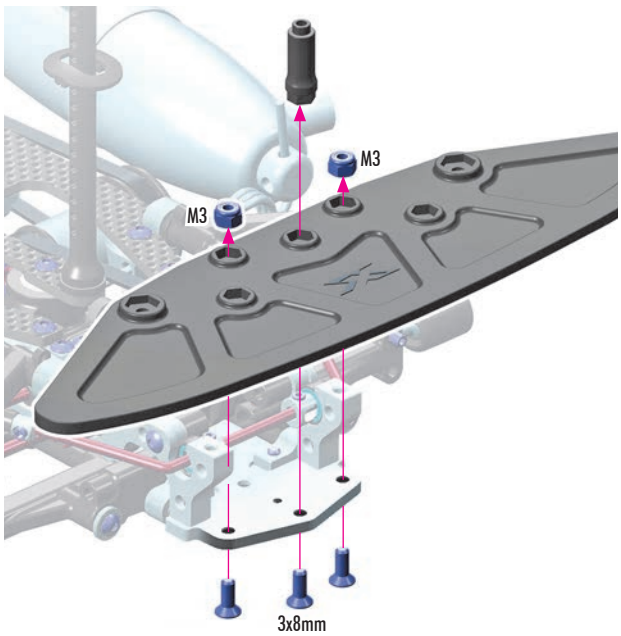

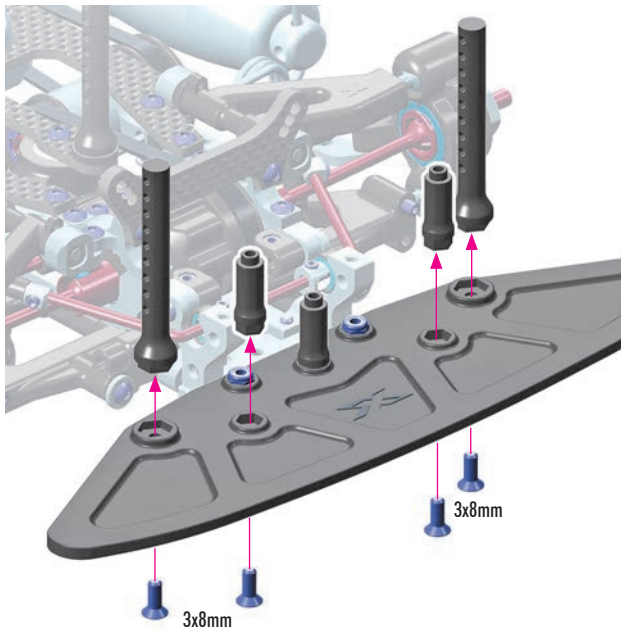

9. CARB LINKAGE & BODYMOUNTS

Page 43 / Step 2

3x 353381 SHIM 4x7.5x2

2x 902306 SH M3x6

3x 903310 SFH M3x10

2x 981212 P 2x12

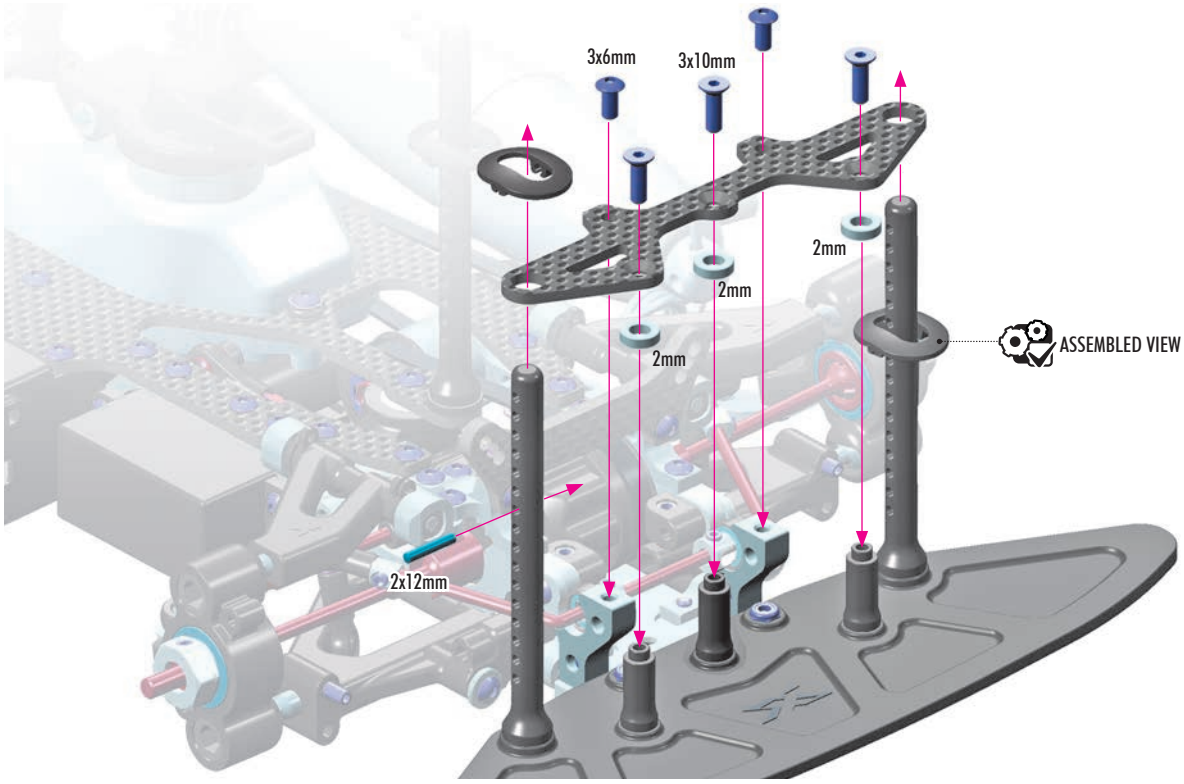

9. CARB LINKAGE & BODYMOUNTS

Page 43 / Step 3

4x 903308 SFH M3x8

2x 981212 P 2x12

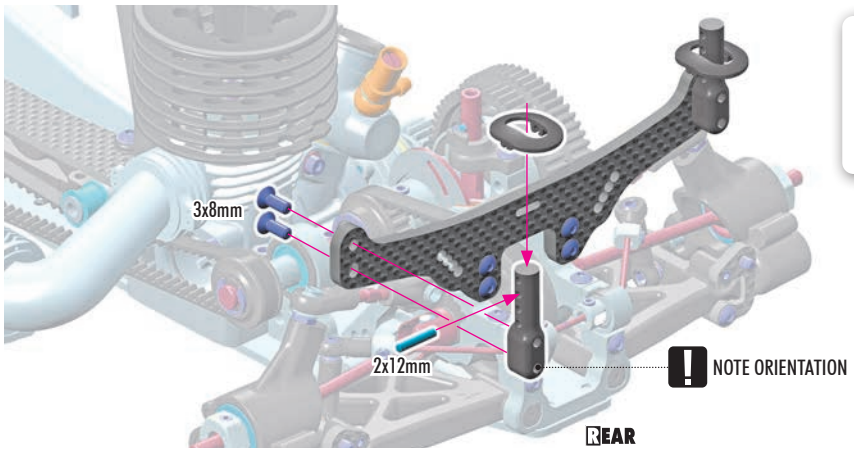

OPTION

REAR BODY MOUNTS		
#301336	0mm	INCLUDED
#301337	+1mm	OPTION
#301338	+2mm	OPTION

9. CARB LINKAGE & BODYMOUNTS

Page 44 / Step 1

2x 902310 SH M3x10

1x 901303 SB M3x3

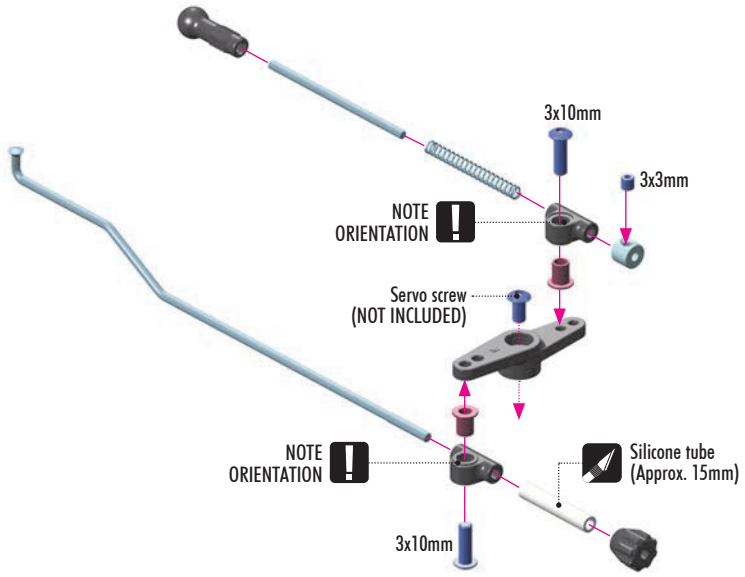

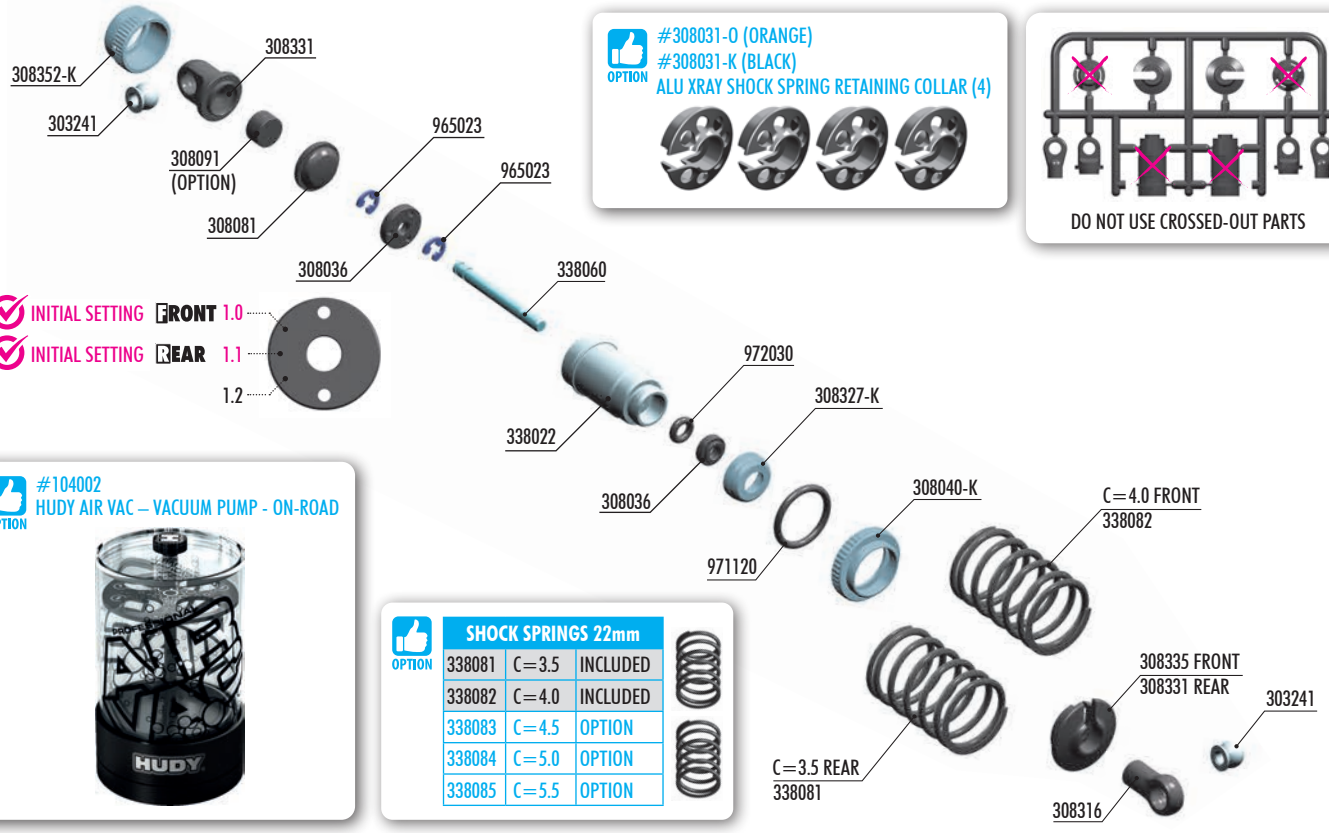

BAG 10

303241 BALL UNIVERSAL 5.8mm HEX (4)
308036 COMPOSITE NON-ADJUSTABLE PISTONS - DELRIN - V3
308040-K SHOCK ADJ. NUT ALU + O-RING - BLACK (4)
308081 SHOCK ABSORBER MEMBRANE - LOW (4)
308091 SHOCK FOAM INSERTS - LOW (4) (OPTION)
308316 COMPOSITE SHOCK BALL JOINT - OPEN (4)
308327-K ALU CAP FOR XRAY SHOCK BODY - BLACK (2)
308331 COMPOSITE FRAME SHOCK PARTS 4-STEP - SHORT
308335 ULP COMPOSITE SHOCK PARTS WITH 2 HOLES
308352-K ALU SHOCK CAP-NUT WITH HOLE - BLACK (2)
338002-K ALU SHOCK ABSORBER 20.8mm SET - BLACK (2)
338022 ALU SHOCK BODY 20.8mm (2)
338060 HARDENED SHOCK SHAFT (2)

965023 E-CLIP 2.3 (10)
971120 O-RING 12x1.6 (10)
972030 SILICONE O-RING 3x2 (10)

338081 XRAY 3S SPRING-SET C=3.5 (2)
338082 XRAY 3S SPRING-SET C=4.0 (2)

Numbers in parentheses ( ) refer to quantities when purchased separately.

10. SHOCK ABSORBERS — Page 46 / Step 1



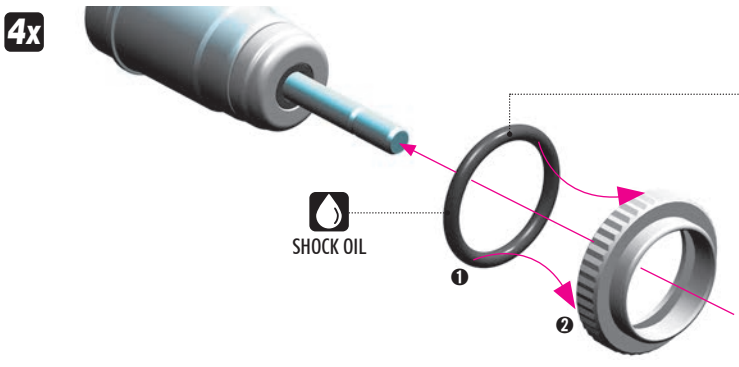

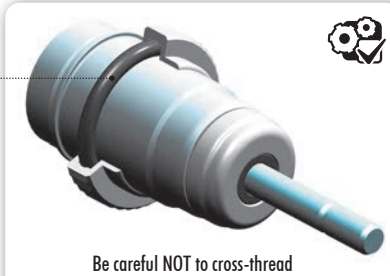

Be careful NOT to cross-thread the collar on the shock body.

10. SHOCK ABSORBERS — Page 46 / Step 2

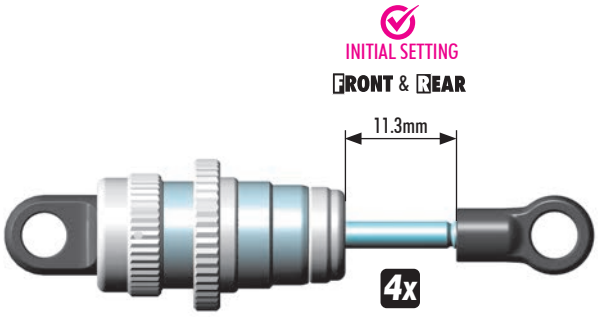

FINAL ASSEMBLY

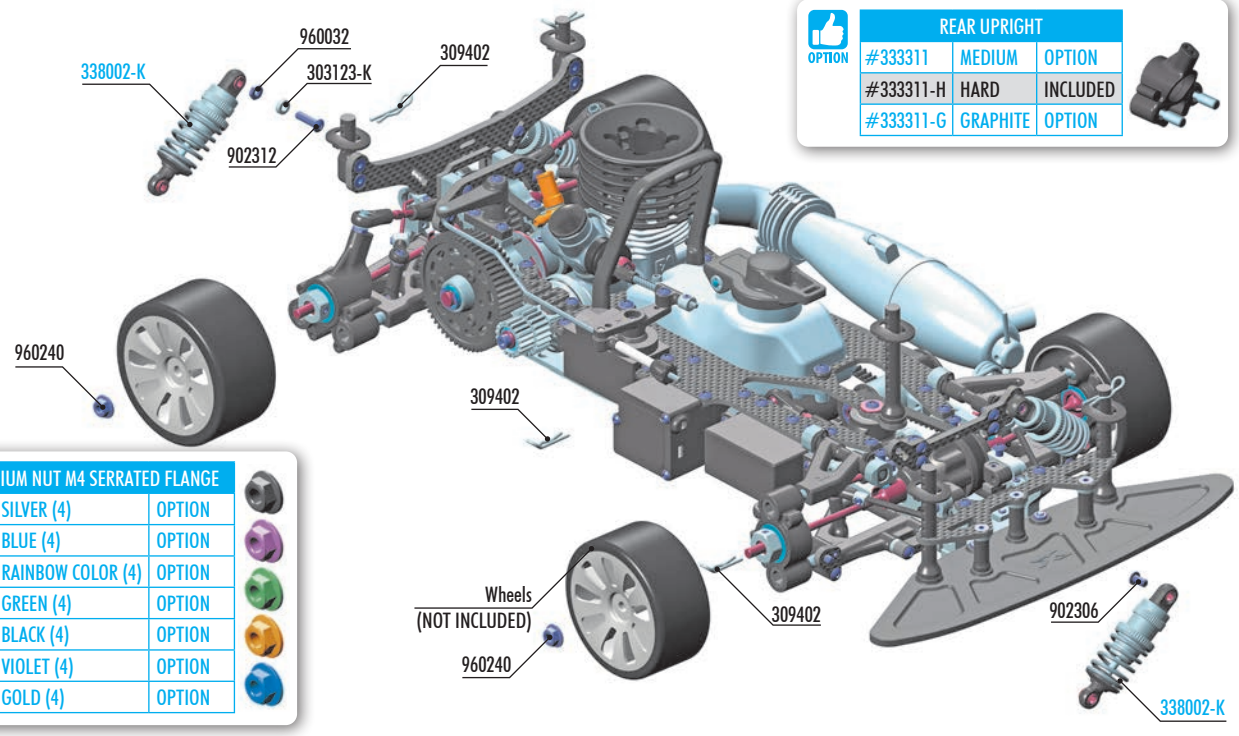

OPTION	REAR UPRIGHT		
	#333311	MEDIUM	OPTION
	#333311-H	HARD	INCLUDED
	#333311-G	GRAPHITE	OPTION

OPTION	HUDY TITANIUM NUT M4 SERRATED FLANGE		
	#296542	SILVER (4)	OPTION
	#296542-B	BLUE (4)	OPTION
	#296542-C	RAINBOW COLOR (4)	OPTION
	#296542-G	GREEN (4)	OPTION
	#296542-K	BLACK (4)	OPTION
	#296542-V	VIOLET (4)	OPTION
	#296542-Y	GOLD (4)	OPTION

BAG 09

303123-K	ALU SHIM 3x6x2.0mm - BLACK (10)
309402	BODY CLIP FOR 6mm BODY POST (4)
902306	HEX SCREW SH M3x6 (10)
902312	HEX SCREW SH M3x12 (10)
960032	NUT M3 (10)
960240	NUT M4 WITH SERRATED FLANGE (10)
338002-K	ALU SHOCK ABSORBER 20.8mm SET - BLACK (2)

Numbers in parentheses ( ) refer to quantities when purchased separately.

FINAL ASSEMBLY — Page 48 / Step 1



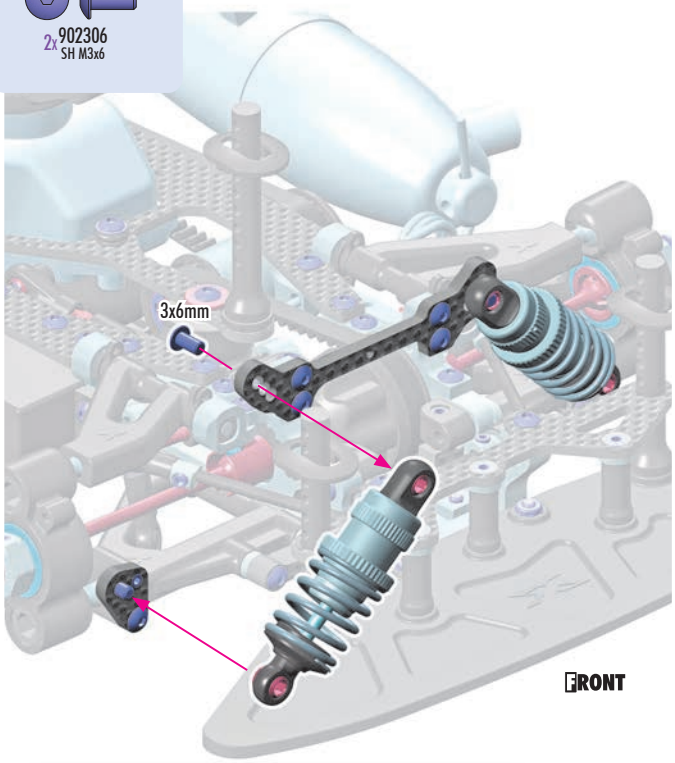

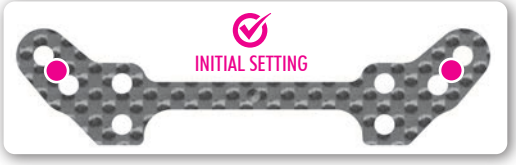

FINAL ASSEMBLY — Page 49 / Step 1



