1/10 ELECTRIC TOURING CAR

XRAY X4



INSTRUCTION MANUAL

FOR X4'26 EDITION

BEFORE YOU START

This is a high-competition, high-quality RC car intended for persons aged 16 years and older with previous experience building and operating RC model racing cars. This is NOT a toy; it is a precision racing model. This model racing car is NOT intended for use by beginners, inexperienced customers, or by children without direct supervision of a responsible, knowledgeable adult. If you DO NOT fulfill these requirements, please return the kit in unused and unassembled form back to the shop where you have purchased it.

Before building and operating your XRAY, YOU MUST read through all of the operating instructions and instruction manual and fully understand them to get the maximum enjoyment and prevent unnecessary damage.

Read carefully and fully understand the instructions before beginning assembly.

Make sure you review this entire manual, download and use set-up book from the web, and examine all details carefully. If for some reason you decide this is NOT what you wanted or expected, DO NOT continue any further. Your hobby dealer can NOT accept your kit for return or exchange after it has been partially or fully assembled.

Contents of the box may differ from pictures. In line with our policy of continuous product development, the exact specifications of the kit may vary without prior notice.

CUSTOMER SUPPORT

We have made every effort to make these instructions as easy to understand as possible. However, if you have any difficulties, problems, or questions, please DO NOT hesitate to contact the XRAY support team at info@teamxray.com. Also, please visit our Web site at www.teamxray.com to find the latest updates, set-up information, option parts, and many other goodies. We pride ourselves on taking excellent care of our customers.

You can join thousands of XRAY fans and enthusiasts in our online community at:
www.teamxray.com

XRAY Europe
K Vystavisku 6992
91101 Trenčín
Slovakia, EUROPE
Phone: 421-32-7401100
Fax: 421-32-7401109
E-mail: info@teamxray.com

XRAY USA
RC America, 2030 Century Center Blvd #15
Irving, TX 75062
USA
Phone: (214) 744-2400
Fax: (214) 744-2401
E-mail: xray@rcamerica.com

FAILURE TO FOLLOW THESE INSTRUCTIONS WILL BE CONSIDERED AS ABUSE AND/OR NEGLECT.

SAFETY PRECAUTIONS

Contains:
LEAD (CAS 7439-92-1) ANTIMONY (CAS 7440-36-0)
WARNING: This product contains a chemical known to the state of California to cause cancer and birth defects or other reproductive harm.
CAUTION: CANCER HAZARD
Contains lead, a listed carcinogen. Lead is harmful if ingested. Wash thoroughly after using. DO NOT use product while eating, drinking or using tobacco products. May cause chronic effects to gastrointestinal tract, CNS, kidneys, and blood. MAY CAUSE BIRTH DEFECTS.

When building, using and/or operating this model always wear protective glasses and gloves.

Take appropriate safety precautions prior to operating this model. You are responsible for this model's assembly and safe operation! Please read the instruction manual before building and operating this model and follow all safety precautions. Always keep the instruction manual at hand for quick reference, even after completing the assembly. Use only genuine and original authentic XRAY parts for maximum performance. Using any third party parts on this model will void guaranty immediately.

Improper operation may cause personal and/or property damage. XRAY and its distributors have no control over damage resulting from shipping, improper construction, or improper usage. XRAY assumes and accepts no responsibility for personal and/or property damages resulting from the use of improper building materials, equipment and operations. By purchasing any item produced by XRAY, the buyer expressly warrants that he/she is in compliance with all applicable federal, state and local laws and regulation regarding the purchase, ownership and use of the item. The buyer expressly agrees to indemnify and hold harmless XRAY for all claims resulting directly or indirectly from the purchase, ownership or use of the product. By the act of assembling or operating this product, the user accepts all resulting liability. If the buyer is NOT prepared to accept this liability, then he/she should return this kit in new, unassembled, and unused condition to the place of purchase.

IMPORTANT NOTES – GENERAL

- This product is NOT suitable for children under 16 years of age without the direct supervision of a responsible and knowledgeable adult.
- Carefully read all manufacturers warnings and cautions for any parts used in the construction and use of your model.
- Assemble this kit only in places away from the reach of very small children.
- First-time builders and users should seek advice from people who have building experience in order to assemble the model correctly and to allow the model to reach its performance potential.
- Exercise care when using tools and sharp instruments.
- Take care when building, as some parts may have sharp edges.
- Keep small parts out of reach of small children. Children must NOT be allowed to put any parts in their mouth, or pull vinyl bag over their head.
- Read and follow instructions supplied with paints and/or cement, if used (NOT included in kit).
- Immediately after using your model, DO NOT touch equipment on the model such as the motor and speed controller, because they generate high temperatures. You may seriously burn yourself seriously touching them.
- Follow the operating instructions for the radio equipment at all times.
- DO NOT put fingers or any objects inside rotating and moving parts, as this may cause damage or serious injury as your finger, hair, clothes, etc. may get caught.
- Be sure that your operating frequency is clear before turning on or running your model, and never share the same frequency with somebody else at the same time. Ensure that others are aware of the operating frequency you are using and when you are using it.
- Use a transmitter designed for ground use with RC cars. Make sure that no one else is using the same frequency as yours in your operating area. Using the same frequency at the same time, whether it is driving, flying or sailing, can cause loss of control of the RC model, resulting in a serious accident.
- Always turn on your transmitter before you turn on the receiver in the car. Always turn off the receiver before turning your transmitter off.
- Keep the wheels of the model off the ground when checking the operation of the radio equipment.
- Disconnect the battery pack before storing your model.
- When learning to operate your model, go to an area that has no obstacles that can damage your model if your model suffers a collision.
- Remove any sand, mud, dirt, grass or water before putting your model away.
- If the model behaves strangely, immediately stop the model, check and clear the problem.
- To prevent any serious personal injury and/or damage to property, be responsible when operating all remote controlled models.
- The model car is NOT intended for use on public places and roads or areas where its operation can conflict with or disrupt pedestrian or vehicular traffic.
- Because the model car is controlled by radio, it is subject to radio interference from many sources that are beyond your control. Since radio interference can cause momentary loss of control, always allow a safety margin in all directions around the model in order to prevent collisions.
- DO NOT use your model:
  - Near real cars, animals, or people that are unaware that an RC car is being driven.
  - In places where children and people gather
  - In residential districts and parks
  - In limited indoor spaces
  - In wet conditions
  - In the street
  - In areas where loud noises can disturb others, such as hospitals and residential areas.
  - At night or anytime your line of sight to the model may be obstructed or impaired in any way.

To prevent any serious personal injury and/or damage to property, please be responsible when operating all remote controlled models.

IMPORTANT NOTES – ELECTRICAL

- Insulate any exposed electrical wiring (using heat shrink tubing or electrical tape) to prevent dangerous short circuits. Take maximum care in wiring, connecting and insulating cables. Make sure cables are always connected securely. Check connectors for if they become loose. And if so, reconnect them securely. Never use RC models with damaged wires. A damaged wire is extremely dangerous, and can cause short-circuits resulting in fire. Please have wires repaired at your local hobby shop.
- Low battery power will result in loss of control. Loss of control can occur due to a weak battery in either the transmitter or the receiver. Weak running battery may also result in an out of control car if your car's receiver power is supplied by the running battery. Stop operation immediately if the car starts to slow down.
- When NOT using RC model, always disconnect and remove battery.
- DO NOT disassemble battery or cut battery cables. If the running battery short-circuits, approximately 300W of electricity can be discharged, leading to fire or burns. Never disassemble battery or cut battery cables.
- Use a recommended charger for the receiver and transmitter batteries and follow the instructions correctly. Over-charging, incorrect charging, or using inferior chargers can cause the batteries to become dangerously hot. Recharge battery when necessary. Continual recharging may damage battery and, in the worst case, could build up heat leading to fire. If battery becomes extremely hot during recharging, please ask your local hobby shop for check and/or repair and/or replacement.
- Regularly check the charger for potential hazards such as damage to the cable, plug, casing or other defects. Ensure that any damage is rectified before using the charger again. Modifying the charger may cause short-circuit or overcharging leading to a serious accident. Therefore DO NOT modify the charger.
- Always unplug charger when recharging is finished.
- DO NOT recharge battery while battery is still warm. After use, battery retains heat. Wait until it cools down before charging.
- DO NOT allow any metal part to short circuit the receiver batteries or other electrical/electronic device on the model.
- Immediately stop running if your RC model gets wet as may cause short circuit.
- Please dispose of batteries responsibly. Never put batteries into fire.

R/C & BUILDING TIPS

- Make sure all fasteners are properly tightened. Check them periodically.
- Make sure that chassis screws DO NOT protrude from the chassis.
- For the best performance, it is very important that great care is taken to ensure the free movement of all parts.
- Clean all ball-bearings so they move very easily and freely.
- Tap or pre-thread the plastic parts when threading screws.
- Self-tapping screws cut threads into the parts when being tightened. DO NOT use excessive force when tightening the self-tapping screws because you may strip out the thread in the plastic. We recommended you stop tightening a screw when you feel some resistance.
- Ask your local hobby shop for any advice.

Please support your local hobby shop. We at XRAY Model Racing Cars support all local hobby dealers. Therefore we ask you, if at all possible, to purchase XRAY products at your hobby dealer and give them your support like we do. If you have difficulty finding XRAY products, please check out www.teamxray.com to get advice, or contact us via email at info@teamxray.com, or contact the XRAY distributor in your country.

WARRANTY

XRAY guarantees this model kit to be free from defects in both material and workmanship within 30 days of purchase. The total monetary value under warranty will in no case exceed the cost of the original kit purchased. This warranty does NOT cover any components damaged by use or modification or as a result of wear. Part or parts missing from this kit must be reported within 30 days of purchase. No part or parts will be sent under warranty without proof of purchase. Should you find a defective or missing part, contact the local distributor. Service and customer support will be provided through local hobby store where you have purchased the kit, therefore make sure to purchase any XRAY products at your local hobby store. This model racing car is considered to be a high-performance racing vehicle. As such this vehicle will be used in an extreme range of conditions and situations, all which may cause premature wear or failure of any component. XRAY has no control over usage of vehicles once they leave the dealer, therefore XRAY can only offer warranty against all manufacturer's defects in materials, workmanship, and assembly at point of sale and before use. No warranties are expressed or implied that cover damage caused by what is considered normal use, or cover or imply how long any model cars' components or electronic components will last before requiring replacement.

Due to the high performance level of this model car you will need to periodically maintain and replace consumable components. Any and all warranty coverage will NOT cover replacement of any part or component damaged by neglect, abuse, or improper or unreasonable use. This includes but is NOT limited to damage from crashing, chemical and/or water damage, excessive moisture, improper or no maintenance, or user modifications which compromise the integrity of components. Warranty will NOT cover components that are considered consumable on RC vehicles. XRAY does NOT pay nor refund shipping on any component sent to XRAY or its distributors for warranty. XRAY reserves the right to make the final determination of the warranty status of any component or part.

Limitations of Liability
XRAY makes no other warranties expressed or implied. XRAY shall NOT be liable for any loss, injury or damages, whether direct, indirect, special, incidental, or consequential, arising from the use, misuse, or abuse of this product and/or any product or accessory required to operate this product. In no case shall XRAY's liability excess the monetary value of this product.

Take adequate safety precautions prior to operating this model. You are responsible for this model's assembly and safe operation.

Disregard of the any of the above cautions may lead to accidents, personal injury, or property damage. XRAY MODEL RACING CARS assumes no responsibility for any injury, damage, or misuse of this product during assembly or operation, nor any addictions that may arise from the use of this product.
All rights reserved.

QUALITY CERTIFICATE

XRAY MODEL RACING CARS uses only the highest quality materials, the best compounds for molded parts and the most sophisticated manufacturing processes of TQM (Total Quality Management). We guarantee that all parts of a newly-purchased kit are manufactured with the highest regard to quality. However, due to the many factors inherent in model racecar competition, we cannot guarantee any parts once you start racing the car. Products which have been worn out, abused, neglected or improperly operated will NOT be covered under warranty.
We wish you enjoyment of this high-quality and high-performance RC car and wish you best success on the track!

In line with our policy of continuous product development, the exact specifications of the kit may vary. In the unlikely event of any problems with your new kit, you should contact the model shop where you purchased it, quoting the part number.
We do reserve all rights to change any specification without prior notice. All rights reserved.

TOOLS REQUIRED



Ball Joint Wrench (HUDY #181110)



Pocket Hobby Knife (HUDY #188981)



Special Tool for turnbuckles, nuts (HUDY #181090)



Turnbuckle Wrench 4mm (HUDY #181040)



Turnbuckle Wrench 3mm (HUDY #181030)



HUDY Tweezers Straight (HUDY #188970)



HUDY Tweezers Curved (HUDY #188971)



Allen 1.5mm (#111545 - HUDY EXCLUSIVE Limited Edition)

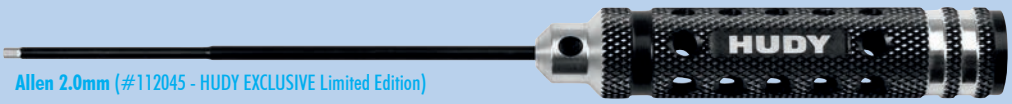

Allen 2.0mm (#112045 - HUDY EXCLUSIVE Limited Edition)

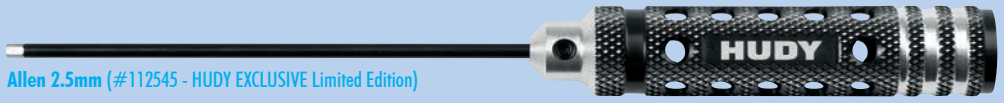

Allen 2.5mm (#112545 - HUDY EXCLUSIVE Limited Edition)

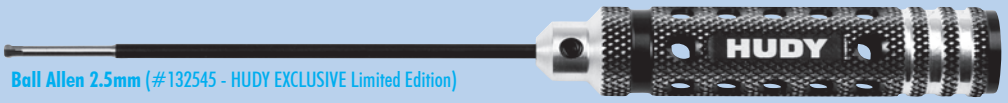

Ball Allen 2.5mm (#132545 - HUDY EXCLUSIVE Limited Edition)

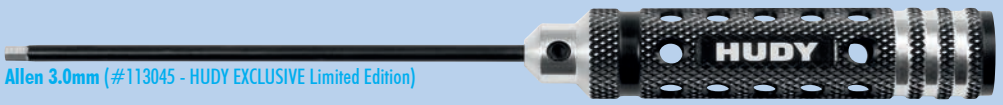

Allen 3.0mm (#113045 - HUDY EXCLUSIVE Limited Edition)



Socket 5.5mm (#175535 - HUDY EXCLUSIVE Limited Edition)



Socket 7.0mm (#177035 - HUDY EXCLUSIVE Limited Edition)



Reamer (#107602 - HUDY EXCLUSIVE Limited Edition)



Professional Multi Tool (HUDY #183011)



Scissors (HUDY #188990)



Alu Shock Pliers (#183070 HUDY ALU SHOCK PLIERS)



Blade Hobby Knife (HUDY#188980)

INCLUDED

350cSt (#106335)
HUDY Premium Silicone Oils



SILICONE OIL

5.000cSt (#106450)
HUDY Premium Silicone Oils



SILICONE OIL

(HUDY #106210)
Premium Graphite Grease



GRAPHITE GEASE

Mix thoroughly before use.

EQUIPMENT REQUIRED

Transmitter



Receiver



Speed Controller



Steering Servo



Electric Motor



Pinion Gear with Setscrew



LiPo Battery



Battery Charger



Lexan™ Paint



OPTION Wheels & Tires & Inserts (HUDY #803053 C3-28) (HUDY #803062 A1-36)



190mm Bodyshell



OPTION Double-sided Tape (HUDY #107875)



OPTION Fibre Tape (HUDY #107870)

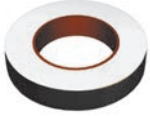

OPTION Bearing Oil (HUDY #106230)



OIL

Threadlock



CA glue



BUILD TIPS & NOTES



VIDEO TECH TIP

Alexander Hagberg (Factory Driver)

When a QR CODE is found in the instruction manual, scan the code to be directed to an online video that explains that feature or adjustment in more detail. Make sure to watch all of the instructional videos to get the most performance out of your car.

OPTION

SAMPLE OF OPTIONAL PARTS		
#30XXXX	TYPE1	OPTION 1
#30XXXX	TYPE2	OPTION 2
#30XXXX	TYPE	INCLUDED
#30XXXX	TYPE3	OPTION 3

XRAY offers wide range of optional tuning parts which are listed in a table like this. Please refer to the exploded view of each main section to verify which part is included in the kit while all other parts are available only as an optional part and must be purchased separately.

COLOR INDICATIONS

At the beginning of each section is an exploded view of the parts to be assembled. There is also a list of all the parts and part numbers that are related to the assembly of that section.

The part descriptions are color-coded to make it easier for you to identify the source of a part. Here are what the different colors mean:

304912 — **STYLE A** - indicates parts that are included in the bag marked for the section.

301025 — **STYLE B** - indicates parts that are included in the box.

304903 — **STYLE C** - indicates parts that are already assembled from previous steps.

302310 — **STYLE D** - indicates parts that are optional.

CHASSIS PREPARATION



VIDEO TECH TIP

CHASSIS PREPARATION

To protect and seal edges of carbon parts, sand edges smooth and then apply CA glue.
Do this for: chassis edges and countersunk holes.



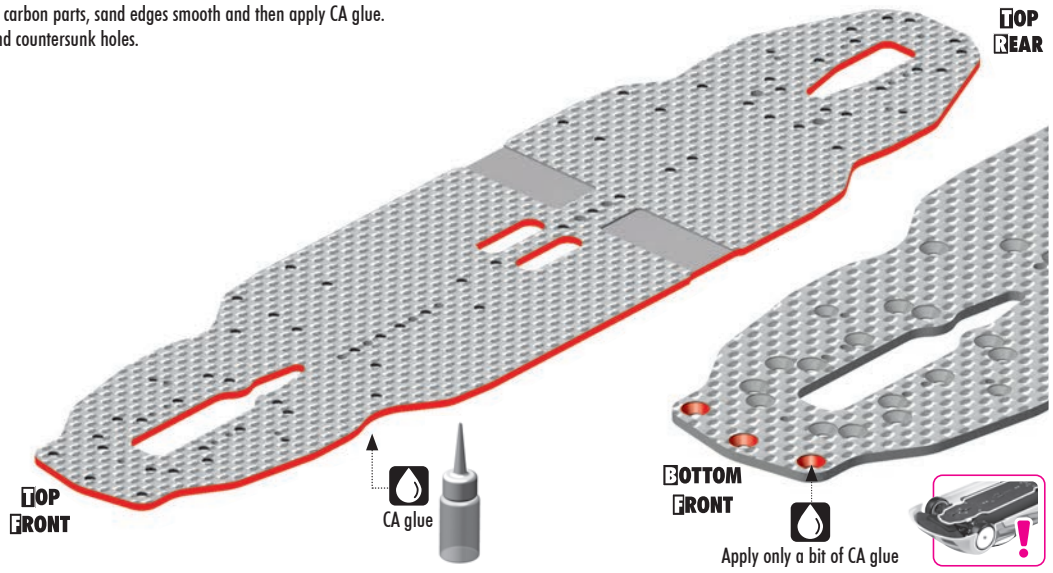

XRAY uses the highest quality USA-made carbon fiber sheets available on the market. The carbon fiber sheets are pressed, and this production technique may result in slight variations in each sheet's thickness and flatness. The carbon manufacturer cannot and does not guarantee perfect uniformity as it is impossible to ensure each plate's perfect flatness with such thin material thicknesses.

These tolerances for thickness and flatness are taken into consideration when designing our XRAY cars and parts. Minor irregularities in the carbon fiber parts will not affect the performance of XRAY vehicles once assembled with the other components. While an individual carbon fiber part itself may not lay perfectly flat, rest assured that the assembled vehicle will still perform as designed and intended.



All ball-bearings are factory pre-oiled. Regularly service, clean and lubricate all ball-bearings with HUDY Bearing Oil (#106230). Replace any bearings that develop a "gritty" feeling to prevent inefficiency and avoid rear axle bearing blowouts.

Make sure to use only original XRAY ball-bearings, which all have specific tolerances, axial and radial play, and are all individually selected. Using 3rd party ball-bearings may result in failures and damage to other parts.

1. GEAR DIFFERENTIAL & FRONT SOLID AXLE

OPTION #104002 or #104003
HUDY AIR VAC – VACUUM PUMP



OPTION #304932
GRAPHITE GEAR DIFF BEVEL & SATELLITE GEARS (2+4)



BAG 01.1 01.2

305122	ALU SOLID AXLE SHAFT - LIGHTWEIGHT - SWISS 7075 T6	304980	COMPOSITE GEAR DIFF CROSS PIN
305139	STEEL SOLID AXLE OUTDRIVE - HUDY SPRING STEEL™ (2)	304990	DIFF GASKET (4)
305168	COMPOSITE PULLEY 38T FOR ALU SOLID AXLE	901302	HEX SCREW SB M3x2.5 (10)
902305	HEX SCREW SH M3x5 (10)	903258	HEX SCREW SFH M2.5x8 (10)
908256	HEX SCREW SOCKET HEAD CAP M2.5x6 (10)	940611	BALL-BEARING 6x10x3 LOW RADIAL PLAY RUBBER SEALED - OIL (2)
940611	BALL-BEARING 6x10x3 LOW RADIAL PLAY RUBBER SEALED - OIL (2)	964031	WASHER S 3.5x10x0.2 (10)
962930	SERRATED LOCK WASHER 3x6x1 (10)	964050	WASHER S 5x15x0.3 (10)
		970070	O-RING 7x1 (10)
304903	X4 BB GEAR DIFFERENTIAL FOR UNI BULKHEADS - SET	971240	SILICONE O-RING 24x0.7 (10)
304912	X4 COMPOSITE GEAR DIFF. CASE 38T PULLEY & COVER FOR UNI BULKHEADS	972040	SILICONE O-RING 4x2 (10)
304930	COMPOSITE GEAR DIFF BEVEL & SATELLITE GEARS (2+4)	980157	PIN 1.5x7.3 (10)
304960	STEEL ADAPTER FOR GEAR DIFF OUTDRIVE (2)	981210	PIN 2x10 (10)
304974	STEEL GEAR DIFF OUTDRIVE FOR SMALL BEARING - HUDY SPRING STEEL™ (2)		

Numbers in parentheses ( ) refer to quantities when purchased separately.

01.2 GEAR DIFFERENTIAL

2x 901302 SB M3x2.5

2x 981210 P 2x10

BAG 01.2

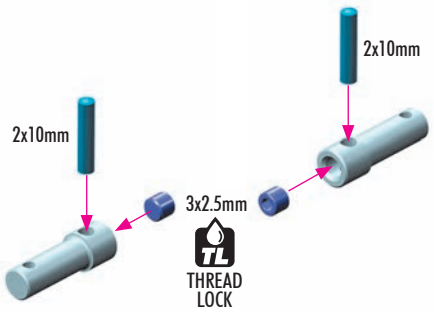

ASSEMBLED VIEW

Make sure the pin is centered in the adapter after assembly.

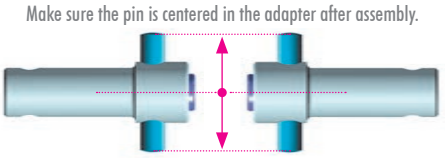

CENTERED

1. GEAR DIFFERENTIAL & FRONT SOLID AXLE

2x 964050 S 5x15x0.3

2x 972040 O 4x2

2x 940611 BB 6x10x3

2x 980157 P 1.5x7

2x 970070 O 7x1

Carefully remove the gears from the frame, and remove all excess plastic flash.



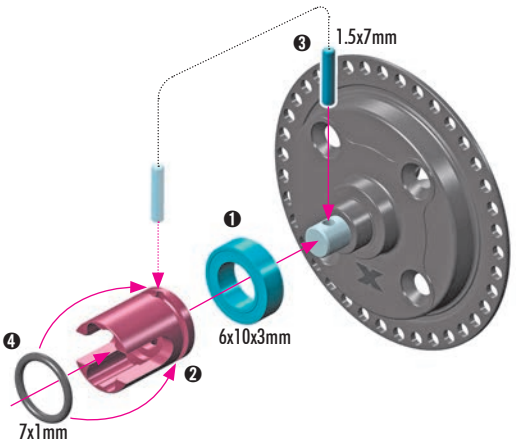

Confirm the bevel gear is fully seated onto the adapter pin.

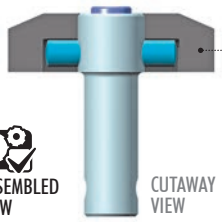

ASSEMBLED VIEW

CUTAWAY VIEW

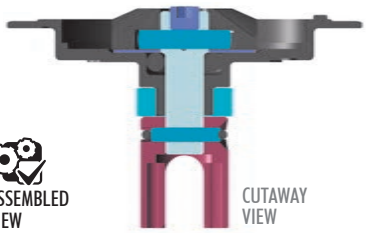

ASSEMBLED VIEW

CUTAWAY VIEW

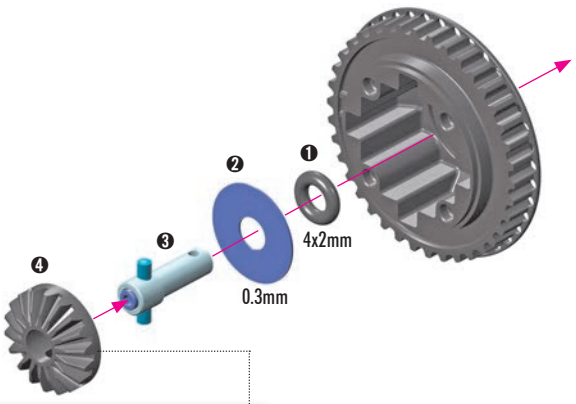

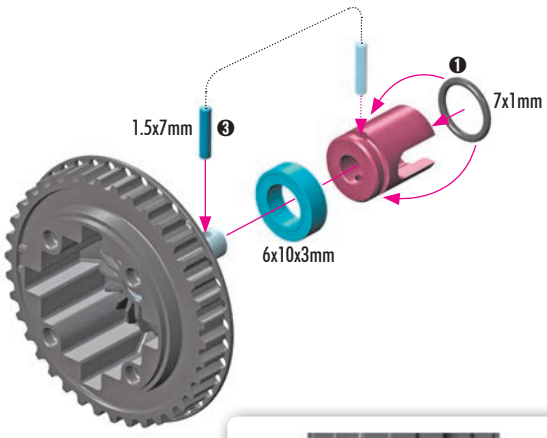

It is important that gear diff bevel sits fully into the pin.

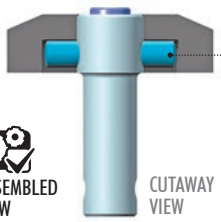

ASSEMBLED VIEW

CUTAWAY VIEW

OPTION #304932 GRAPHITE GEAR DIFF BEVEL & SATELLITE GEARS (2+4)



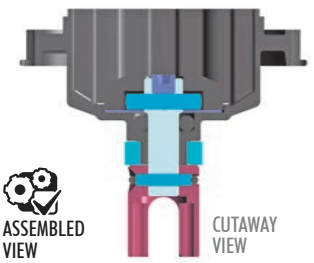

ASSEMBLED VIEW

CUTAWAY VIEW

4x 964031 S 3.5x10x0.2

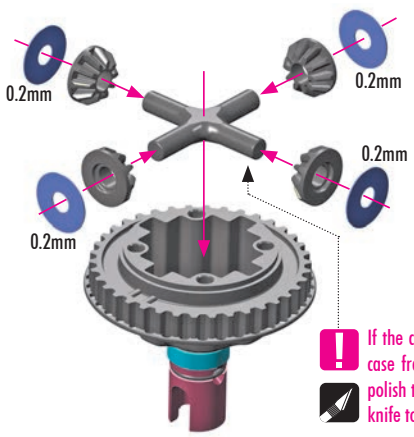

If the cross pin does not slide into the diff case freely, use fine sand paper to lighly polish the ends of the cross, or use a hobby knife to carefully remove any flashing.

OPTION #304932 GRAPHITE GEAR DIFF BEVEL & SATELLITE GEARS (2+4)



1. GEAR DIFFERENTIAL & FRONT SOLID AXLE

INITIAL SETTING
5.000cSt

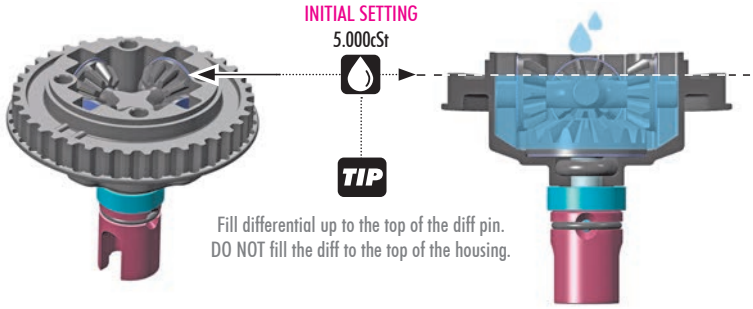

TIP
Fill differential up to the top of the diff pin.
DO NOT fill the diff to the top of the housing.

TIP TO ENSURE YOU HAVE THE SAME AMOUNT OF OIL FROM REBUILD TO REBUILD, DO THE FOLLOWING:



OPTION #107865
HUDY Ultimate Digital Pocket Scale 300g±0.01g

OIL

11.65g + 1.5g = 13.15g



❶ Put the diff (without oil) on the scale and check the weight (approximately 11.65g).

❷ Slowly pour oil into the diff and watch the weight. Add 1.5g of oil into the diff. The approximate weight of the diff including oil is 13.15g.

TIP TIPS FOR DIFFERENTIALS TIP

LOW TRACTION		MEDIUM TRACTION		HIGH TRACTION		VERY-HIGH TRACTION	
1.000cSt	(HUDY #106410)	5.000cSt	(HUDY #106450)	8.000cSt	(HUDY #106480)	11.000cSt	(HUDY #106492)
2.000cSt	(HUDY #106420)	6.000cSt	(HUDY #106460)	9.000cSt	(HUDY #106490)	12.000cSt	(HUDY #106512)
3.000cSt	(HUDY #106430)	7.000cSt	(HUDY #106470)	10.000cSt	(HUDY #106510)	15.000cSt	(HUDY #106515)
4.000cSt	(HUDY #106440)					17.000cSt	(HUDY #106517)
						20.000cSt	(HUDY #106520)

LIGHTER oil increases rear traction, HEAVIER oil increases on-power steering and stability. It is important NOT to use lighter oils in high-traction conditions as this would NOT increase traction, but would make the car loose as the car would become too twitchy.

However, if the oil is too light, it could generate the same effect like the car has no traction. Therefore it is very important to choose the correct oil very carefully. We recommend using lighter oil first, then try heavier oil to better understand the effect on the car's behavior at the track. Choose the oil accordingly.



VIDEO TECH TIP

REAR DIFFERENTIAL

OPTION #104002 or #104003
HUDY AIR VAC – VACUUM PUMP



TIP To make sure that all the air is removed from the diff oil, we recommend using the HUDY Air Vac.

TIP TIPS FOR FRONT DIFFERENTIAL

To increase off-power steering and mid-corner steering, the gear diff can also be used in front.

USE THESE OILS FOR FRONT DIFFERENTIAL

500.000cSt	(HUDY #106650)
1 000.000cSt	(HUDY #106692)
2 000.000cSt	(HUDY #106694)

To make the front differential thicker, you can use cleaning gum instead of oil.

IMPORTANT!
Using cleaning gum instead of oil in the gear differential can lead to gear breakage because the gears are working under dry conditions.

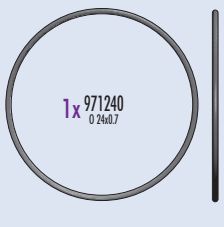

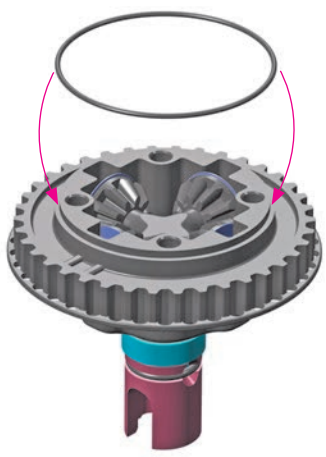

After disassembling the gear diff, the large O-ring may have an increased size and may be more difficult to re-install. We recommend either inserting the old O-ring carefully in the diff cover, or installing a new O-ring if the old one cannot be made to fit properly.

1. GEAR DIFFERENTIAL & FRONT SOLID AXLE

4x 903258 SFH M2.5x8

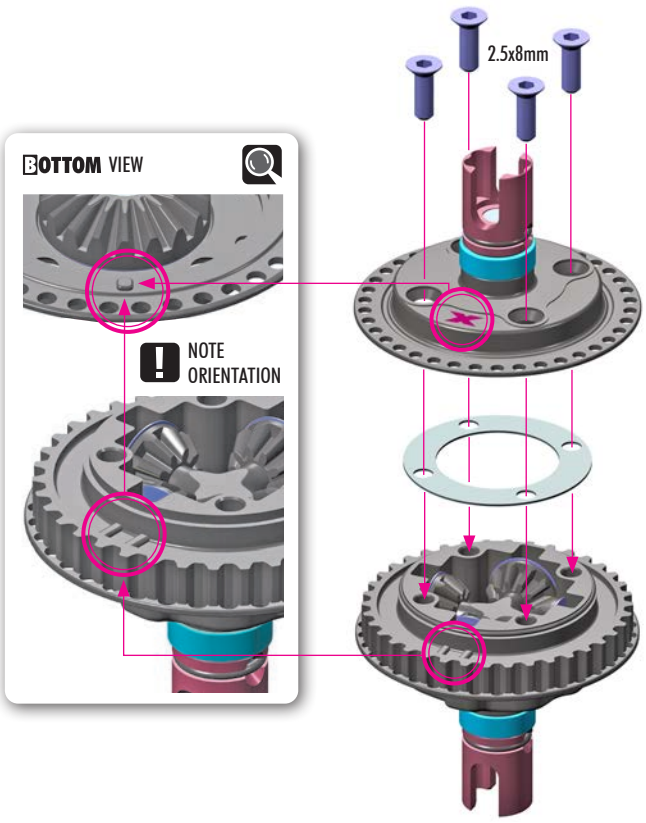

Tighten the screws equally but DO NOT tighten them completely.

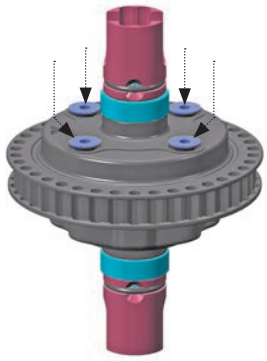

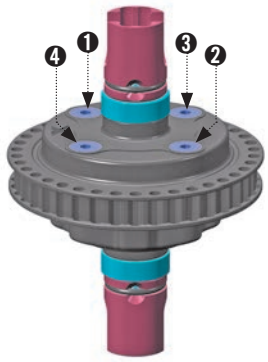

Finish tightening in this order.

01.1 FRONT SOLID AXLE

3x 902305 SH M3x5

2x 940611 BB 6x10x3

BAG 01.1

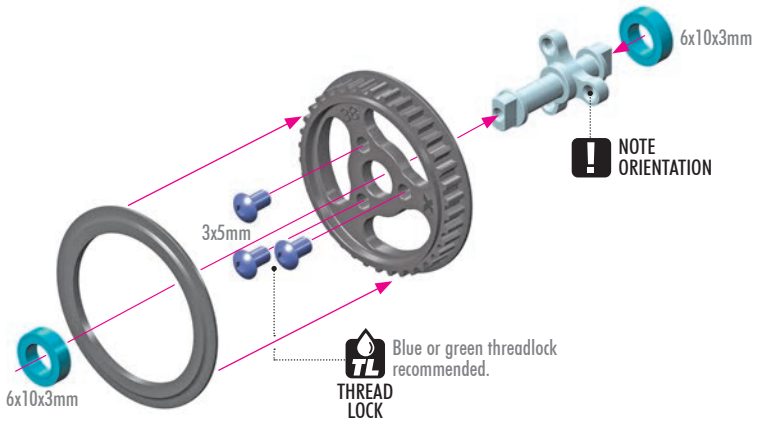

2x 962930 WASHER 3x6x1

2x 908256 SCH M2.5x6

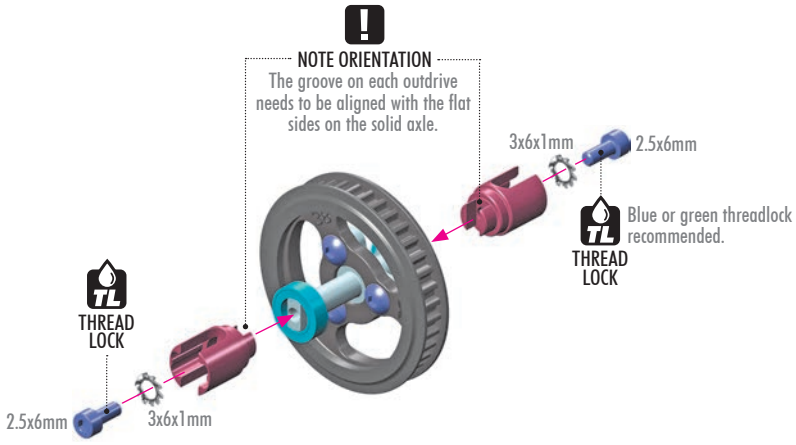

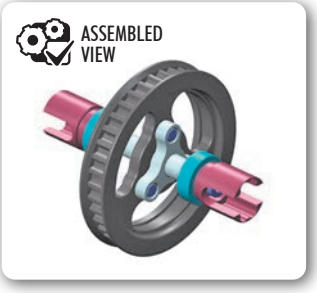

2. FRONT & REAR SUSPENSION



! 1.5mm alu chassis requires special 110° countersink M3x5mm screws and shims. Included in #300044 X4 kit.



VIDEO TECH TIP

CHASSIS OPTIONS

OPTION

X4 CFF2™ FRONT LOWER ARM				
#302187-M	LEFT	MEDIUM		INCLUDED
#302186-M	RIGHT	MEDIUM		INCLUDED
#302187-H	LEFT	HARD		OPTION
#302186-H	RIGHT	HARD		OPTION
#302185-M	LEFT	MEDIUM	SHORT	OPTION
#302184-M	RIGHT	MEDIUM	SHORT	OPTION

X4 CFF2™ REAR LOWER ARM				
#303187-M	LEFT	MEDIUM		INCLUDED
#303186-M	RIGHT	MEDIUM		INCLUDED
#303187-H	LEFT	HARD		OPTION
#303186-H	RIGHT	HARD		OPTION
#303185-M	LEFT	MEDIUM	SHORT	OPTION
#303184-M	RIGHT	MEDIUM	SHORT	OPTION





OPTION #302121
FRONT ROLL-CENTER SPACER (2)

OPTION #302122
REAR ROLL-CENTER SPACER (2)



OPTION #302123
X4 FRONT ROLL-CENTER CARBON SPACER 1+2mm (1+1)



OPTION #302124
X4 REAR ROLL-CENTER CARBON SPACER 1+2mm (1+1)



BAG 02

302102	X4 ALU STAND SUSPENSION ARM UPSTOP - SWISS 7075 T6 (2)
302103	X4 CARBON PLATE SUSPENSION ARM UPSTOP (2)
302186-M	X4 CFF2™ FRONT LOWER ARM - MEDIUM - RIGHT
302187-M	X4 CFF2™ FRONT LOWER ARM - MEDIUM - LEFT
302434	ANTI-ROLL BAR STEEL BALL END 3.8mm WITH M2.5x4mm THREAD (2)
303119-K	ALU SHIM 3x9x2.0mm - BLACK (10)
303186-M	X4 CFF2™ REAR LOWER ARM - MEDIUM - RIGHT
303187-M	X4 CFF2™ REAR LOWER ARM - MEDIUM - LEFT
303251	X4 LOWER ARM BALL UNIVERSAL 4.9mm WITH HEX - HUDY SPRING STEEL™ (2)
303262	X4 PIVOT BALL 4.9mm WITH M3x5.5mm THREAD - HUDY SPRING STEEL™ (2)
303263	X4 PIVOT BALL 4.9mm WITH M3x6.5mm THREAD - HUDY SPRING STEEL™ (2)
376291	COMPOSITE M3 SNAP LOCK BUSHING (8)
901306	HEX SCREW SB M3x6 (10)
901308	HEX SCREW SB M3x8 (10)
901310	HEX SCREW SB M3x10 (10)
902255	HEX SCREW SH M2.5x5 (10)
903255	HEX SCREW SFH M2.5x5 (10)
903308	HEX SCREW SFH M3x8 (10)
301025	X4 CARBON CHASSIS 2.2mm
301026	X4 ALU FLEX CHASSIS 2.0mm - SWISS 7075 T6
301027	X4 ALU FLEX CHASSIS 1.5mm - SWISS 7075 T6
303119-C	ALU SHIM 3x9x2.0mm - DEEPER COUNTERSUNK (10) *only in #300044 Kit.

Numbers in parentheses ( ) refer to quantities when purchased separately.

REAR SUSPENSION ARMS

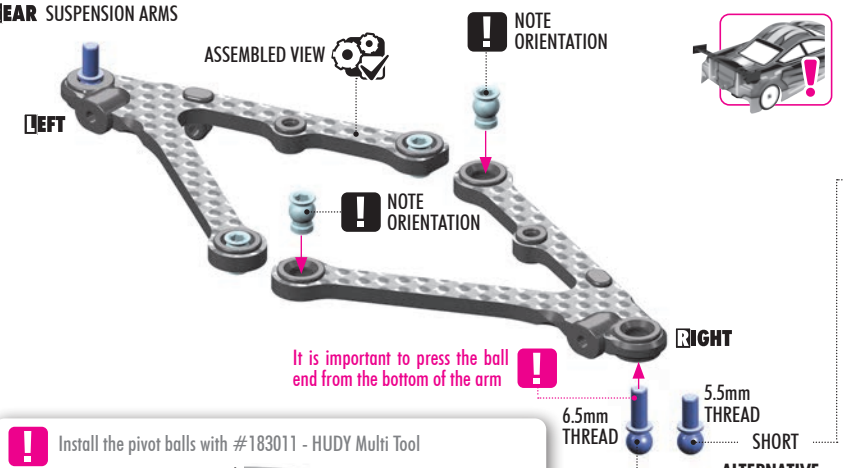

Follow page 31/ step 1

Pivot ball with M3x5.5mm

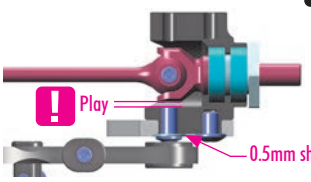

Pivot ball with M3x6.5mm

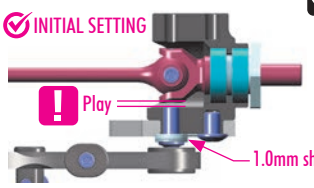

When using more than 1mm shim under the hub, use the #303263 pivot ball with longer 6.5mm thread length to increase durability in serious crashes.

Make sure to check for clearance between the pivot ball threads and CVD pin.

Install the pivot balls with #183011 - HUDY Multi Tool

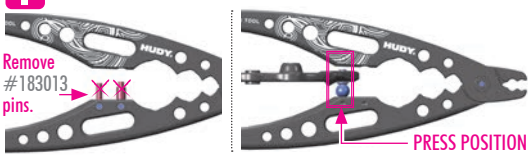

To make sure that the pivot ball is pressed into the arm correctly, remove the pins from the HUDY Multi Tool and use the exact press position like shown on the picture. This way the ball will never go through the arm and will NOT create any excessive play.



2x 901308 SB M3x8

2x 901310 SB M3x10



VIDEO TECH TIP

LOWER ARMS

REAR SUSPENSION ARMS

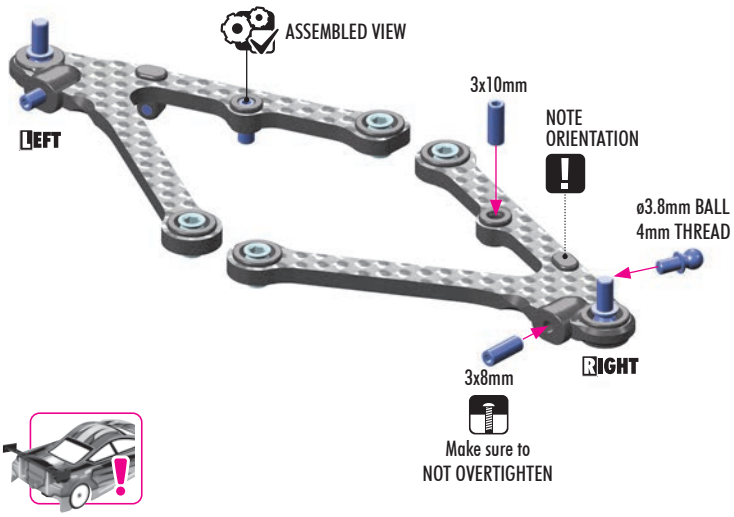

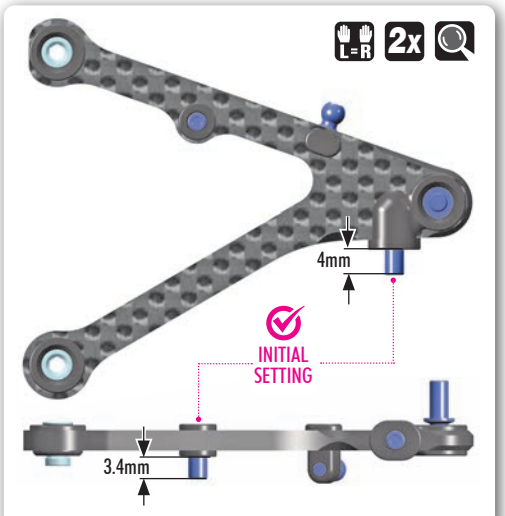

FRONT SUSPENSION ARMS

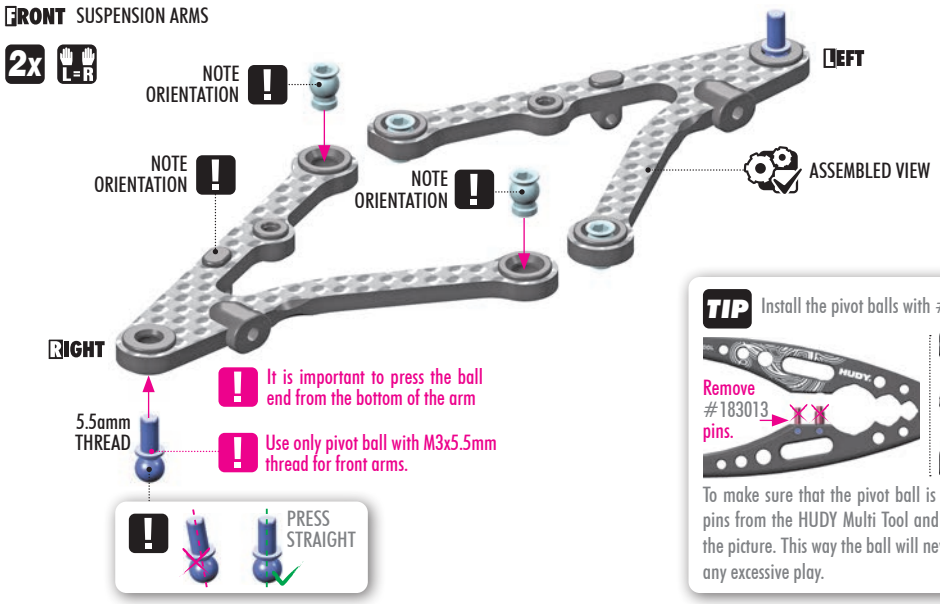

TIP Install the pivot balls with #183011 - HUDY Multi Tool.

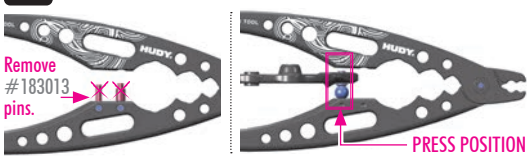

To make sure that the pivot ball is pressed into the arm correctly, remove the pins from the HUDY Multi Tool and use the exact press position like shown on the picture. This way the ball will never go through the arm and will NOT create any excessive play.

2. FRONT & REAR SUSPENSION

2x 901308 SB M3x8

2x 901310 SB M3x10

FRONT SUSPENSION ARMS

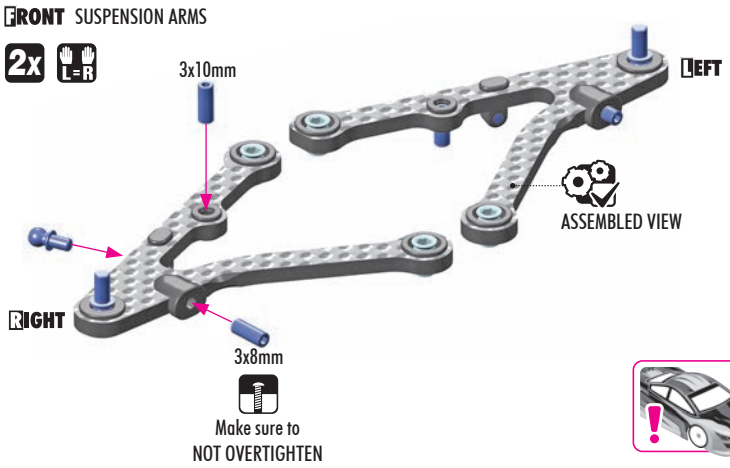

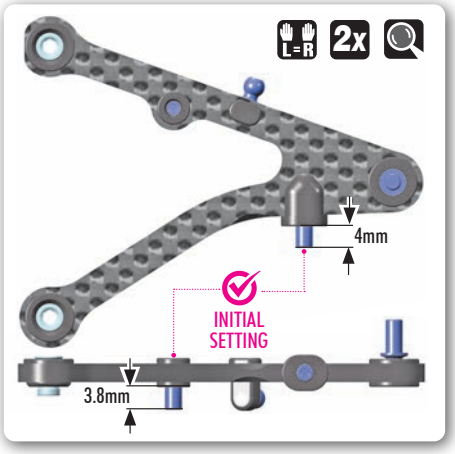

8x 303119-K SHIM 3x9x2

8x 303119-C SHIM 3x9x2 (included in 1.5mm chassis kit)

8x 903308 SFH M3x8

1.5mm Chassis Note: When installing the special 303119-C, make sure shim has the correct orientation. The larger chamfer should face the chassis plate to allow the screw to be fully tightened.

OPTION #303118-C ALU SHIM 3x9x1.0mm - DEEPER COUNTERSUNK (10)

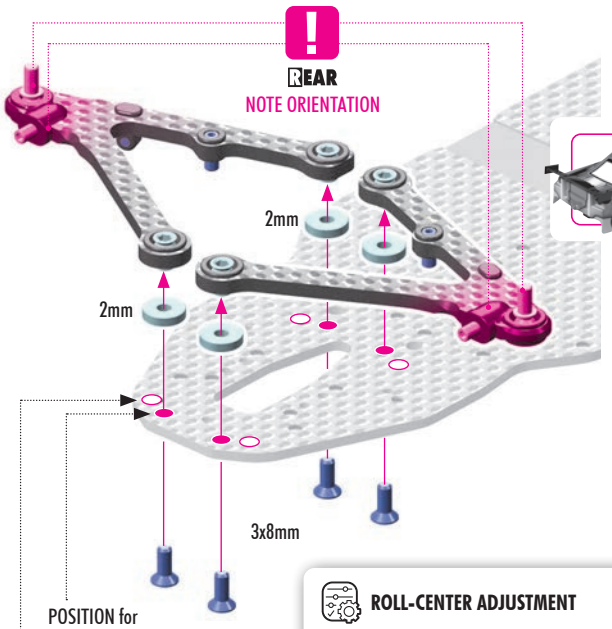

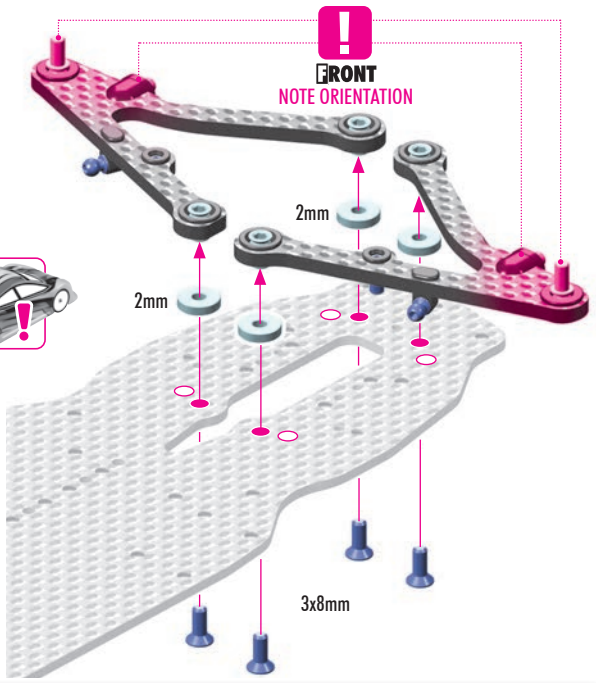

POSITION for STANDARD SUSPENSION ARMS

POSITION for SHORT SUSPENSION ARMS (NOT INCLUDED)



VIDEO TECH TIP

ROLL-CENTER

CHASSIS ALTERNATIVES

ROLL-CENTER ADJUSTMENT

RAISING THE LOWER ARMS will raise the car's roll center. Raising the lower arms both front and rear will free up the car, and will make it initially more responsive. Side bite will be decreased. A higher roll center is typically recommended for asphalt racing.

LOWERING THE LOWER ARMS will lower the car's roll center. Lowering both the front and rear arms will lock in the car more, and will make it initially less responsive. Side bite will be increased. A lower roll center is typically recommended for carpet racing.

OPTION #302121 FRONT ROLL-CENTER SPACER (2)



OPTION #302122 REAR ROLL-CENTER SPACER (2)



OPTION #302123 X4 FRONT ROLL-CENTER CARBON SPACER 1+2mm (1+1)



OPTION #302124 X4 REAR ROLL-CENTER CARBON SPACER 1+2mm (1+1)



To reinforce the chassis and protect against damage in serious crashes, we recommend using these roll-center spacers to prevent screws from pulling through the chassis plate. The spacers provide additional protection compared to standard shims but also reduce chassis flex.

OPTION

X4 CFF2™ REAR LOWER ARM				
#303187-M	LEFT	MEDIUM		INCLUDED
#303186-M	RIGHT	MEDIUM		INCLUDED
#303187-H	LEFT	HARD		OPTION
#303186-H	RIGHT	HARD		OPTION
#303185-M	LEFT	MEDIUM	SHORT	OPTION
#303184-M	RIGHT	MEDIUM	SHORT	OPTION



OPTION

X4 CFF2™ FRONT LOWER ARM				
#302187-M	LEFT	MEDIUM		INCLUDED
#302186-M	RIGHT	MEDIUM		INCLUDED
#302187-H	LEFT	HARD		OPTION
#302186-H	RIGHT	HARD		OPTION
#302185-M	LEFT	MEDIUM	SHORT	OPTION
#302184-M	RIGHT	MEDIUM	SHORT	OPTION



STANDARD: The standard length arms provide neutral and balanced handling with moderate initial steering and good cornering speed.

SHORT: Short arms are more aggressive, allowing more chassis roll and increasing initial steering. Short arms will improve steering in low traction and tight technical tracks, but will be more difficult to drive.

MEDIUM: Maximum mechanical grip, recommended for low to medium traction surfaces.

HARD: Reduced mechanical grip creates more rotation on very-high traction surfaces like ETS carpet and indoor asphalt.

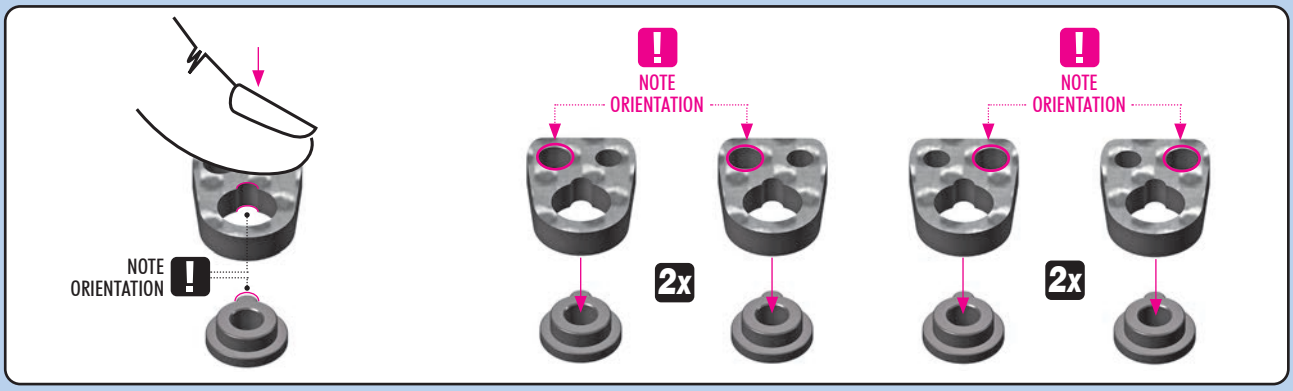

4x 901306 SB M3x6

4x 902255 SH M2.5x5

4x 903255 SH M2.5x5

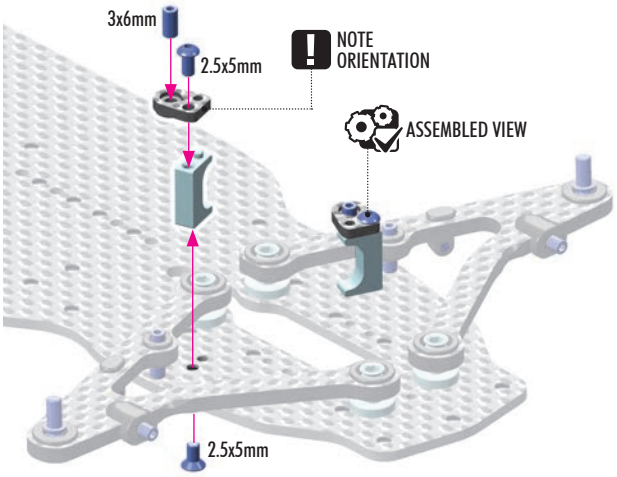

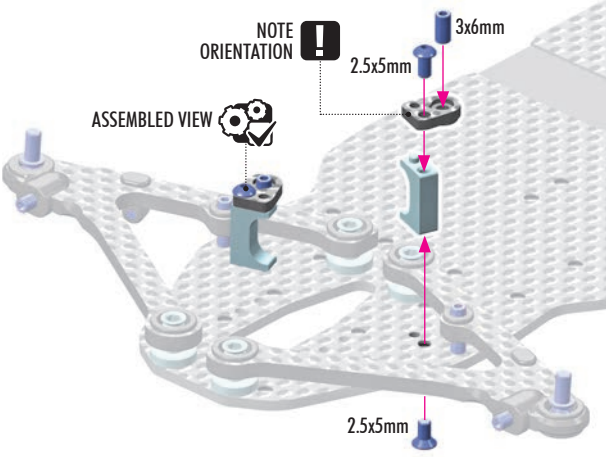







VIDEO TECH TIP

UPSTOPS THEORY

UPSTOPS

For the most precise and comfortable upstop adjustment, we recommend using the

OPTION #107730
HUDY Droop & Upstop Set-Up Tool.

Please refer to page 57 for detailed instructions on how to set the upstop with this tool.

IMPORTANT:
Other upstop tools on the market may use different wheel diameters, which can result in varying measurements. To ensure accuracy and consistency, we recommend the #107730 - the same tool trusted & used by all XRAY team drivers. When setting the upstop, make sure to remove the shocks.



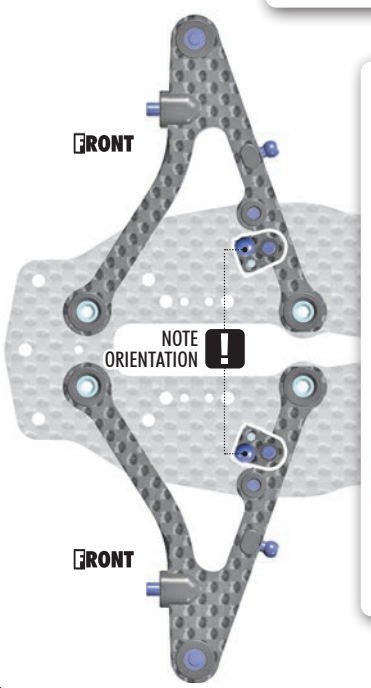

UPTRAVEL SETTING FRONT & REAR

UPTRAVEL DEACTIVE

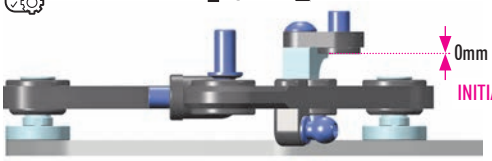

0mm Up-stop Setting - allows for maximum upward suspension travel. Recommended starting point for most conditions.

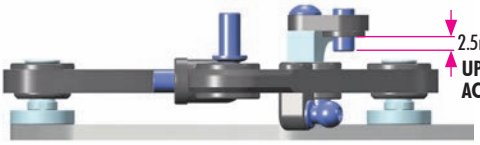

Up-stop In Use - Uptravel is limited in front, rear (or both) to reduce grip at that end of the car, which can improve cornering speed and reduce traction rolling, making the car easier to control.

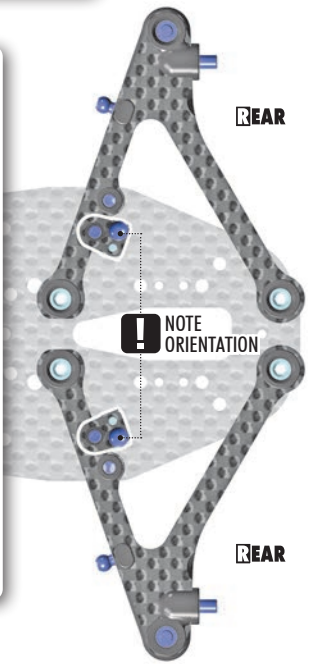

3. CENTRAL TRANSMISSION

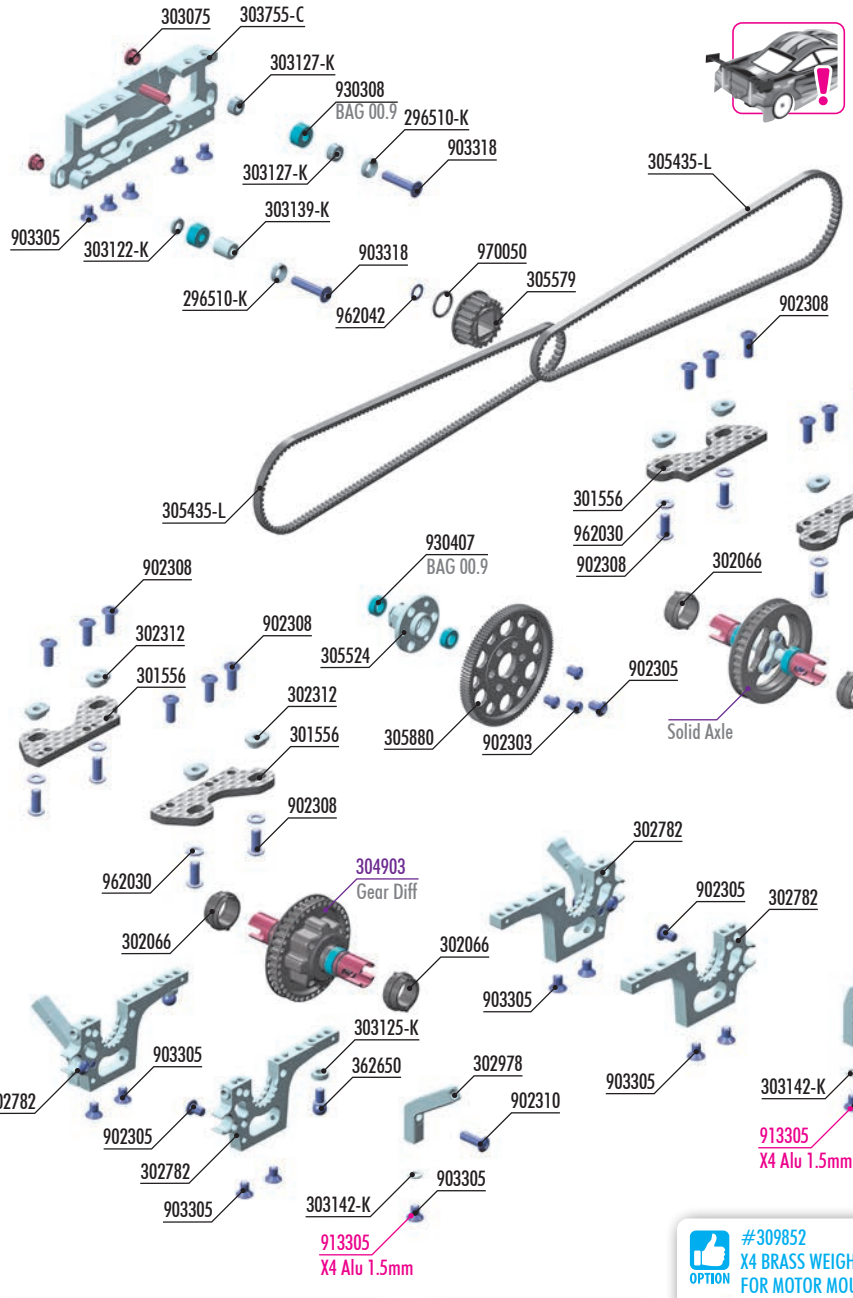

OPTION

ALU CASTER BUSHINGS			
#302310	FRONT 3° / REAR 5.5°	1 Dot	OPTION
#302311	FRONT 4° / REAR 4.5°	2 Dots	INCLUDED
#302312	FRONT 5° / REAR 3.5°	3 Dots	INCLUDED



OPTION #305435
HIGH-PERFORMANCE DRIVE BELT 3x351mm

OPTION #305436
HIGH-PERFORMANCE DRIVE BELT LOW-FRICTION 3x351mm



OPTION #303768
ALU CHASSIS T-BRACE - 7075 T6



OPTION #303767
BRASS CHASSIS T- BRACE - 10g



OPTION



SPUR GEARS 48P		
#305772	72T / 48P	OPTION
#305776	76T / 48P	OPTION
#305778	78T / 48P	OPTION
#305779	79T / 48P	OPTION
#305781	81T / 48P	OPTION
#305784	84T / 48P	OPTION
#305784-O	84T / 48P	OPTION

OPTION



OFFSET SPUR GEARS 64P		
#305860	90T / 64P	OPTION
#305862	92T / 64P	OPTION
#305866	96T / 64P	OPTION
#305866-O	96T / 64P	OPTION
#305869	99T / 64P	OPTION
#305870	100T / 64P	OPTION
#305870-O	100T / 64P	OPTION
#305874	104T / 64P	OPTION
#305876	106T / 64P	OPTION
#305878	108T / 64P	OPTION
#305880	110T / 64P	INCLUDED
#305880-O	110T / 64P	OPTION
#305882	112T / 64P	OPTION
#305884	114T / 64P	OPTION

OPTION #301557
X4 UNIVERSAL CARBON UPPER CLAMP -1mm (2)



OPTION #302067-K
ALU ADJUSTMENT BALL-BEARING HUB (2)



OPTION #309852
X4 BRASS WEIGHTS NICKEL COATED FOR MOTOR MOUNT 4g+4g+8g

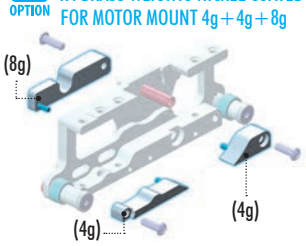

BAG 03

296510-K	ALU COUNTERSUNK SHIM - BLACK (10)
301556	X4 UNIVERSAL CARBON REAR UPPER CLAMP FOR UNI BULKHEADS (2)
301976	X4 ALU SHOCK HOLDER FRONT FIXED FOR UNI BULKHEADS (2)
302066	X4 COMPOSITE ADJUSTMENT BALL-BEARING HUB FOR UNI BULKHEADS (4)
302311	X4 ALU CASTER BUSHING FRONT 4° / REAR 1.5° - 2 DOTS (4)
302312	X4 ALU CASTER BUSHING FRONT 5° / REAR 2.5°/3.5° - 3 DOTS (4)
302782	X4 ALU LOWER UNI BULKHEAD - UNIVERSAL - SWISS 7075 T6
302978	X4 ALU SHOCK HOLDER REAR FIXED FOR UNI BULKHEADS (2)
303075	STEEL NUT (2)
303122-K	ALU SHIM 3x6x1.0mm - BLACK (10)
303125-K	ALU SHIM 3x6x3.0mm - BLACK (10)
303127-K	ALU SHIM 3x6x4.0mm - BLACK (10)
303139-K	ALU SHIM 3x6x7.0mm - BLACK (10)
303142-K	ALU SHIM 3x5x0.5mm - BLACK (10)
303755-C	X4 ALU MOTOR MOUNT WITH 3mm CENTER. PINS - DEEPER COUNTERSUNK
305435-L	HIGH-PERFORMANCE DRIVE BELT 3x351mm
305524	X4 ALU SOLID LAYSHAFT & BEARINGS
305579	X4 COMPOSITE PULLEY FOR LAYSHAFT 20T
305880	OFFSET SPUR GEAR 110T / 64
362650	BALL END 4.9mm WITH THREAD 6mm (2)
902303	HEX SCREW SH M3x4 SMALL HEAD - STAINLESS (10)
902305	HEX SCREW SH M3x5 (10)
902308	HEX SCREW SH M3x8 (10)
902310	HEX SCREW SH M3x10 (10)
903305	HEX SCREW SFH M3x5 (10)
903318	HEX SCREW SFH M3x18 (10)
930308	BALL-BEARING 3x8x4 STEEL SEALED - OIL (2)
930407	BALL-BEARING 4x7x2.5 STEEL SEALED - OIL (2)
962030	WASHER S 3x6x0.3 (10)
962042	WASHER S 4x6x0.1 (10)
970050	O-RING 5x1 (10)
304903	X4 BB GEAR DIFFERENTIAL FOR UNI BULKHEADS - SET
913305	HEX SCREW 110° SFH M3x5 - HUDY SPRING STEEL™ (4) *only in #300044 kit.

Numbers in parentheses ( ) refer to quantities when purchased separately.

2x 303125-K SHIM 3x6x3

4x 902305 SH M3x5

8x 903305 SFH M3x5



VIDEO TECH TIP

BUILDING THE BULKHEADS



OPTION #990006
HUDY TITANIUM BALL STUD
D=4.9 / L=6 / S=3.5 /2mm HEX (2)



OPTION #302067-K
ALU ADJUSTMENT
BALL-BEARING HUB (2)



NOTE ORIENTATION
Please see page 17 / step 1 for
INITIAL SETTING

FRONT
SOLID AXLE

OPTION #305435
HIGH-PERFORMANCE DRIVE BELT 3x351mm

OPTION #305436
HIGH-PERFORMANCE DRIVE BELT LOW-FRICTION 3x351mm

Low-friction belt is very thin and elastic as possible for an extremely effective transmission that dramatically reduces friction and increases performance.

3. CENTRAL TRANSMISSION

8x 902308 SH M3x8

8x 962030 S 3x6x0.3



VIDEO TECH TIP

CASTER

NOTE ORIENTATION FOR ALL PARTS

ASSEMBLED VIEW

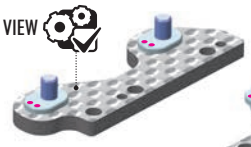

ASSEMBLED VIEW

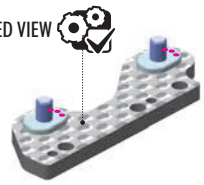



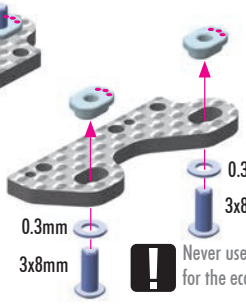

Never use alu or titanium screws for the eccentric bushings.

All 4 bushings at one end of the car must be installed in the same orientation.

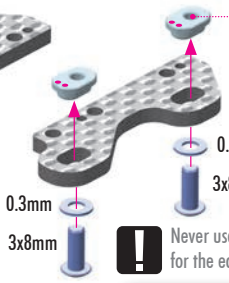

Never use alu or titanium screws for the eccentric bushings.

OPTION

ALU CASTER BUSHINGS			
#302310	FRONT 3° / REAR 5.5°	1 Dot	OPTION
#302311	FRONT 4° / REAR 4.5°	2 Dots	INCLUDED
#302312	FRONT 5° / REAR 3.5°	3 Dots	INCLUDED

CASTER ADJUSTMENT

For most conditions, start with 4.0° front caster. Increasing front caster will increase steering (mainly on-power) but may also become more difficult to drive and more likely to traction roll.

The standard starting point for rear caster is 2.5°. More rear caster will increase initial steering but make the car more nervous to drive. It can increase rear traction in lower traction conditions. Less rear caster helps to increase cornering speed and rotation.

IMPORTANT

All 4 bushings at one end of the car must be installed in the same orientation.



- 1 Dot = 0.5° Caster
- 2 Dots = 1.5° Caster
- 3 Dots = 2.5° Caster — INITIAL SETTING

- 1 Dot = 5.5° Caster
- 2 Dots = 4.5° Caster
- 3 Dots = 3.5° Caster

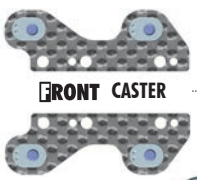

- 1 Dot = 3.0° Caster
- 2 Dots = 4.0° Caster — INITIAL SETTING
- 3 Dots = 5.0° Caster

12x 902308 SH M3x8



VIDEO TECH TIP

UPPER CLAMP FLEX OPTIONS



ASSEMBLED VIEW



ASSEMBLED VIEW

UPPER CLAMP FLEX ADJUSTMENT - 4 DIFFERENT COMBINATIONS

All-new upper clamp mounting alternatives for different flex and handling characteristics. The clamps feature 3 screws which can be used in different combinations.

1



All 3 screws mounted (front and rear)

INITIAL SETTING

Provides most neutral and forgiving handling. Recommended for most conditions, including high traction.

2



2 most forward screws mounted (in the front)
2 most rearward (in the rear)

Creates the most steering; ideal when maximum mid-corner steering is required. Car is more aggressive and more difficult to driver compared to Setting ❶.

3



2 most rearward screws mounted (in the front)
2 most forward (in the rear)

Gives similar handling feel as Setting ❷.

4



First and the 3rd screw mounted (front and rear)

Handling when removing the center screw is between Setting ❶ and ❷❸. The additional flex increases mechanical grip. The car will feel more "in the track", but maximum cornering speed is reduced compared to Setting ❶.

OPTION #301557 X4 UNIVERSAL CARBON UPPER CLAMP -1mm (2)



The optional upper clamps move the inner pivot 1.0mm closer to the centerline. This position will lengthen the upper arms and reduce camber gain to free up the car. Mid-corner steering improves in long sweepers, and traction rolling is reduced in very high traction conditions. Recommended for large open layouts or high traction surfaces.

BELT TENSION ADJUSTMENT & DIFFERENTIAL POSITION

REAR diff **UPPER** position - tab with DOT in bottom notch.
- provides **more on-power steering,** but makes the rear **less stable**.

Recommended for **medium-high traction** tracks.

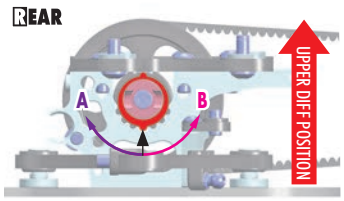

INITIAL POSITION **for ASPHALT**

REAR diff **LOWER** position - tab with DOT in top notch.
- provides **more rear traction** (mainly on-power), makes the car **more stable in chicanes**, but can **cause a push on corner exit.**

Recommended for **low-medium** traction tracks.

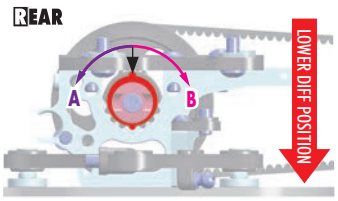

INITIAL POSITION **for CARPET**

TO LOOSEN REAR BELT:
Rotate both rear nylon hubs in arrow direction **A**

TO TIGHTEN REAR BELT:
Rotate both rear nylon hubs in arrow direction **B**



VIDEO TECH TIP

DIFF HEIGHT

BELT TENSION ADJUSTMENT

BELT TENSION ADJUSTMENT & DIFFERENTIAL POSITION

FRONT solid axle **UPPER** position - tab with DOT in bottom notch.
- provides **more steering**, but **less forward traction.**

Recommended for **medium-high** traction tracks and technical tracks.

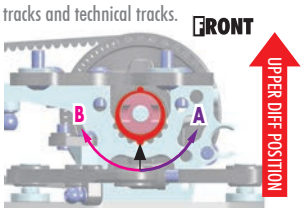

INITIAL POSITION **for ASPHALT**

FRONT solid axle **LOWER** position - tab with DOT in top notch.
- provides **more forward traction,** but makes the car **push on-power.**

Recommended for **low-traction** tracks.

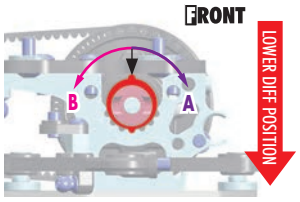

INITIAL POSITION **for CARPET**

TO LOOSEN FRONT BELT:
Rotate both front nylon hubs in arrow direction **A**

TO TIGHTEN FRONT BELT:
Rotate both front nylon hubs in arrow direction **B**

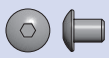
3x 902303 SH M3x4


2x 930407 BB 4x7x2.5


1x 970050 O 5x1


1x 966081 CH-CLIP 8

1

Apply a small amount of HUDY Graphite Grease in between the pulley and the layshaft to eliminate "clicking noise" if appears, and for an increased life of the parts.

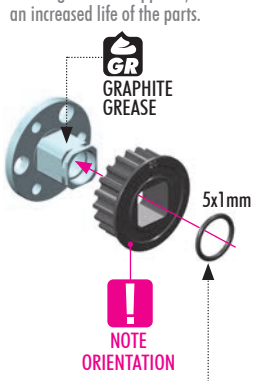

#966081
CH-CLIP 8 (10)
INCLUDED IN THE LAST AID BAG

Another alternative to secure the pulley on the layshaft is to use the CH-clip which is included in the "Last Aid" Bag. To mount the clip on the layshaft, you have to use special Snap Ring Pliers.



OPTION
Snap Ring Pliers (HUDY #189040)

2 ALTERNATIVE 64P OFFSET SPUR GEAR

INITIAL SETTING

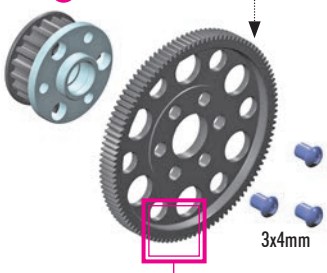

NOTE ORIENTATION



OPTION	OFFSET SPUR GEARS 64P		
	#305860	90T	OPTION
	#305862	92T	OPTION
	#305866	96T	OPTION
	#305866-O	96T	OPTION
	#305869	99T	OPTION
	#305870	100T	OPTION
	#305870-O	100T	OPTION
	#305874	104T	OPTION
	#305876	106T	OPTION
	#305878	108T	OPTION
	#305880	110T	INCLUDED
	#305880-O	110T	OPTION
	#305882	112T	OPTION
	#305884	114T	OPTION

2 ALTERNATIVE 48P SPUR GEAR

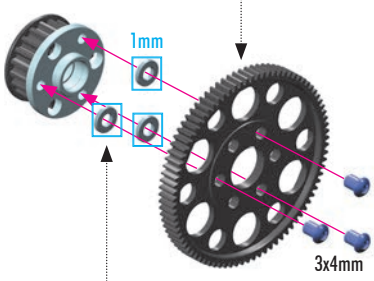

When using XRAY **48P** spur gears or aftermarket spur gears without an offset, use the **3x5x1mm** shims **(#303141 NOT included)** between the gear and layshaft to create the necessary clearance from the top deck.

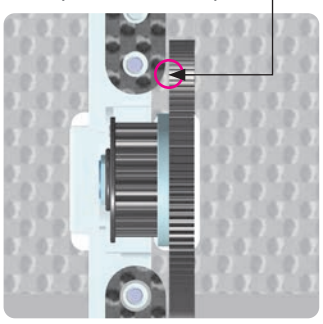

OPTION	SPUR GEARS 48P		
	#305772	72T	OPTION
	#305776	76T	OPTION
	#305778	78T	OPTION
	#305779	79T	OPTION
	#305781	81T	OPTION
	#305784	84T	OPTION
	#305784-O	84T	OPTION

3

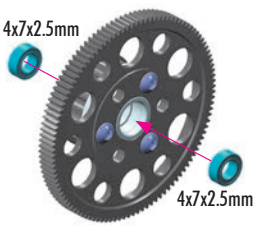

3. CENTRAL TRANSMISSION

1x 303122-K SHIM 3x6x1

2x 303127-K SHIM 3x6x4

1x 303139-K SHIM 3x6x7

2x 903318 SFH M3x18

2x 930308 BB 3x8x4

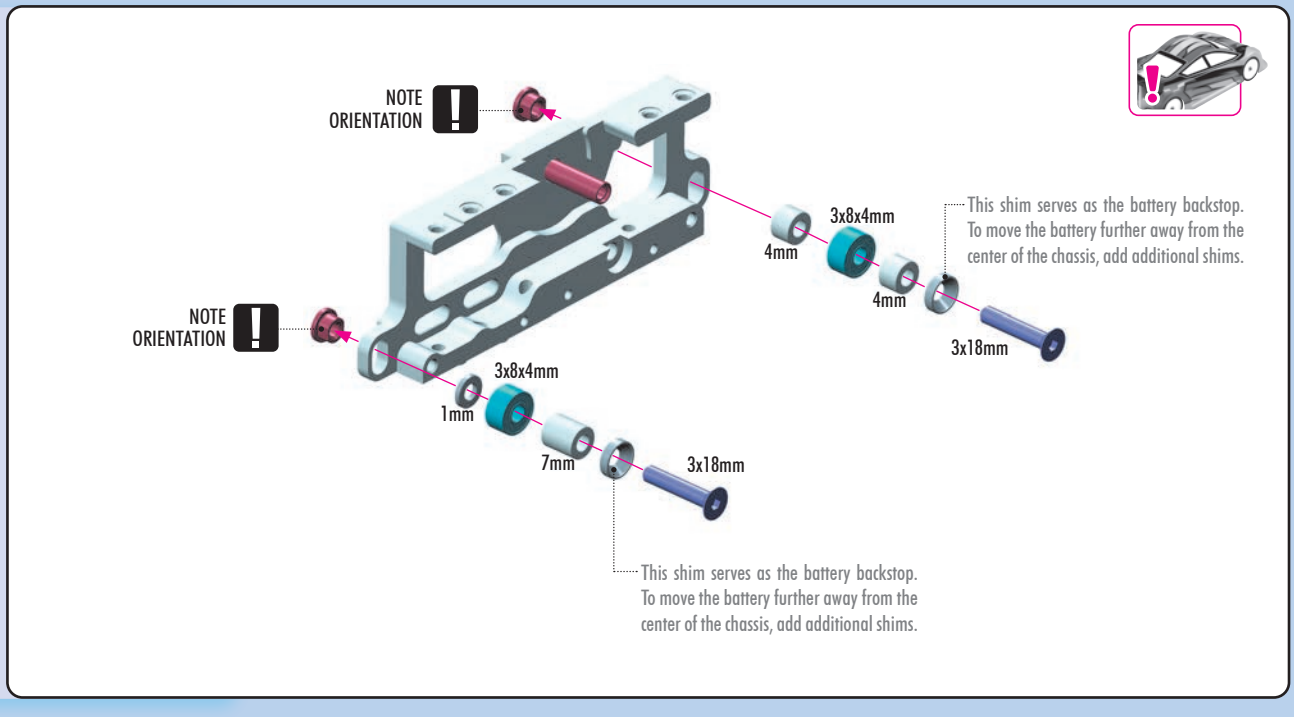

OPTION #309852
X4 BRASS WEIGHTS NICKEL COATED FOR MOTOR MOUNT 4g+4g+8g

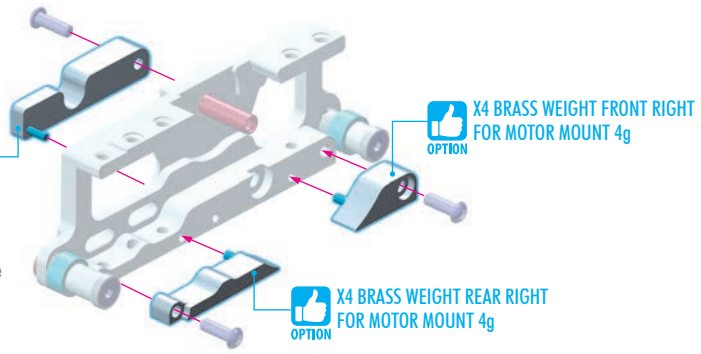

MOTOR MOUNT WEIGHT ADJUSTMENT

These optional brass pieces place the extra weight close to the X4 center to minimize the effects on the front-to-rear weight bias.

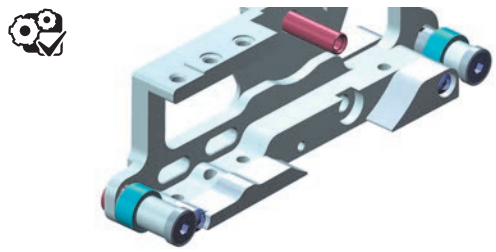

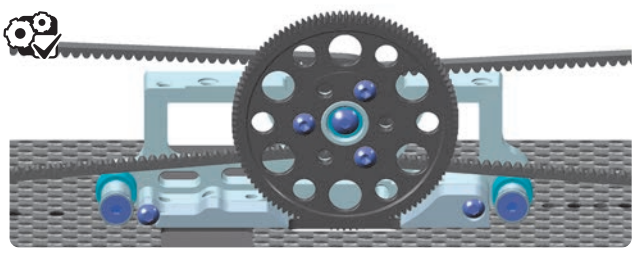

1x 902305 SH M3x5

1x 962042 S 4x6x0.1



VIDEO TECH TIP

BELT TENSION ADJUSTMENT

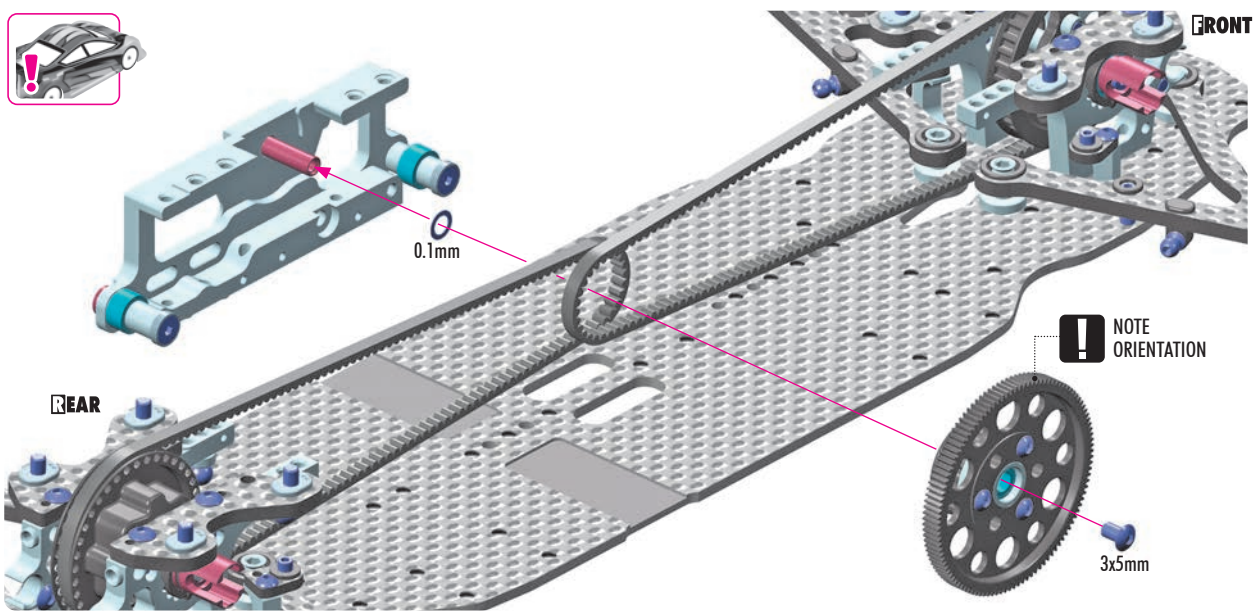

2x 903305 SFH M3x5



Use only the 2 rearmost screws to attach the motor mount.

INITIAL SETTING

2x 903305 SFH M3x5

MOTOR MOUNT FLEX ADJUSTMENT

The motor mount is part of the chassis flex adjustment. Adding or removing screws from the mount will create different flex settings for different tracks and traction levels.

NOTE: When removing screws from the motor mount, the spur gear becomes more susceptible to breakage in crashes.



VIDEO TECH TIP MOTOR MOUNT FLEX

SOFT

INITIAL SETTING

LOW & MEDIUM traction conditions.

For use only the 2 rearmost screws to attach the motor mount (as shown). DO NOT install the 3 screws immediately in front of & behind the spur gear. This allows the chassis to flex more in the central area, and will improve traction (especially on-power). Rear traction will be improved through the entire corner, but initial reaction will decrease. This setting is recommended for low- to medium traction conditions, both on carpet and asphalt.

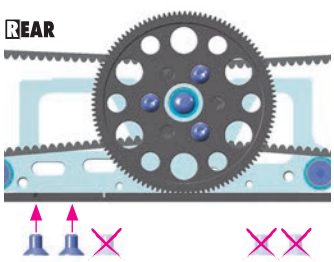

2x 3x5mm

MEDIUM

MEDIUM traction conditions.

For use only the 3 rearmost screws to attach the motor mount (as shown); DO NOT install the screws in front of the spur gear. This provides a good compromise between stability and initial response. The car will have more rear traction than the full stiff setting, but will NOT be as stable as the soft setting.

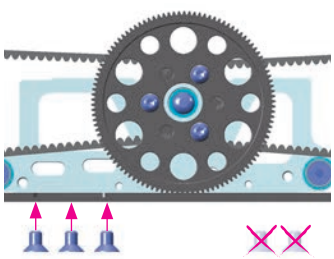

3x 3x5mm

STIFF

HIGH-TRACTION carpet conditions.

For use the 3 rearmost screws and one in front of the spur gear to attach the motor mount (as shown); DO NOT install the very front screw. Will give great steering response, but with reduced mechanical traction. The car will have more cornering speed, but will be more difficult to drive. Mainly recommended for high-traction carpet conditions.

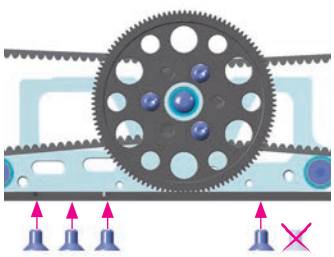

4x 3x5mm

EXTRA STIFF

HIGH-TRACTION US BLACK carpet conditions.

For using all screws to attach the motor mount (as shown) will give the best feeling for US black carpet. This setting provides the best stability and traction for these specific conditions.

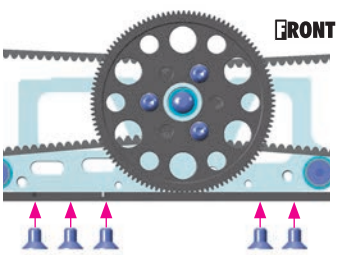

5x 3x5mm

2x 303121-K
SHIM 3x6x0.5

3x 903305
SFH M3x5

2x 903306
SFH M3x6

OPTION

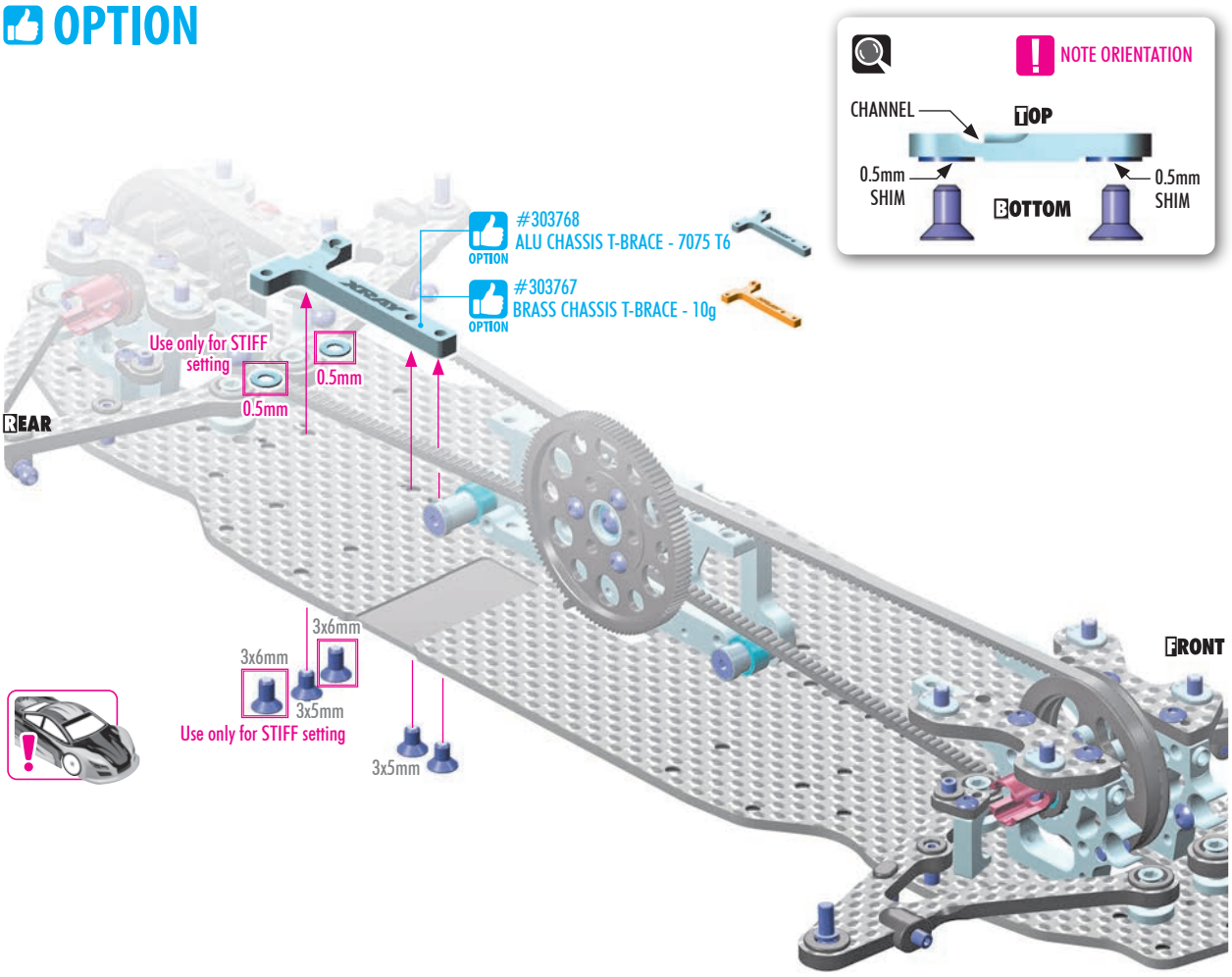

VIDEO TECH TIP

CHASSIS & TOP DECKS

CHASSIS FLEX ADJUSTMENT

The brace provides chassis flex adjustment possibilities depending on which screws are connected.

SOFT

When the brace is NOT installed, the car will have the most steering and rotation. However, the car will be more difficult to drive as it is less stable. Recommended for medium-high traction conditions and for small, technical tracks with many hairpin corners.



SOFT - MEDIUM

Install the brace using only the 2 forward bottom centerline screws (as shown). (as shown). This provides improved on-power stability but still offers great off-power steering and rotation. Recommended for medium-high traction conditions and for small, technical tracks with many hairpin corners.

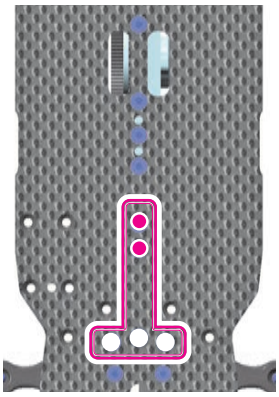

MEDIUM

Install the brace using all 3 bottom centerline screws (as shown). This provides improved on-power stability and traction, but makes the car push more off-power. Recommended for low- or high-traction conditions where stability and traction is needed.

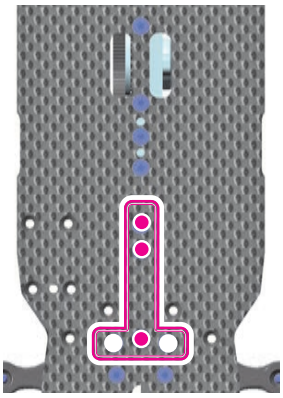

STIFF

In addition to installing all 3 bottom centerline screws, also install the 2 rear side screws but with 0.5mm shims between the brace and the chassis. This setting provides maximum stability.

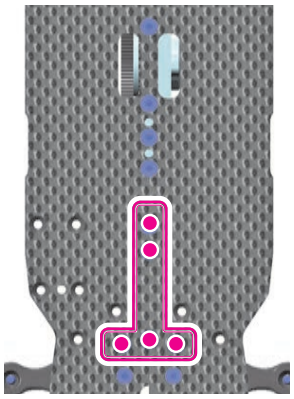

2x 303142-K SHIM 3x5x0.5

2x 902310 SH M3x10

2x 903305 SFH M3x5

2x 913305 110° SFH M3x5

Used only for 1.5mm alu chassis

FRONT SHOCK HOLDERS FLEX ADJUSTMENT

The brace provides chassis flex adjustment possibilities depending on which screws are connected.

FLEX ALTERNATIVE 1. INITIAL SETTING

Attach the shock holder to both the chassis and bulkhead for free yet predictable handling for the easiest control. Recommended as a starting point for all traction levels.

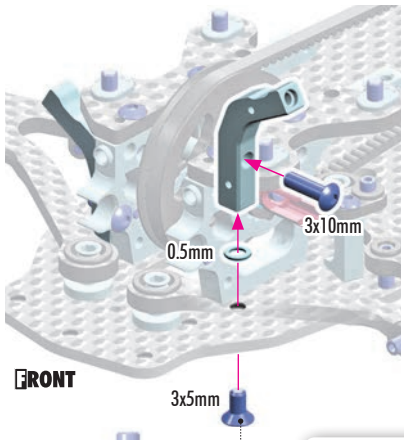

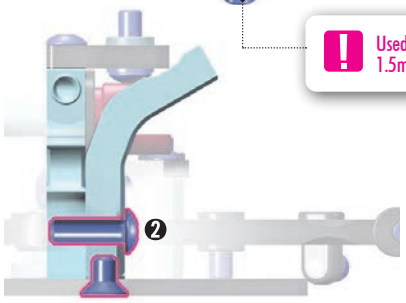

» All screws TIGHTEN GENTLY
» Fully TIGHTEN in this order

FLEX ALTERNATIVE 2.

Attach the shock holder to only the chassis for maximum mechanical traction. Recommended for low to medium traction tracks.

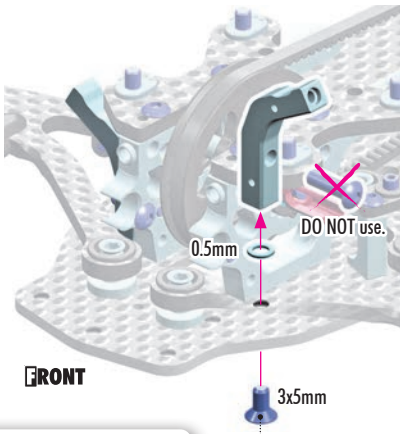

Used only for 1.5mm alu chassis

FLEX ALTERNATIVE 3.

Attach the shock holder to only the bulkhead for more aggressive reaction, but reduced mechanical traction may be more difficult to drive. Recommended for medium to high traction conditions.

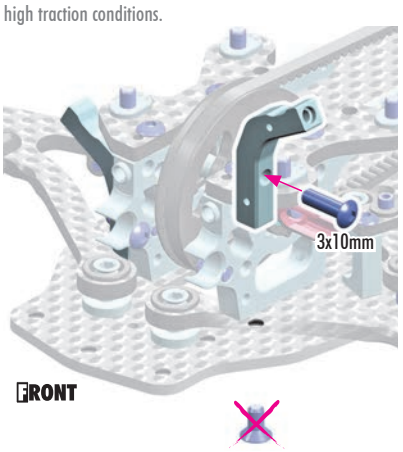

3x5mm
DO NOT use.



2x 303142-K SHIM 3x5x0.5

2x 902310 SH M3x10

2x 903305 SFH M3x5

2x 913305 110° SFH M3x5

Used only for 1.5mm alu chassis

REAR SHOCK HOLDERS FLEX ADJUSTMENT

The brace provides chassis flex adjustment possibilities depending on which screws are connected.

FLEX ALTERNATIVE 1. INITIAL SETTING

Attach the shock holder to both the chassis and bulkhead for free yet predictable handling for the easiest control. Recommended as a starting point for all traction levels.

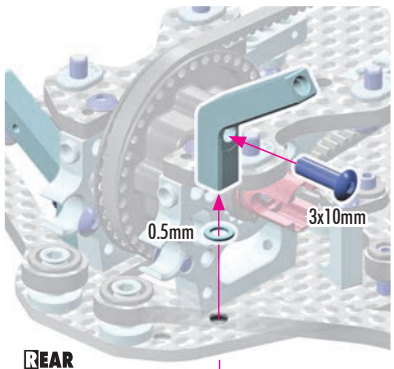

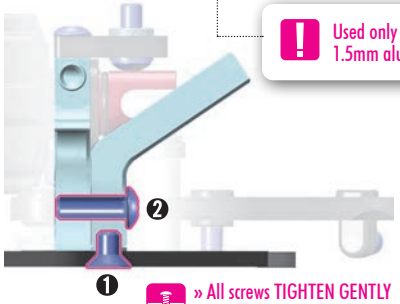

» All screws TIGHTEN GENTLY
» Fully TIGHTEN in this order

FLEX ALTERNATIVE 2.

Attach the shock holder to only the chassis for maximum mechanical traction. Recommended for low to medium traction tracks.

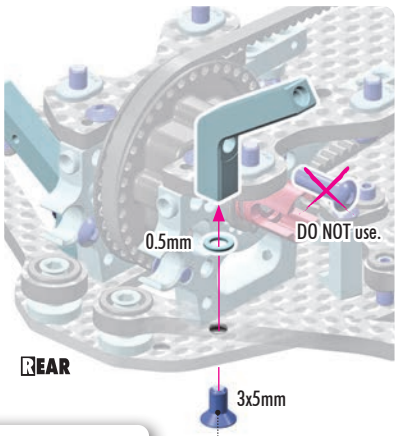

Used only for 1.5mm alu chassis

FLEX ALTERNATIVE 3.

Attach the shock holder to only the bulkhead for more aggressive reaction, but reduced mechanical traction may be more difficult to drive. Recommended for medium to high traction conditions.

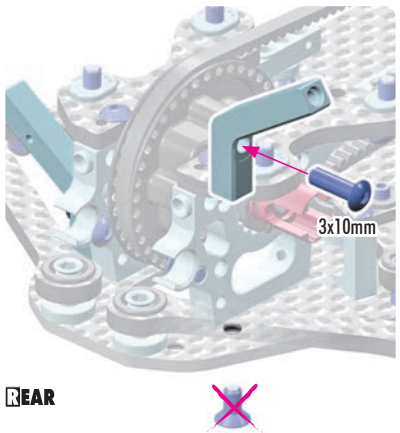

3x5mm
DO NOT use.



4. STEERING

OPTION #301090-L X4 CARBON TOP DECK - SPLIT FRONT - 1.6mm
#301091-L X4 CARBON TOP DECK - SPLIT REAR - 1.6mm



OPTION #301092
X4 CARBON TOP DECK - 1PC - 2.0mm



OPTION #301090-K X4 GLASS FIBER TOP DECK - SPLIT FRONT - 1.5mm
#301091-K X4 GLASS FIBER TOP DECK - SPLIT REAR - 1.5mm





OPTION #302553
ALU STEERING PLATE 7.5mm FOR DUAL SERVO SAVER



OPTION #302571
X4 CARBON STEERING PLATE SET

OPTION #301158-T
TITANIUM TOP DECK HEX SCREW M3x5.5mm (2)

OPTION #302590
ALU DUAL SERVO SAVER SCREW M3x7 (2)

OPTION

HUDY TITANIUM BALL STUD				
#990004	D=4.9	L=4	S=3.5	OPTION
#990010	D=4.9	L=10	S=3.5	OPTION

OPTION

HUDY TITANIUM PIVOT BALL			
#990102	D=4.9	S=3.5	OPTION



OPTION #303138-K or 303138-O
ALU SHIM 3x7x2.0mm (10)

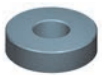

OPTION #302610
ADJ. TURNBUCKLE L/R 39mm
HUDY SPRING STEEL™ (2)



OPTION #302612-O
ALU ADJ. TURNBUCKLE M3 L/R 39mm
ORANGE - SWISS 7075 T6 (2)



BAG 04

301090	X4 CARBON TOP DECK - SPLIT FRONT OPEN - 2.0mm
301091	X4 CARBON TOP DECK - SPLIT REAR - 2.0mm
301158	TOP DECK HEX SCREW M3x5.5 - HUDY SPRING STEEL™ (2)
302517-K	X4 ALU DUAL STEERING ARM - BLACK + BALL-BEARINGS (2)
302539-C	X4 ALU STEERING POST FOR DUAL SERVO SAVER - DEEPER COUNTERSUNK (2)
302544	ALU SHIM FOR RADIAL PLAY ADJUSTMENT OF STEERING ARM (2)
302552	ALU STEERING PLATE 8.0mm FOR DUAL SERVO SAVER
302612	ALU ADJ. TURNBUCKLE M3 L/R 39mm - SWISS 7075 T6 (2)
302663-V2	COMPOSITE BALL JOINT 5mm - OPEN (8)
303122-K	ALU SHIM 3x6x1.0mm - BLACK (10)
303137-K	ALU SHIM 3x7.5x2.0mm - BLACK (10)
303210	REAR TURNBUCKLE L/R 26mm - HUDY SPRING STEEL (2)
303454-V2	BALL JOINT 4.9mm - OPEN (4)
306219	COMPOSITE SET OF SERVO SHIMS (4)
362648	BALL END 4.9mm WITH THREAD 4mm (2)
362652	BALL END 4.9mm WITH THREAD 10mm (2)
372503	COMPOSITE SERVO SAVER - X-STIFF - SET - V2
372649	BALL END 4.2mm WITH 4mm THREAD (2)
372651	PIVOT BALL UNIVERSAL 4.9mm - HUDY SPRING STEEL™ (2)
372661	COMPOSITE STEERING BALL-JOINT OPEN 4.2mm (4)
902303	HEX SCREW SH M3x4 SMALL HEAD - STAINLESS (10)
902305	HEX SCREW SH M3x5 (10)
902306	HEX SCREW SH M3x6 (10)
903305	HEX SCREW SFH M3x5 (10)
940508	BALL-BEARING 5x8x2.5 RUBBER-SEALED - OILED (2)
962045	WASHER S 4x5x0.2 (10)

Numbers in parentheses ( ) refer to quantities when purchased separately.

2x STEERING LINKS

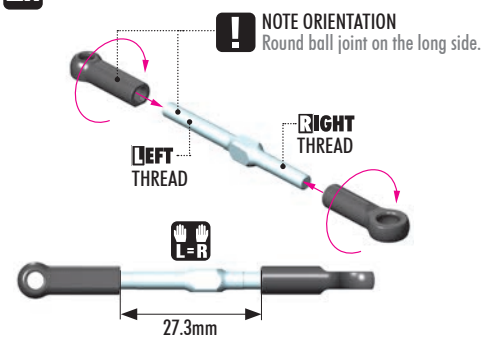

OPTION #302612-O
ALU ADJ. TURNBUCKLE M3 L/R
39mm ORANGE - SWISS 7075 T6 (2)



OPTION #302610
ADJ. TURNBUCKLE L/R 39mm
HUDY SPRING STEEL (2)



SERVO LINK

Adjust servo link to fit your servo.

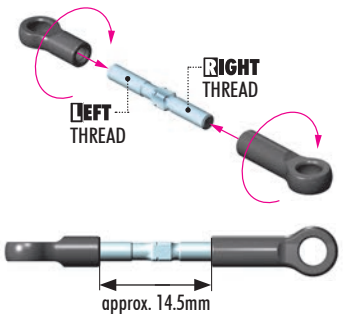

1x 303137-K SHIM 3x7.5x2



1x 902303 SH M3x4

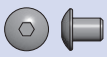

2x 902306 SH M3x6



4x 940508 BB 5x8x2.5



VIDEO TECH TIP

STEERING SYSTEM

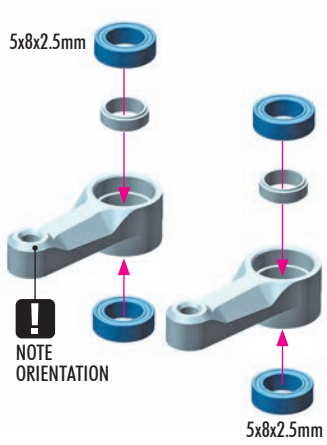

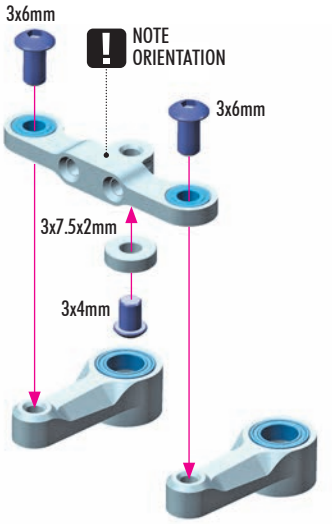

OPTION #302553 ALU STEERING PLATE 7.5mm FOR DUAL SERVO SAVER



Optional 7.5mm steering plate improves in-corner steering and steering response. Recommended for lower traction tracks or technical tracks.

STEERING LOCK ADJUSTMENT:

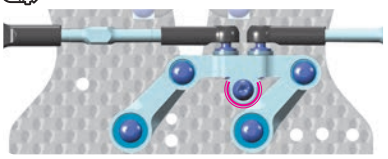

It is recommended to use less steering lock on carpet compared to previous models. 23° is the recommended starting point to achieve maximum cornering speed while maintaining easy drivablity.

IMPORTANT! Check for clearance between the steering plate and anti-roll bar. If there is contact when setting the steering angle up to the maximum 26°, ensure that the anti-roll bar is properly centered

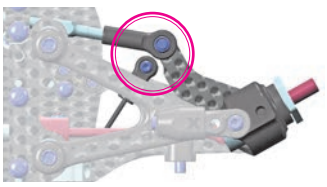

For VTA class:

Never use more than 25° steering lock otherwise the tire will touch the arm. We recommend to use 25° steering lock for asphalt. For high traction carpet conditions, we recommend to use steering lock between 21° to 23° to avoid traction rolling and to improve cornering speed.



VTA CLASS

0x 303122-K SHIM 3x6x1



2x L=R

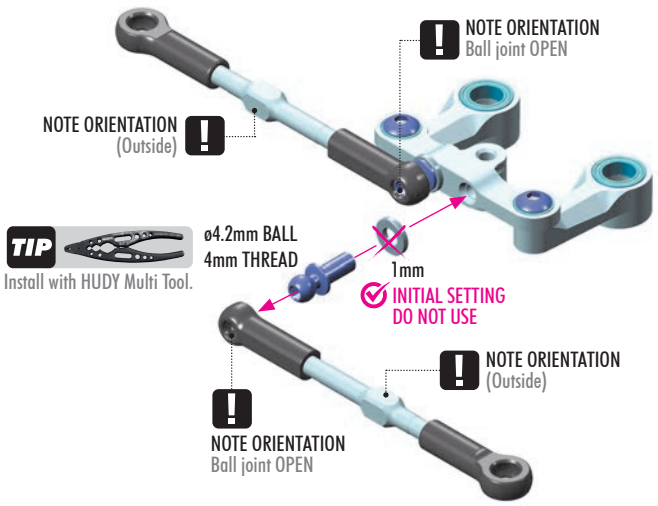



4. STEERING

2x 306219
SHIM 3x6x2



VIDEO TECH TIP

STEERING SYSTEM

SERVO HORN HEIGHT

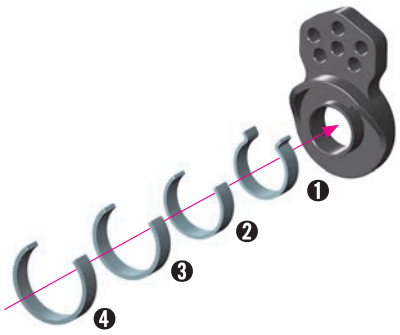

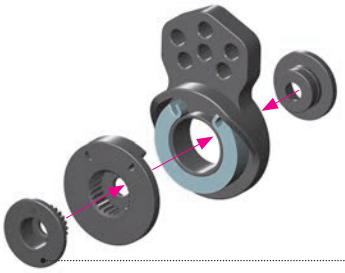

Use the adapter that matches the steering servo.

F = 25T H = 24T K = 23T

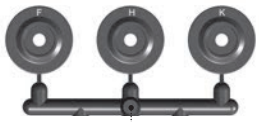

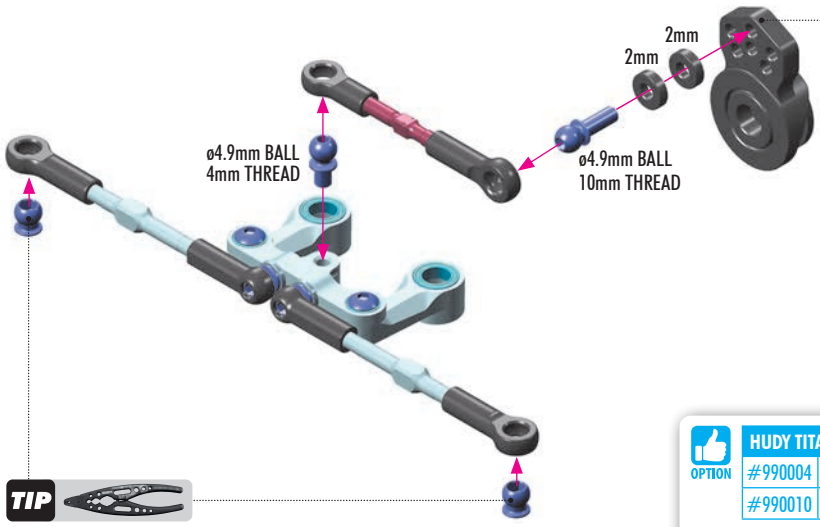

INITIAL SETTING



TIP

Install with HUDY Multi Tool.

OPTION

HUDY TITANIUM BALL STUD				
#990004	D=4.9	L=4	S=3.5	OPTION
#990010	D=4.9	L=10	S=3.5	OPTION



OPTION

HUDY TITANIUM PIVOT BALL			
#990102	D=4.9	S=3.5	OPTION



2x 902305
SH M3x5

2x 903305
SFH M3x5



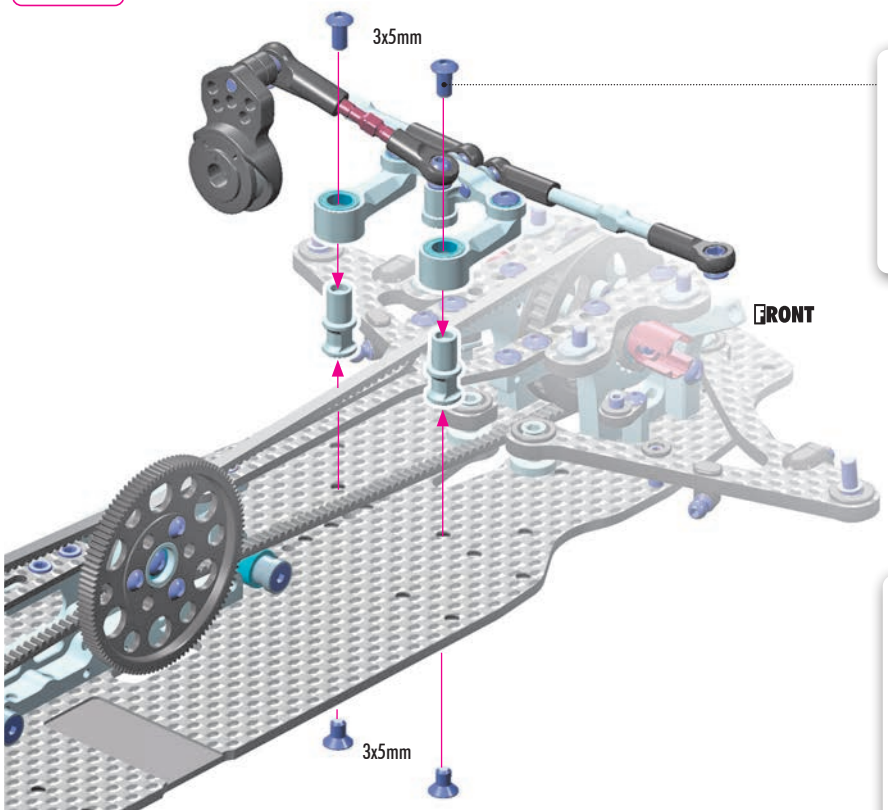

OPTION

#302590
ALU DUAL SERVO SAVER SCREW M3x7 (2)



The optional screw removes excessive radial play from the steering.

OPTION

#302571
X4 CARBON STEERING PLATE SET



The optional carbon bridge stiffens the steering assembly and improves initial steering response. This option is mainly recommended for medium - to high-traction carpet racing.

The servo horn length has a significant impact on the reaction to steering input. The length can help tune the car for different conditions and driving styles. The length measurement is from center of the servo spline output to the center of the steering link mounting point.

The included XRAY servo saver offers 4 different length choices. The top hole is 19mm, the second row is 16.5mm, the third row is 15mm. The shortest row is NOT used for X4 cars.

For more in-corner steering and improved steering input response, aluminum servo horns may be used.

The optional HUDY direct servo horns have several useful variations of offsets and lengths for X4 cars.

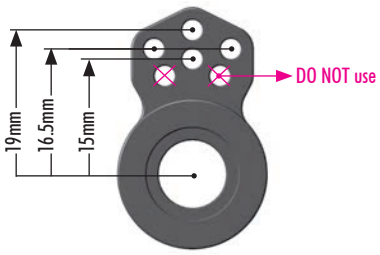

HUDY ADJUSTABLE CLAMP SERVO HORNS

OPTION HUDY

#293414	23T	KO, Sanwa
#293416	25T	Futaba, Savöx

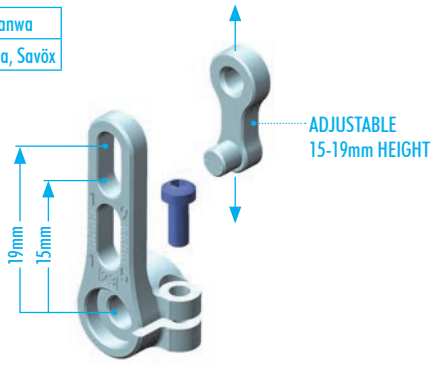

HUDY ALU FIXED SERVO SAVER 1/10 TC & FWD - SET

OPTION HUDY

#293352

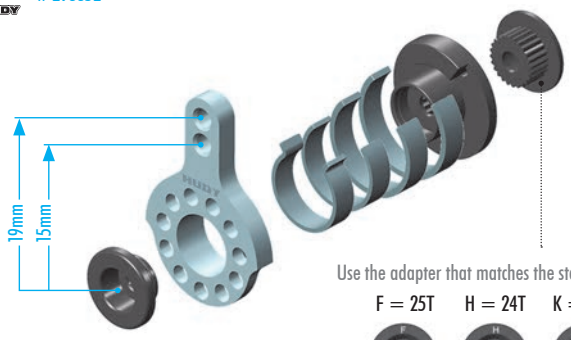

Use the adapter that matches the steering servo.

F = 25T H = 24T K = 23T



ALU SERVO HORNS - OFFSET

OPTION HUDY

#293491	23T	KO, Sanwa
#293492	24T	Hitec
#293493	25T	Futaba



CLAMP ALU SERVO HORNS - OFFSET

OPTION HUDY

#293401	23T	KO, Sanwa
#293402	24T	Hitec
#293403	25T	Futaba



CLAMP ALU SERVO HORNS - OFFSET

OPTION HUDY

#293411	23T	KO, Sanwa
#293412	24T	Hitec
#293413	25T	Futaba



HUDY ALU SERVO HORNS

OPTION HUDY

#293497	23T	KO, Sanwa
#293498	24T	Hitec
#293499	25T	Futaba

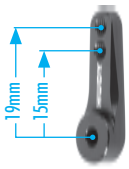

HUDY CLAMP ALU SERVO HORNS

OPTION HUDY

#293404	23T	KO, Sanwa
#293405	24T	Hitec
#293406	25T	Futaba

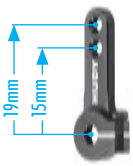

LONGER SERVO HORN LENGTH: Less servo rotation needed to reach the full steering lock, resulting in more responsive and immediate reaction to driver input. A servo horn that is too long can make the car feel nervous to drive. Most XRAY drivers prefer the 19mm length (top row on kit servo saver or 2nd hole on optional 2-hole alum horn).

SHORTER SERVO HORN LENGTH: More servo rotation needed to reach full steering lock; providing improved control and consistency from the more precise feel and may help avoid traction rolling in high traction conditions. A shorter horn length requires an increased radio EPA to maintain the desired steering travel. Using a horn length that is too short can make the car feel lazy.

IMPORTANT!

Using an aluminum servo horn DOES NOT provide any servo protection, increasing the risk of servo damage from crashes.

TOP DECK (SPLIT) FLEX ADJUSTMENT

Split top deck provides 3 different flex setting alternatives.

SOFT

FRONT

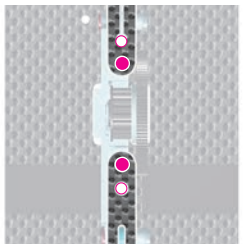

REAR

This allows maximum flex and provides maximum steering. However, the car is less stable on-power.

MEDIUM

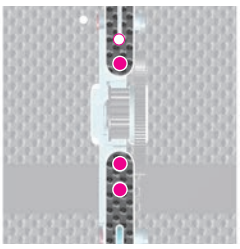

This setting provides reduced rear flex which increases stability. Rotation is decreased.

STIFF

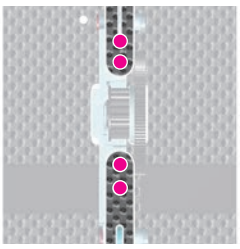

FRONT

INITIAL SETTING

REAR

This setting provides reduced flex both in front and rear. Mid-corner steering is decreased, rotation is decreased. This setting provides maximum stability.

ALTERNATIVE 1

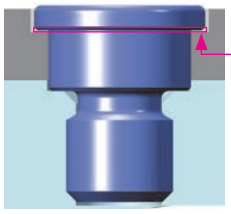

INITIAL SETTING

With 0.2mm shims

Using the special shims under the top-deck screws eliminates the top-deck flex. This setting makes the car more stable and easier to drive but reduces in-corner steering and rotation.

ALTERNATIVE 2

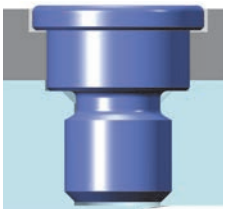

Without Shims

Not using the special shims under the top-deck screws allows more flex around the motor mount area. More front flex reduces initial steering but improves mid corner steering.

OPTION #301158-T TITANIUM TOP DECK HEX SCREW M3x5.5mm (2)





VIDEO TECH TIP

TOP DECK FLEX

4x 301158 SCREW 3x5.5

8x 902305 SH M3x5

4x 962045 S 4x5x0.2

OPTION #301092 X4 CARBON TOP DECK - 1PC - 2.0mm

Optional 1pc top deck lengthens the flex point, which increases mechanical grip and slows down initial reaction. Recommended for low to medium grip asphalt and carpet tracks where maximum mechanical grip is required.



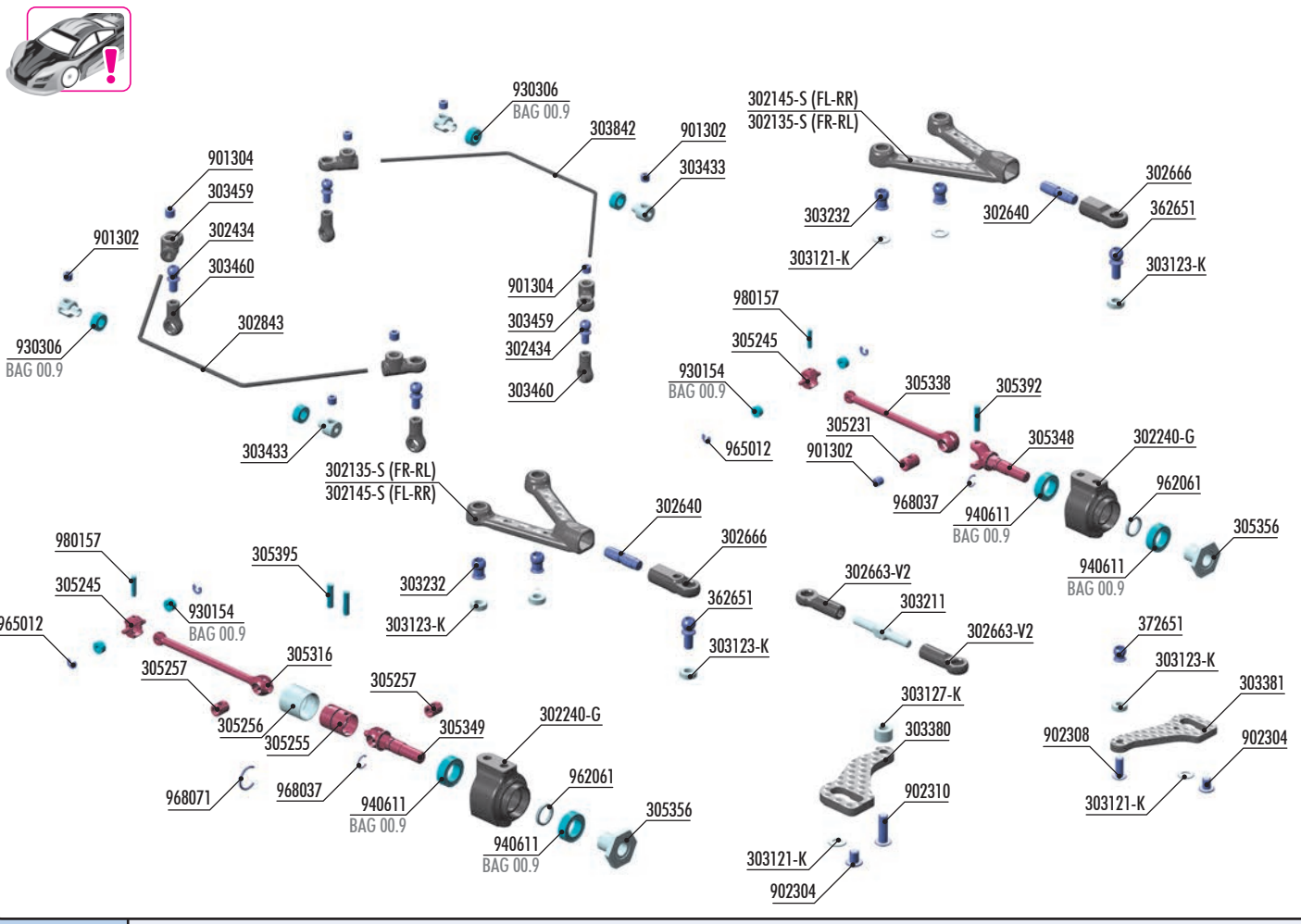

BAG 05

302135-S	X4 CFF™ UPPER ARM - V SHAPE - SOFT - FR/RL
302145-S	X4 CFF™ UPPER ARM - V SHAPE - SOFT - FL/RR
302240-G	X4 COMPOSITE STEERING BLOCK - GRAPHITE
302434	ANTI-ROLL BAR STEEL BALL END 3.8mm WITH 2.5x4mm THREAD (2)
302640	ADJUSTABLE CAMBER SCREW 14mm M4 L/R - HUDY SPRING STEEL™ (2)
302663-V2	COMPOSITE BALL JOINT 4.9mm - OPEN (8)
302666	COMPOSITE BALL JOINT 4.9mm F+R - OPEN (2+2)
302843	X4 ANTI-ROLL BAR AAM - ABOVE ARM MOUNT - FRONT 1.3mm
303121-K	ALU SHIM 3x6x0.5mm - BLACK (10)
303123-K	ALU SHIM 3x6x2.0mm - BLACK (10)
303127-K	ALU SHIM 3x6x4.0mm - BLACK (10)
303211	ALU ADJUSTABLE TURNBUCKLE L/R 30mm - SWISS 7075 T6 (2)
303232	X4 UPPER ARM BALL UNIVERSAL 4.9mm - HUDY SPRING STEEL™ (2)
303380	X4 CARBON FRONT STEERING PLATE (L+R)
303381	X4 CARBON REAR ARS PLATE (L+R)
303433	ALU ANTI-ROLL BAR BUSHING o1.7mm - 6mm (2)
303459	COMPOSITE ANTI-ROLL BAR o1.6MM BALL JOINT 3.9MM (4)
303460	COMPOSITE ANTI-ROLL BAR BALL JOINT 3.9MM - LONG (4)
303842	X4 ANTI-ROLL BAR AAM - ABOVE ARM MOUNT - REAR 1.2mm
305231	DRIVE SHAFT COUPLING - HUDY SPRING STEEL™
305245	ECS BB DRIVE SHAFT ADAPTER - HUDY SPRING STEEL™ (2)
305255	ECS BB SC DRIVE SHAFT CASE - HUDY SPRING STEEL™
305256	ECS BB SC ALU DRIVE SHAFT SLEEVE - SWISS 7075 T6
305257	ECS BB SC DRIVE SHAFT COUPLING - HUDY SPRING STEEL™
305306	X4 ECS BB DRIVE SHAFT 58mm - HUDY SPRING STEEL™ - SET
305316	X4 ECS BB DRIVE SHAFT 58mm - HUDY SPRING STEEL™ (2)
305335	X4 ECS BB SC DRIVE SHAFT 58mm - HUDY SPRING STEEL™ - COMPL. SET
305338	X4 CVD BB DRIVE SHAFT 54mm - HUDY SPRING STEEL™ (2)
305348	X4 CVD DRIVE AXLE - SPRING CLIP - HUDY SPRING STEEL™
305349	X4 ECS DRIVE AXLE - SPRING CLIP - HUDY SPRING STEEL™
305356	X4 ALU WHEEL HUB - SPRING CLIP - SWISS 7075 T6 (2)
305392	DRIVE SHAFT PIN 2 x 10 WITH FLAT SPOT (2)
305395	ECS BB SC DRIVE SHAFT PIN 2 x 8.4 (2)
305408	X4 CVD BB DRIVE SHAFT 54mm - HUDY SPRING STEEL™ - SET
362651	BALL END 4.9mm WITH THREAD 8mm (2)
372651	PIVOT BALL UNIVERSAL 4.9mm - HUDY SPRING STEEL™ (2)
901302	HEX SCREW SB M3x2.5 (10)
901304	HEX SCREW SB M3x4 (10)
902304	HEX SCREW SH M3x4 - STAINLESS (10)
902308	HEX SCREW SH M3x8 (10)
902310	HEX SCREW SH M3x10 (10)
930154	BALL-BEARING 1.5x4x2 STEEL SEALED - OIL (4)
930306	BALL-BEARING 3x6x2.5 STEEL-SEALED - OILED (2)
940611	BALL-BEARING 6x10x3 RUBBER SEALED - OIL (2)
962061	WASHER S 6x7.5x1.0 (10)
965012	E-CLIP 1.2 (10)
968037	C-CLIP 3.7 (10)
968071	C-CLIP 7.1 (10)
980157	PIN 1.5x7.3 (10)

Numbers in parentheses ( ) refer to quantities when purchased separately.

BAG 05.1

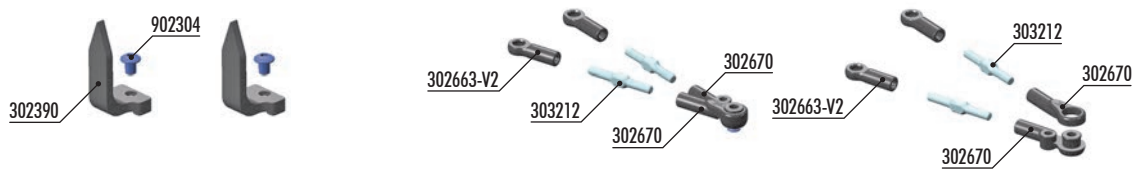

302390	X4 COMPOSITE CASTER GAUGE (2)
302663-V2	COMPOSITE BALL JOINT 4.9MM - OPEN (8)
302670	COMPOSITE UPPER ARM LINKS (1+1+1+1)
303212	ALU ADJ. TURNBUCKLE L/R 26MM - SWISS 7075 T6 (2)
902304	HEX SCREW SH M3x4 - STAINLESS (10)

Numbers in parentheses ( ) refer to quantities when purchased separately.

5. FRONT & REAR SUSPENSION

2x 901302 SB M3x2.5
2x 305392 P 2x10
4x 305395 P 2x8.4
4x 968037 C 3.7
2x 968071 C 7.1

2x REAR TRANSMISSION - CVD DRIVE SHAFT

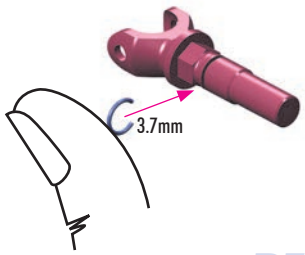



Insert the clip into the groove on the axle. The clip should fit smoothly without extra force and should NOT require pliers. Make sure the clip will rotate after installation.

2x FRONT TRANSMISSION - ECS DRIVE SHAFT



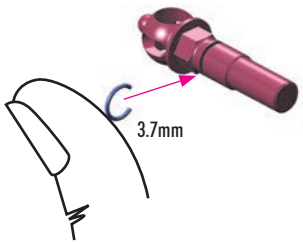

REAR

1:1 CVD Coupling



THREAD LOCK

Apply a small amount of thread lock and confirm it does not leak onto other driveshaft parts. After assembly, wait until the thread lock dries and check if the drive shaft and axle can move freely in all directions.

DO NOT OVERTIGHTEN

GRAPHITE GREASE

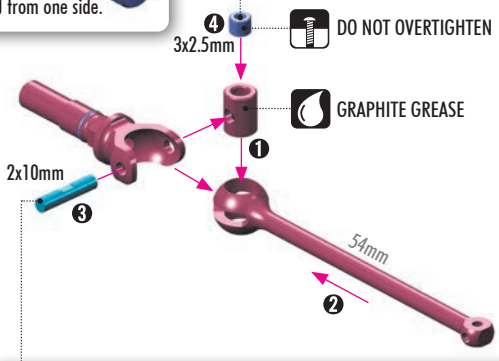

DETAIL STEP 3 4



Set-screw against the flat spot.

Make sure the pin is centered in the driveshaft after assembly.

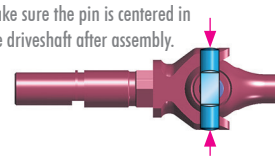

OPTION

REAR CVD DRIVE SHAFTS		
#305407	52mm - BB CVD	OPTION
#305408	54mm - BB CVD	INCLUDED

#305407
Shorter 52mm rear drive shafts improve rotation and off power steering but decreases rear traction.
Recommended for small technical tracks and high traction conditions.

#305370
54mm rear drive shafts using 305241 replacement caps generate more rear traction.
Recommended for very low traction conditions. Requires 304970/304971 driveshaft adapters.

FRONT



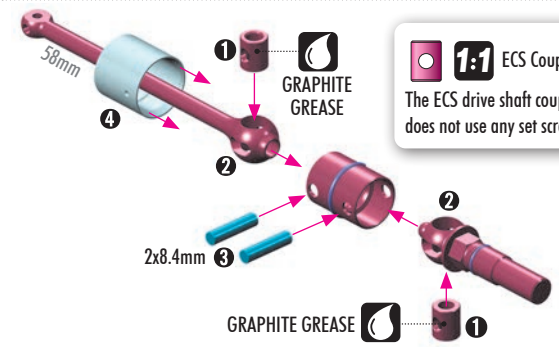

1:1 ECS Coupling
The ECS drive shaft coupling does not use any set screw.

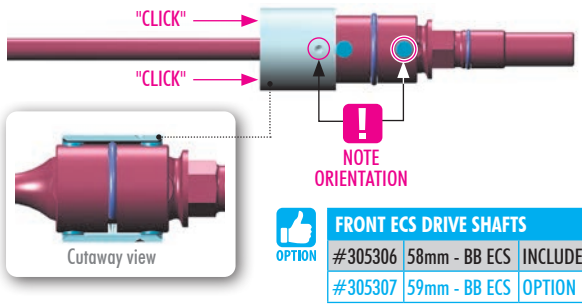

OPTION

FRONT ECS DRIVE SHAFTS		
#305306	58mm - BB ECS	INCLUDED
#305307	59mm - BB ECS	OPTION

#305307
Longer 59mm front drive shafts provide more stability but reduce steering.
Recommended for high traction carpet.

#305360
58mm front drive shafts must be used with 305241 replacement caps.



VIDEO TECH TIP

DRIVE SHAFTS

8x 930154 BB 1.5x4x2
8x 965012 E 1.2

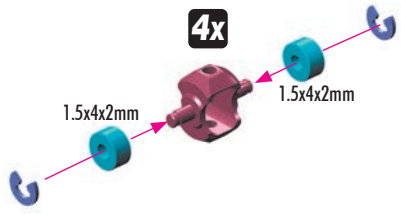

4x 980157 P 1.5x7.3

2x CVD DRIVE SHAFT

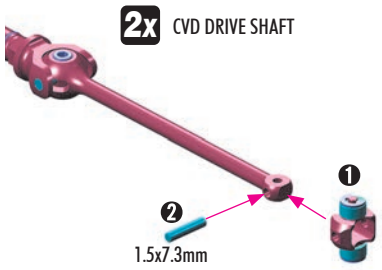

2x ECS DRIVE SHAFT

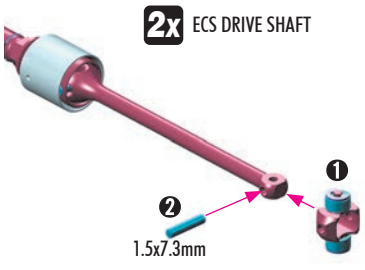

TIP DISASSEMBLY OF ECS DRIVE SHAFT

To disassemble the alu drive shaft sleeve from the drive shaft, hold the sleeve firmly with a HUDY Multi-Tool, and lightly push the drive shaft down against a flat surface.

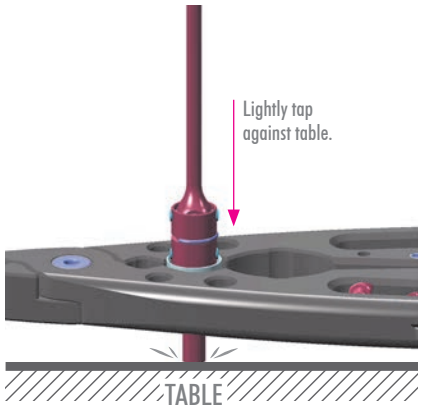

4x 940611 BB 6x10x3

2x 962061 S 6x7.5x1

2x L=R REAR TRANSMISSION

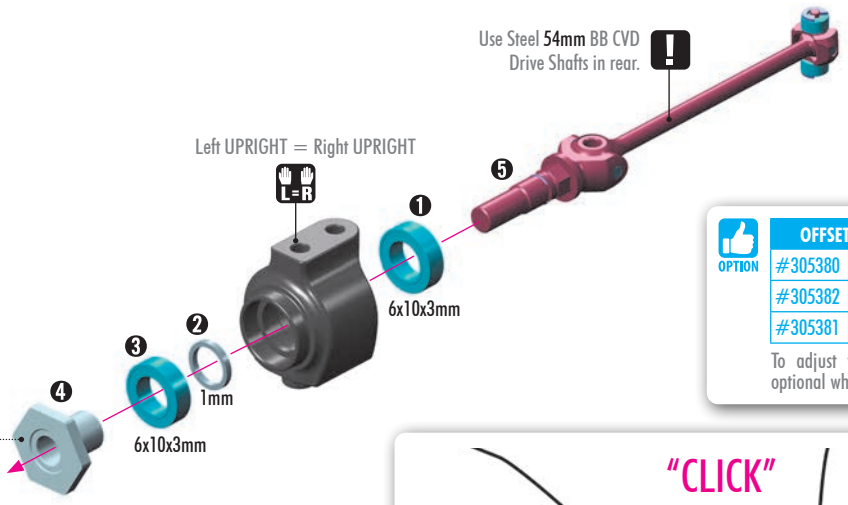

OPTION

OFFSET WHEEL SHIMS		
#305380	0.75mm	OPTION
#305382	0.5mm	OPTION
#305381	1.0mm	OPTION

To adjust vehicle width, add or remove optional wheel shims.

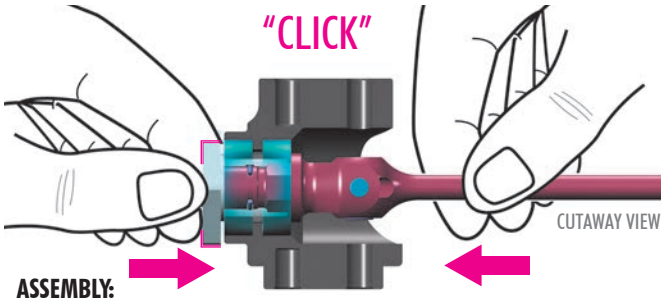

ASSEMBLY:

When installing the wheel hub on the drive axle, make sure the inside groove in the hub seats over the clip on the axle.

To confirm proper installation there should be a 'click' noise when the clip engages the inner groove in the wheel hub. There should be slight axial play once fully seated.

DISSASEMBLY:

To remove the wheel hub from the axle, push the end of the axle back through the wheel hub to separate the wheel hub from the inner clip.

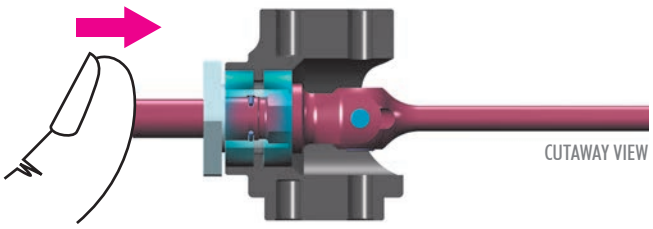

#305356
ALU WHEEL HUB (INCLUDED)

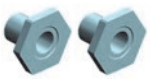

Standard wheel hubs are the best choice for asphalt tracks as they provide great balance between traction and steering in these conditions.

OPTION #305359
ALU WHEEL HUB +0.5mm

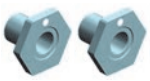

Wider hubs free up the car, making it more stable and easier to drive. The wide hubs are recommended for carpet tracks.

OPTION #305354
ALU WHEEL HUB -0.5mm



For very low traction conditions, the narrower wheel hubs can generate more traction and steering but will make the car nervous and decrease cornering speed.



VIDEO TECH TIP

FRONT & REAR UPRIGHTS

OPTION

STEERING BLOCKS		
#302240-M	MEDIUM	OPTION
#302240-H	HARD	OPTION
#302240-G	GRAPHITE	INCLUDED
#302241	ALU	OPTION



MEDIUM
Medium hubs generate maximum side traction. Recommended for low traction asphalt conditions in the modified class.

HARD
Hard hubs are recommended for low to medium traction conditions to help generate more traction.

ALU
Alu hubs are recommended for high traction surfaces to improve rotation and free up the car, but they will decrease traction. Alu hubs also improve durability in serious crashes.

2x 902304 SH M3x4

2x 902308 SH M3x8

2x REAR TRANSMISSION

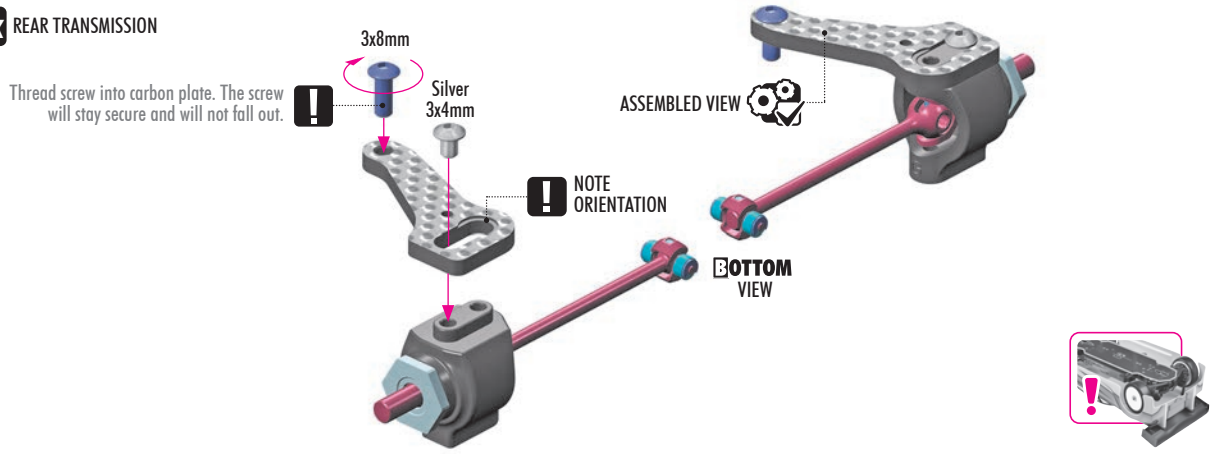

4x 940611 BB 6x10x3

2x 962061 S 6x7.5x1

2x FRONT TRANSMISSION

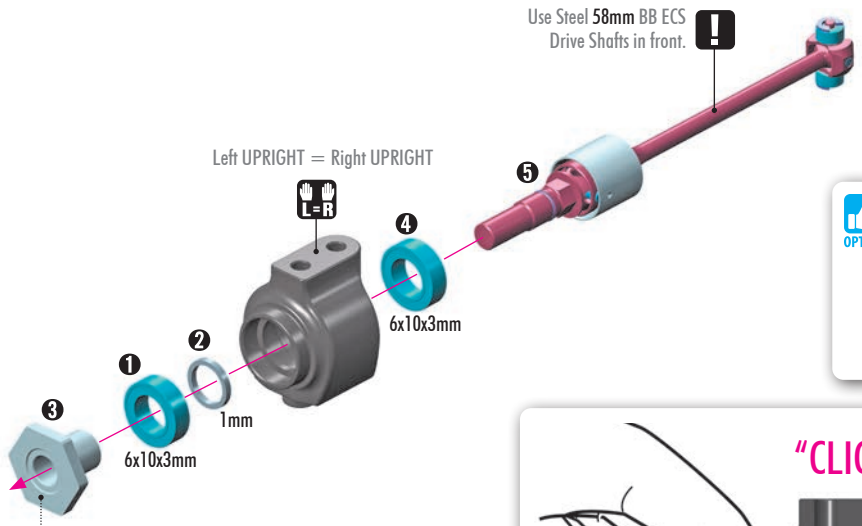

OPTION

OFFSET WHEEL SHIMS		
#305380	0.75mm	OPTION
#305382	0.5mm	OPTION
#305381	1.0mm	OPTION

To adjust vehicle width, add or remove optional wheel shims.

#305356
ALU WHEEL HUB (INCLUDED)

Standard wheel hubs are the best choice for asphalt tracks as they provide great balance between traction and steering in these conditions.

OPTION #305359
ALU WHEEL HUB +0.5mm

Wider hubs free up the car, making it more stable and easier to drive. The wide hubs are recommended for carpet tracks.

OPTION #305354
ALU WHEEL HUB -0.5mm

For very low traction conditions, the narrower wheel hubs can generate more traction and steering but will make the car nervous and decrease cornering speed.

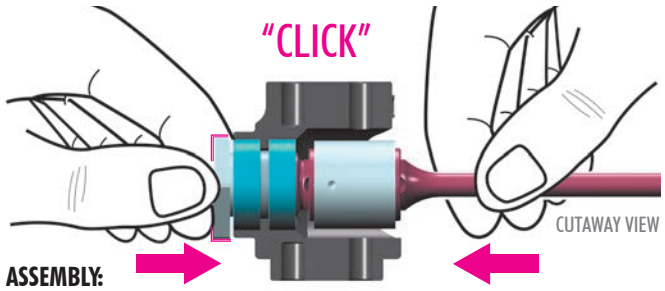

ASSEMBLY:

When installing the wheel hub on the drive axle, make sure the inside groove in the hub seats over the clip on the axle.

To confirm proper installation there should be a 'click' noise when the clip engages the inner groove in the wheel hub. There should be slight axial play once fully seated.

DISSASEMBLY:

To remove the wheel hub from the axle, push the end of the axle back through the wheel hub to separate the wheel hub from the inner clip.

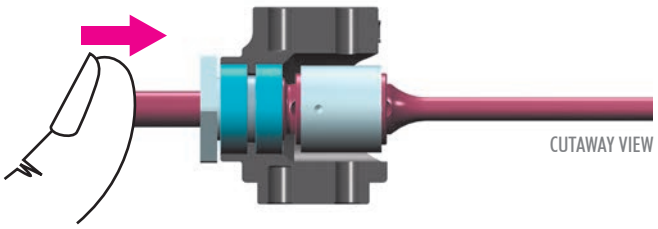

OPTION

STEERING BLOCKS		
#302240-M	MEDIUM	OPTION
#302240-H	HARD	OPTION
#302240-G	GRAPHITE	INCLUDED
#302241	ALU	OPTION



MEDIUM
Medium hubs generate maximum side traction. Recommended for low traction asphalt conditions in the modified class.

HARD
Hard hubs are recommended for low to medium traction conditions to help generate more traction.

ALU
Alu hubs are recommended for high traction surfaces to improve rotation and free up the car, but they will decrease traction. Alu hubs also improve durability in serious crashes.

2x 902304 SH M3x4

2x 902310 SH M3x10

2x FRONT TRANSMISSION

Thread screw into carbon plate. The screw will stay secure and will not fall out.

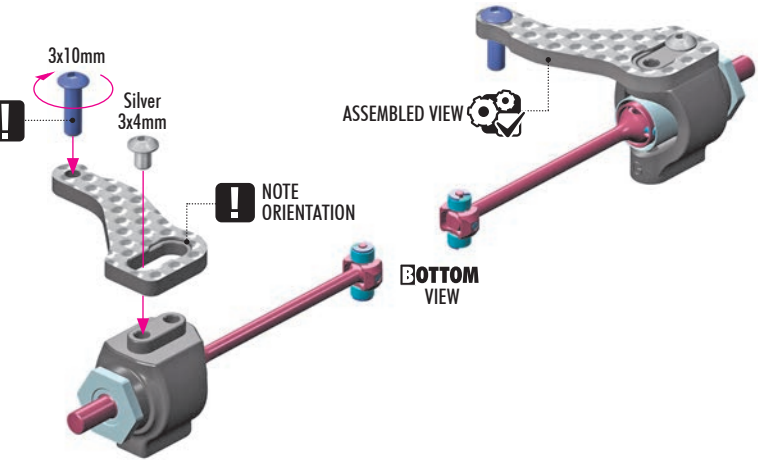

4x 303121-K
SHIM 3x6x0.5

VIDEO TECH TIP
ROLL-CENTER

2x REAR SUSPENSION

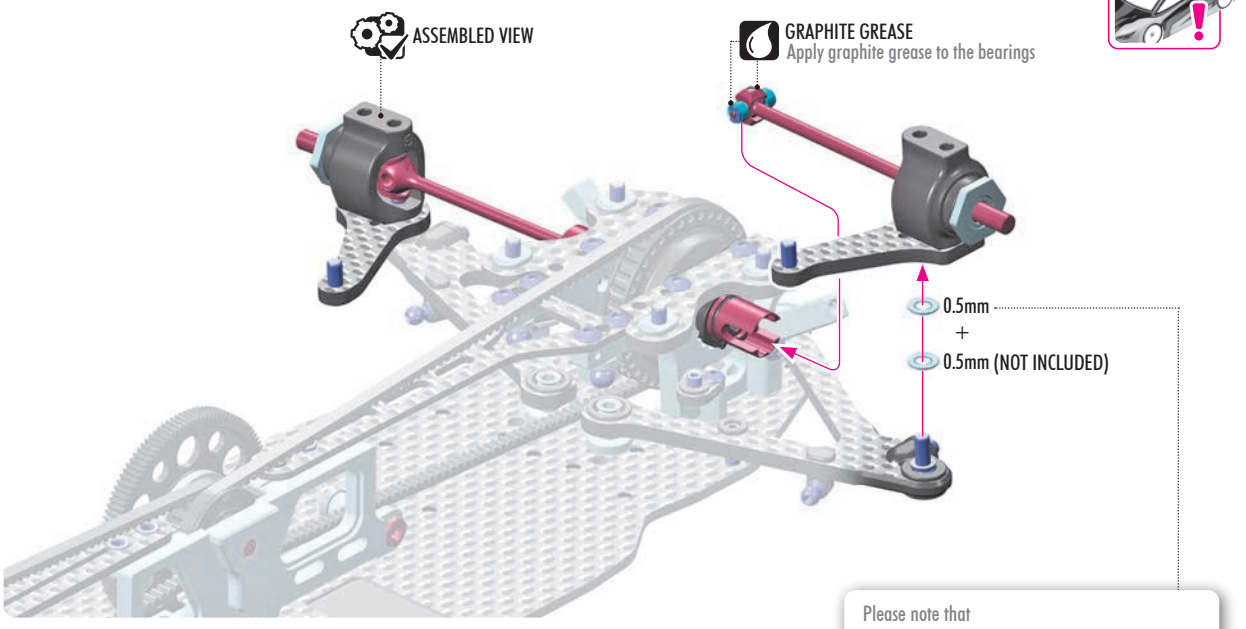

Please note that
0.5mm on X4'26 = 0mm on X4'25.

0.5mm SHIMS

Raising the rear axle height will improve rotation and off-power steering. Recommended for medium to high traction asphalt surfaces. Minimum shim thickness is 0.5mm; DO NOT use thinner.

When using more than 1mm shim under the hub, use the #303263 pivot ball with longer 6.5mm thread length to increase durability in serious crashes.
Make sure to check for clearance between the pivot ball threads and CVD pin.

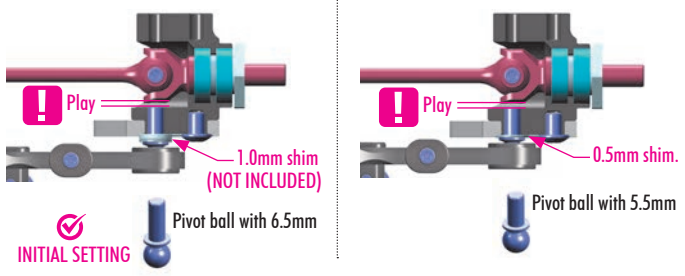

2x 303121-K
SHIM 3x6x0.5

2x FRONT SUSPENSION

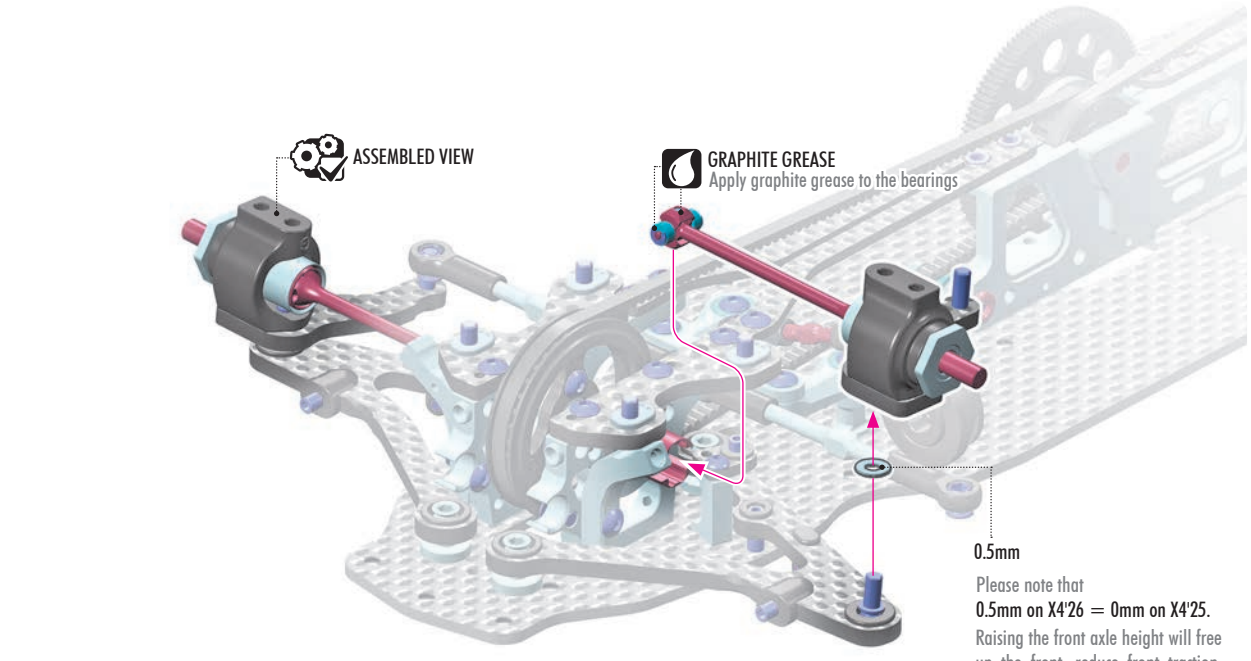

Please note that
0.5mm on X4'26 = 0mm on X4'25.
Raising the front axle height will free up the front, reduce front traction, and make the car more forgiving to drive. Minimum shim thickness is 0.5mm; DO NOT use thinner.

This kit includes two upper arm ALTERNATIVES. The traditional CFF™ UPPER ARM and UPPER ARM LINKS.
Please read the full descriptions before selecting the best alternative.

UPPER ARMS CFF™ ALTERNATIVE

CFF™ Upper Arms are suggested for most conditions as they provide neutral handling and require minimal set-up adjustments between runs.

INITIAL SETTING



VIDEO TECH TIP

CAMBER & UPPER ARMS

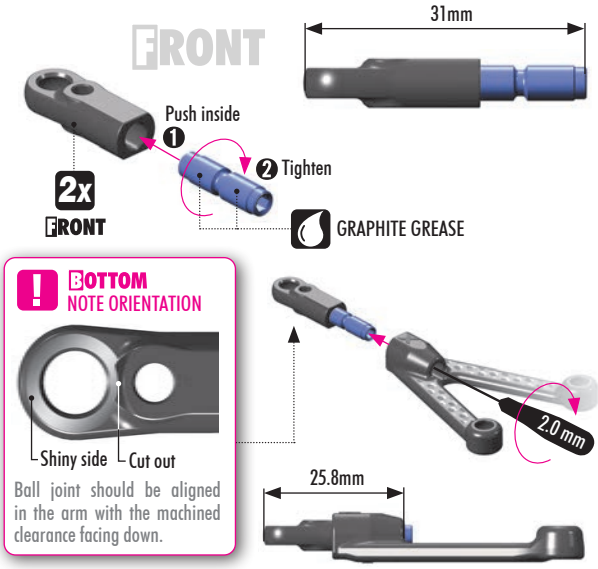

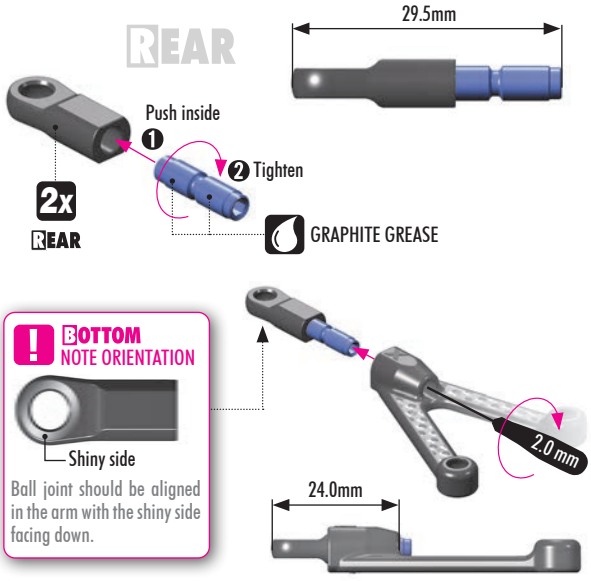

OPTION #302640-T
X4 ADJUSTABLE CAMBER SCREW 14mm M4 L/R - TITANIUM (2)



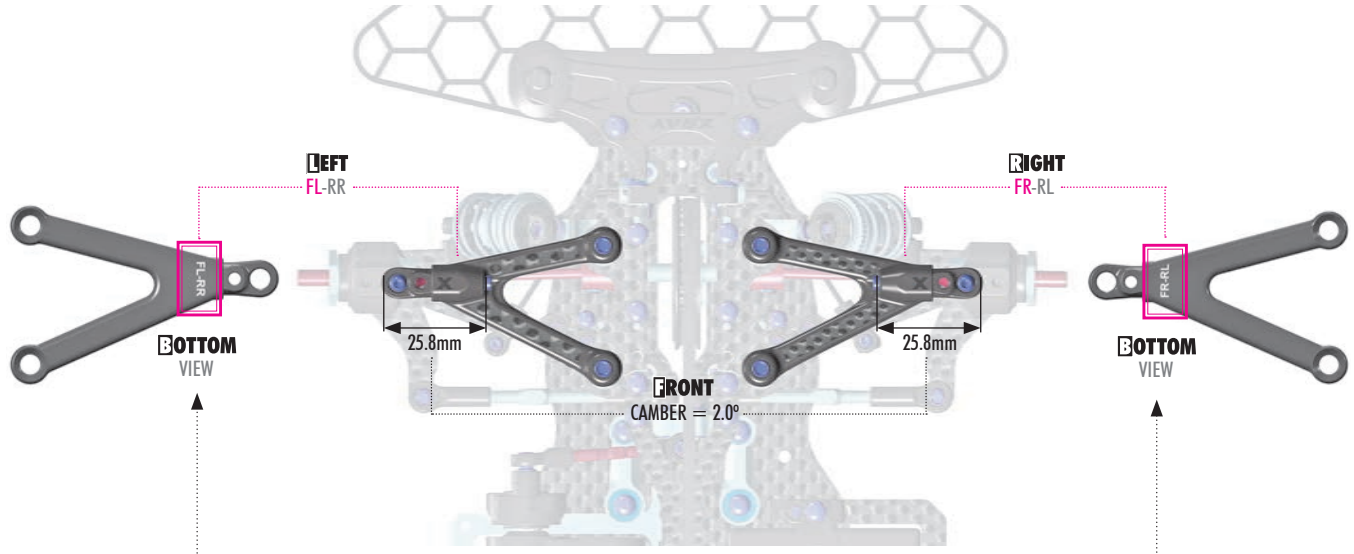

Check arm orientation so that each arm is in the correct location with the markings facing down when installed.

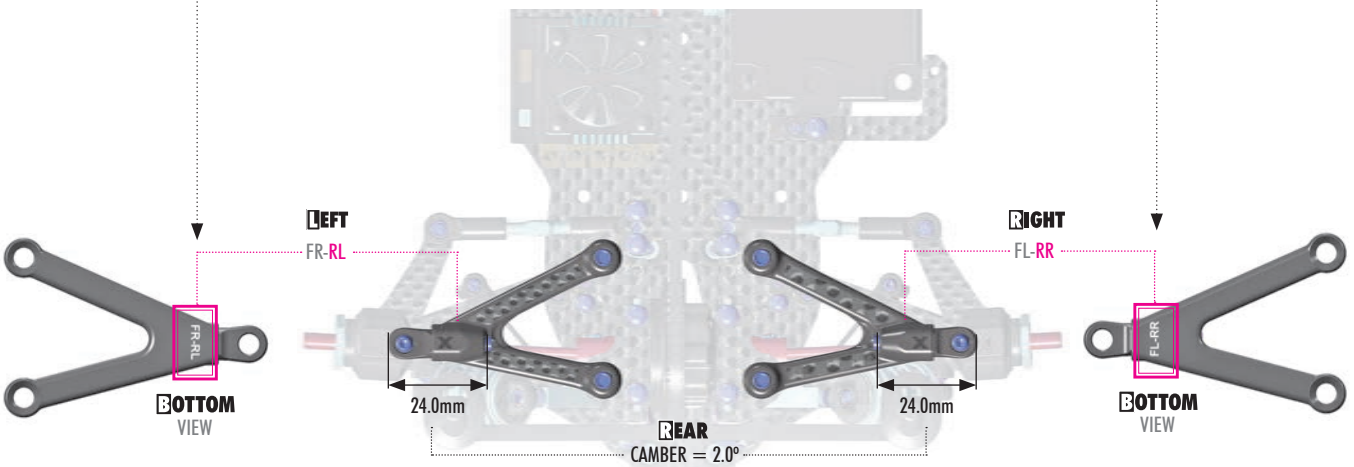

4x 303121-K SHIM 3x6x0.5

2x 303123-K SHIM 3x6x2



VIDEO TECH TIP

ROLL-CENTER

UPPER ARM OPTIONS

UPPER ARMS CFF™ ALTERNATIVE

REAR SUSPENSION

INITIAL SETTING

TIP

Install with HUDY Multi Tool.

ASSEMBLED VIEW

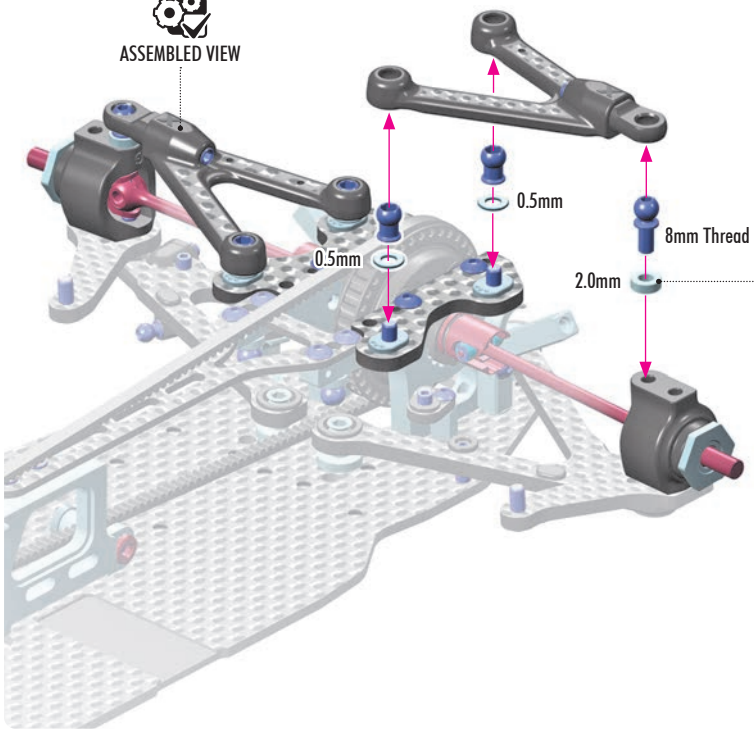

OPTION

HUDY TITANIUM BALL STUD				
#990008	D=4.9	L=8	S=3.5	OPTION



OPTION

HUDY TITANIUM PIVOT BALL			
#990101	D=4.9	S=5	OPTION



TIP

Rear upper arm location affects the rear roll-center and camber gain. Raising the arm with thicker shims on the upper clamps will lower the rear roll-center and decrease camber gain. Reducing the shim height on the upper clamps has the same effect as increasing the shim height on the outside.



6x 303123-K SHIM 3x6x2

UPPER ARMS CFF™ ALTERNATIVE

FRONT SUSPENSION

INITIAL SETTING

TIP

Install with HUDY Multi Tool.

ASSEMBLED VIEW

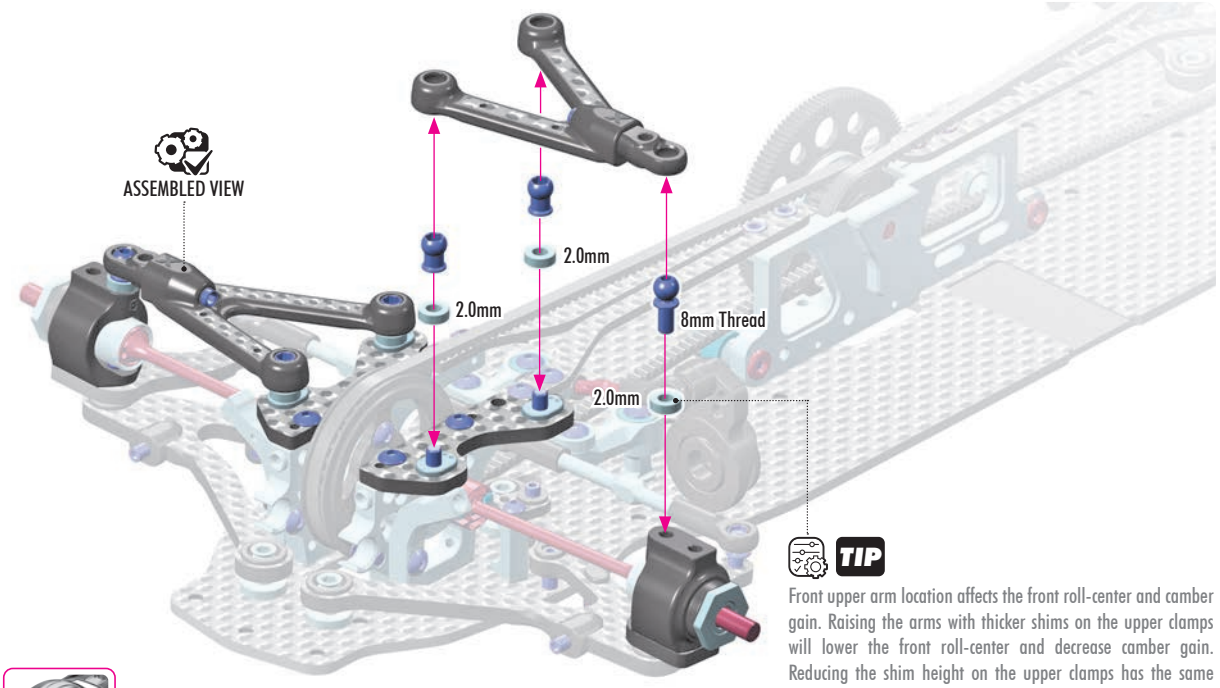

OPTION

HUDY TITANIUM BALL STUD				
#990008	D=4.9	L=8	S=3.5	OPTION



OPTION

HUDY TITANIUM PIVOT BALL			
#990101	D=4.9	S=5	OPTION



TIP

Front upper arm location affects the front roll-center and camber gain. Raising the arms with thicker shims on the upper clamps will lower the front roll-center and decrease camber gain. Reducing the shim height on the upper clamps has the same effect as increasing the shim height on the outside.



4x

ALTERNATIVE LINK STYLE UPPER ARMS

Replace the standard CFF upper arms. See full description below on when to use.

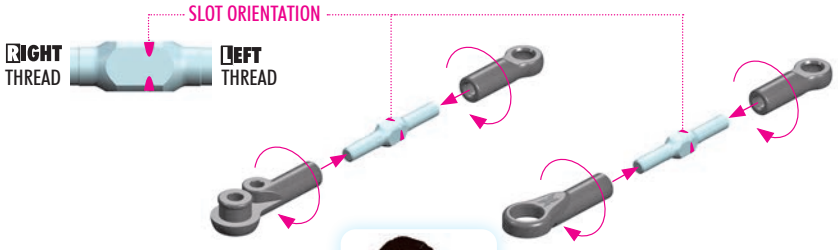

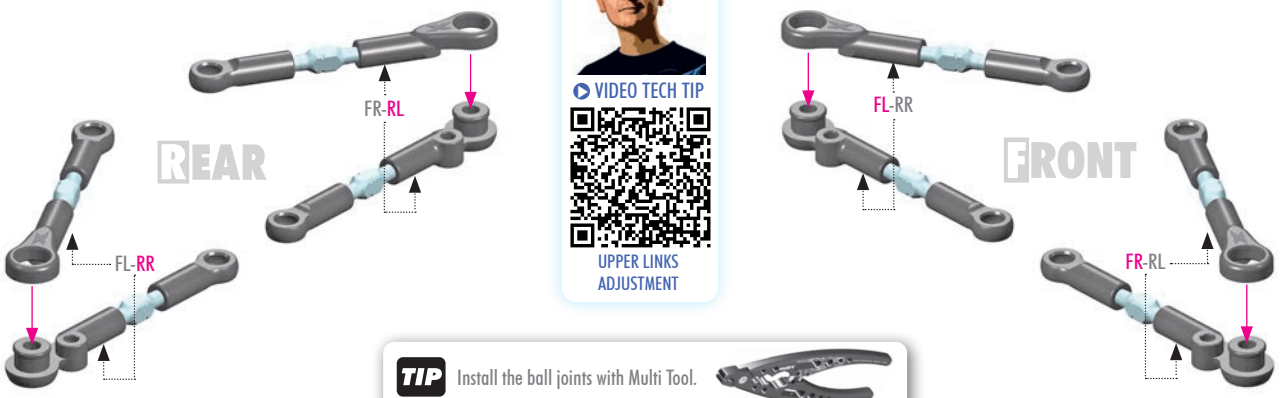



VIDEO TECH TIP

UPPER LINKS ADJUSTMENT

TIP Install the ball joints with Multi Tool.

LINK STYLE UPPER ARMS

The link style upper arms are also included in the kit as an alternative to the CFF arms, offering the freedom of choice to select the one with the preferred handling characteristics and adjustment capabilities.

Please see Page 52-54 for link adjustment instructions.

The added rigidity form the turnbuckles reduces flex of the suspension assembly, which has proven beneficial on certain track conditions such as medium to high traction asphalt and carpet. The car generates more initial reaction from the increased rigidity.

When switching form CFF to Upper Link arms, retain the same caster eccentric insert positions in the upper bulkheads as previously used.

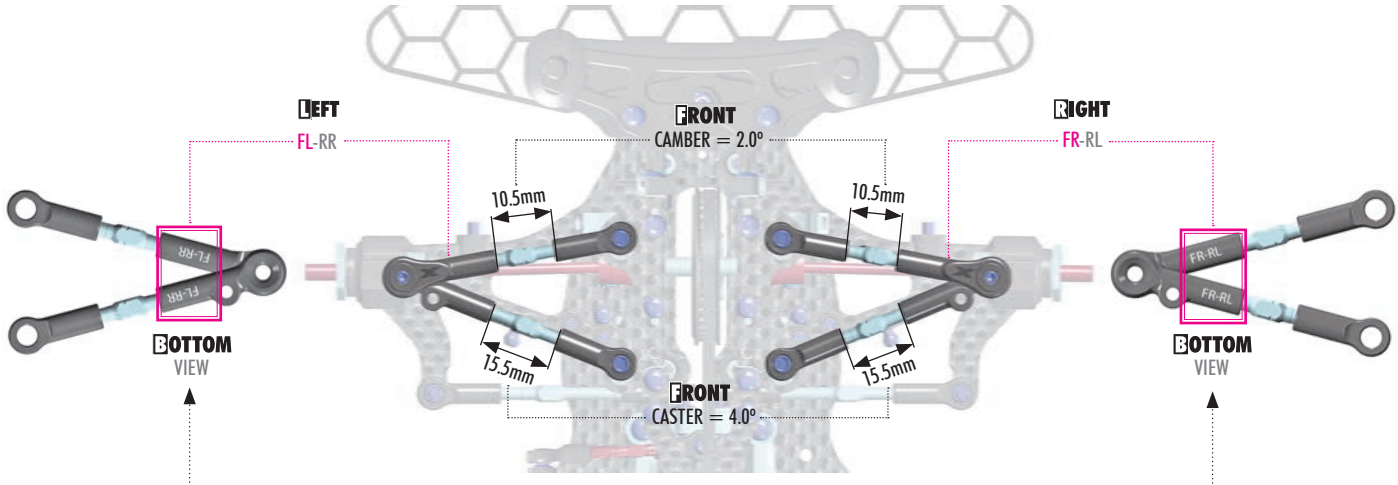

Check upper arm links orientation so that each link is in the correct location with the markings facing down when installed.

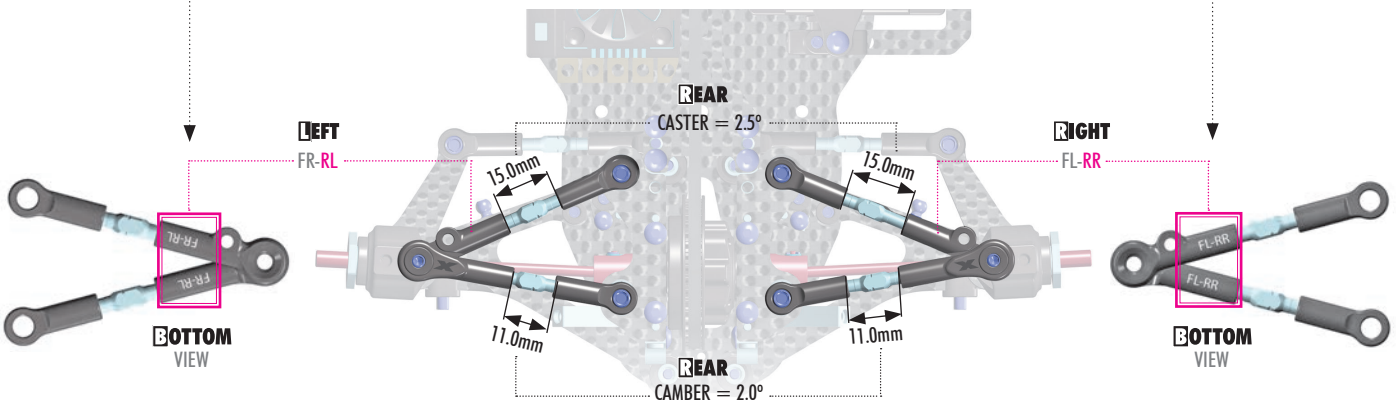

4x 303121-K SHIM 3x6x0.5

2x 303123-K SHIM 3x6x2

UPPER ARMS LINKS ALTERNATIVE
REAR SUSPENSION
(All parts INCLUDED)

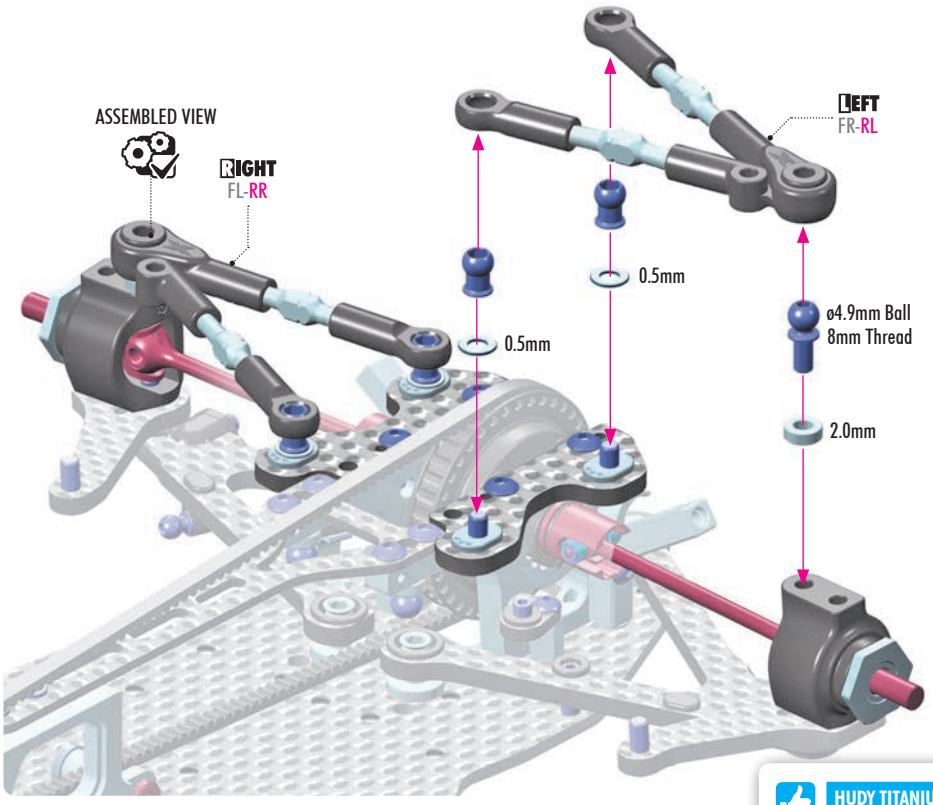

TIP
Install with HUDY Multi Tool.

VIDEO TECH TIP

UPPER ARM OPTIONS

OPTION

HUDY TITANIUM BALL STUD				
#990008	D=4.9	L=8	S=3.5	OPTION

OPTION

HUDY TITANIUM PIVOT BALL			
#990101	D=4.9	S=5	OPTION

UPPER ARMS LONGER LINKS ALTERNATIVE
REAR SUSPENSION
(Requires optional parts)

All-new upper clamp design allows longer upper link arms to be mounted as an alternative to the kit length. Longer links makes the car more stable and more consistent on medium- to high grip conditions because of reduced camber gain.

- Use #302612 ALU ADJUSTABLE TURNBUCKLE (NOT INCLUDED) for mounting the longer upper links.
- Use #362651 BALL END 4.9mm (NOT INCLUDED) for mounting the longer upper links into the upper clamp.

OPTION #362651
BALL END 4.9mm WITH THREAD 8mm (2)

OPTION #302612
ALU ADJ. TURNBUCKLE M3 L/R 39mm (2)

4x 303121-K SHIM 3x6x0.5

2x 303123-K SHIM 3x6x2

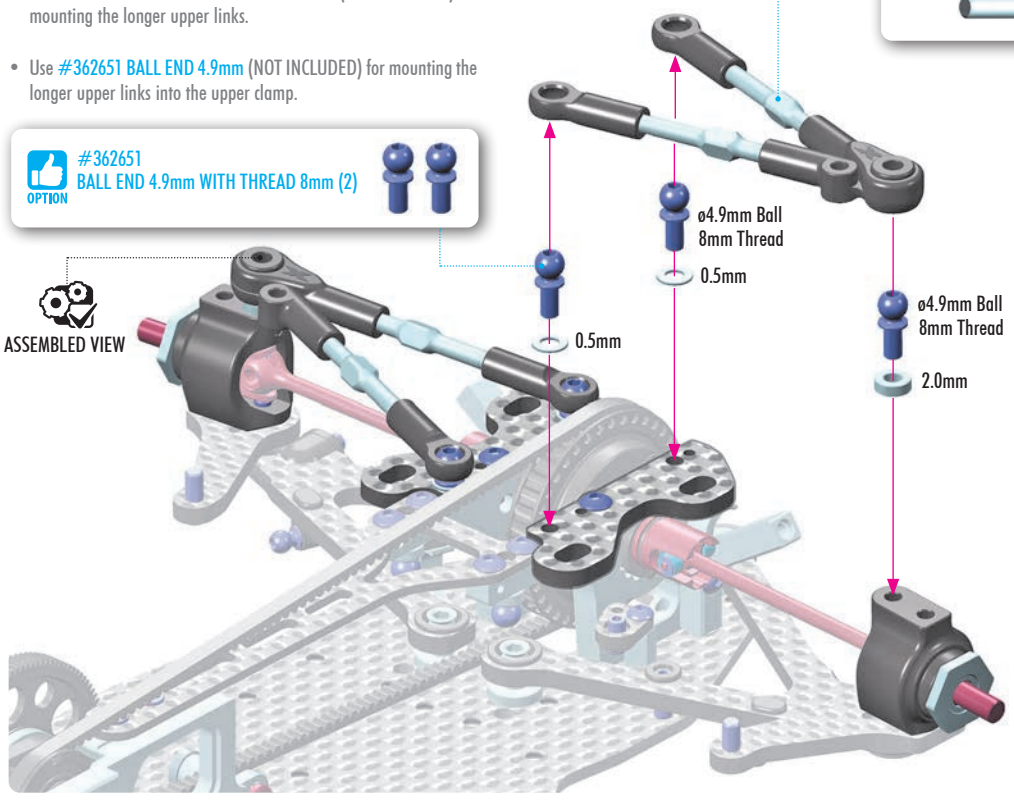

TIP
Install with HUDY Multi Tool.

6x 303123-K
SHIM 3x6x2

UPPER ARMS LINKS ALTERNATIVE
FRONT SUSPENSION
(All parts INCLUDED)

TIP
Install with HUDY Multi Tool.

ASSEMBLED VIEW

LEFT
FL-RR

RIGHT
FR-RL

2.0mm
2.0mm
2.0mm


VIDEO TECH TIP

UPPER ARM OPTIONS

OPTION

HUDY TITANIUM BALL STUD				
#990008	D=4.9	L=8	S=3.5	OPTION

OPTION

HUDY TITANIUM PIVOT BALL			
#990101	D=4.9	S=5	OPTION

UPPER ARMS LONGER LINKS ALTERNATIVE
FRONT SUSPENSION
(Requires optional parts)

All-new upper clamp design allows longer upper link arms to be mounted as an alternative to the kit length. Longer links makes the car more stable and more consistent on medium- to high grip conditions because of reduced camber gain.

- Use #302612 ALU ADJUSTABLE TURNBUCKLE (NOT INCLUDED) for mounting the longer upper links.
- Use #362651 BALL END 4.9mm (NOT INCLUDED) for mounting the longer upper links into the upper clamp.

OPTION
#362612
ALU ADJ. TURNBUCKLE M3 L/R 39mm (2)

TIP
Install with HUDY Multi Tool.

OPTION
#362651
BALL END 4.9mm WITH THREAD 8mm (2)

6x 303123-K
SHIM 3x6x2

ASSEMBLED VIEW

2.0mm
2.0mm
ø 4.9mm Ball
8mm Thread
2.0mm

2x REAR LINKS

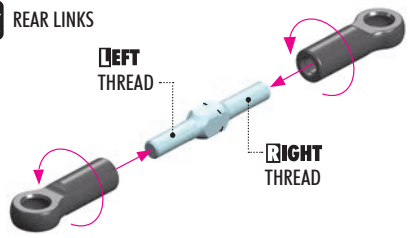

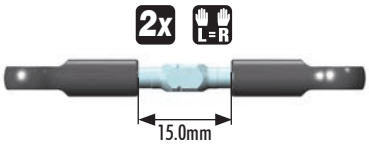

OPTION #303211-O ALU TURNBUCKLE L/R 30mm ORANGE - SWISS 7075 T6 (2)



2x 303123-K SHIM 3x6x2



VIDEO TECH TIP

REAR TOE-GAIN

2x

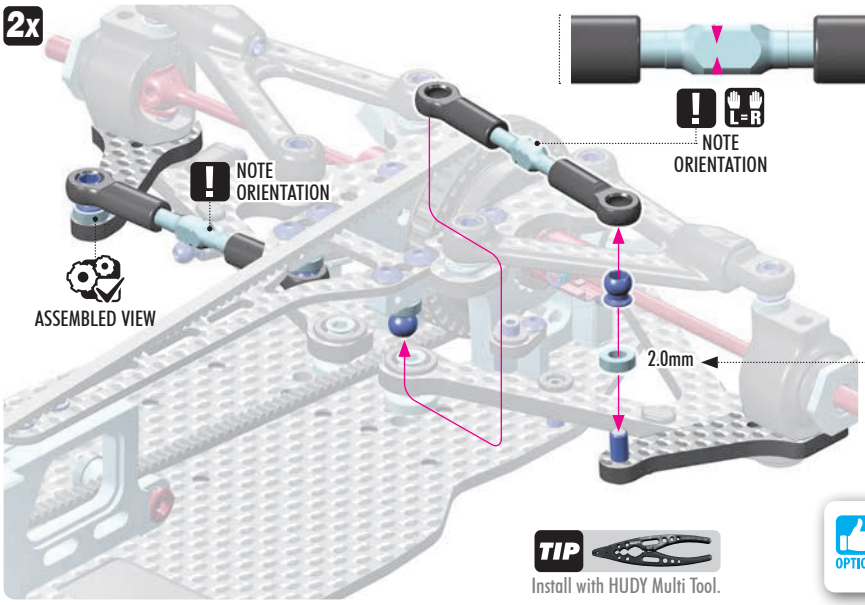

TIP Install with HUDY Multi Tool.



MORE SHIMS provides more toe-gain on compression.

LESS SHIMS provides less toe-gain (or even toe loss), on suspension compression.

MORE TOE-GAIN improves rear traction and side bite. Mainly recommended for low- to medium-traction conditions.

LESS TOE-GAIN reduces rear traction and side bite. Recommended for higher- traction conditions or tracks that require more steering.

The rear ARS outer link shim is of the same height as on X4'25.

OPTION	HUDY TITANIUM PIVOT BALL			
	#990102	D=4.9	S=3.5	OPTION



2x 303127-K SHIM 3x6x4

2x

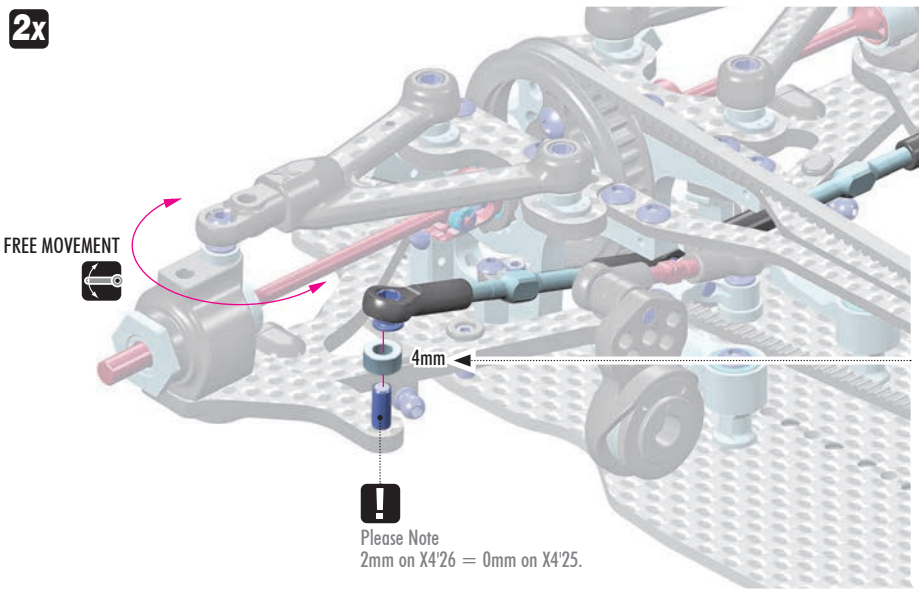



BUMP STEER ADJUSTMENT

TO DECREASE bump steer, smoothen out the steering, and reduce traction rolling: **increase the amount of shimming.**

TO INCREASE bump steer, to make the steering more aggressive, **decrease the amount of shimming.**

Decrease the amount of shimming to get more steering.

Increase the shimming if the car is difficult to drive and/or it is traction rolling.

VIDEO TECH TIP

STEERING SYSTEM

4x 930306 BB 3x6x2.5



VIDEO TECH TIP

ANTI-ROLL BARS

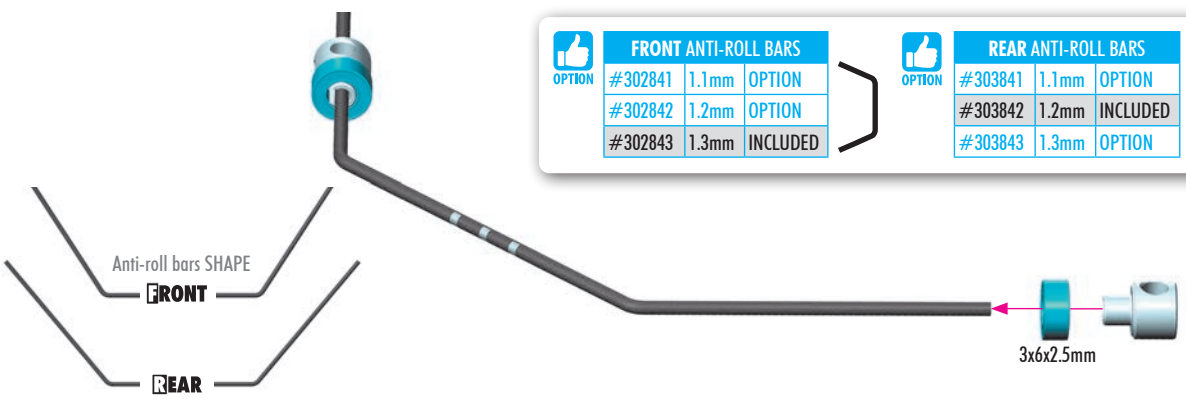

OPTION	FRONT ANTI-ROLL BARS		
	#302841	1.1mm	OPTION
	#302842	1.2mm	OPTION
	#302843	1.3mm	INCLUDED

OPTION	REAR ANTI-ROLL BARS		
	#303841	1.1mm	OPTION
	#303842	1.2mm	INCLUDED
	#303843	1.3mm	OPTION

5. FRONT & REAR SUSPENSION



TIP
Install with HUDY Multi Tool.

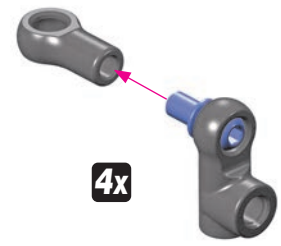

ASSEMBLED VIEW

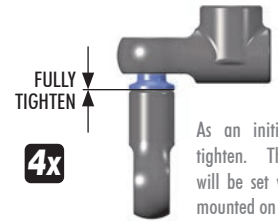

As an initial setting, fully tighten. The anti-roll-bar will be set when the wire is mounted on the car.

REAR SUSPENSION

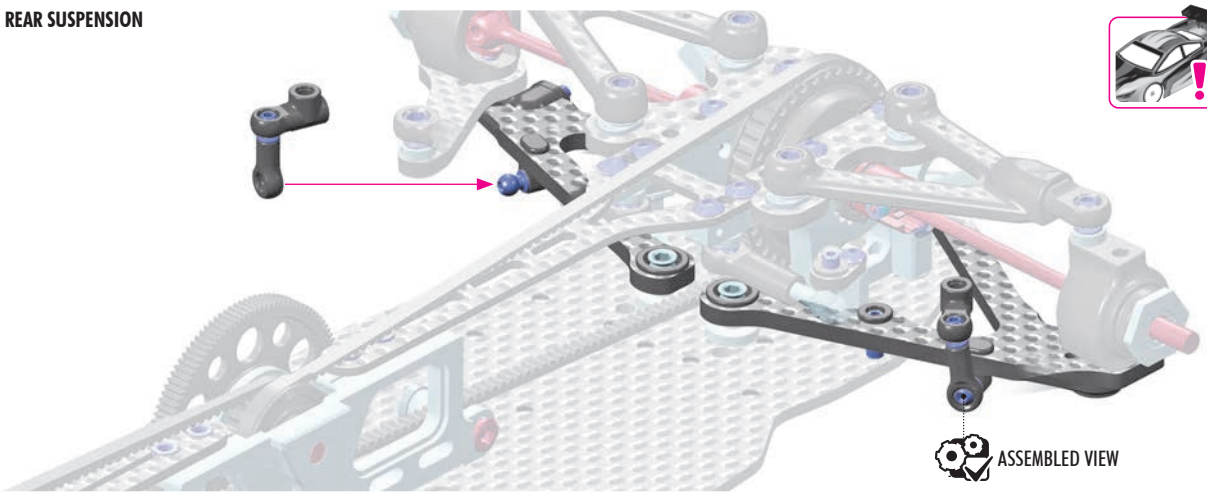

ASSEMBLED VIEW

2x 901302 SB M3x2.5

2x 901304 SB M3x4

OPTION

REAR ANTI-ROLL BARS		
#303841	1.1mm	OPTION
#303842	1.2mm	INCLUDED
#303843	1.3mm	OPTION

SOFTER rear anti-roll bar:
Generates more side traction. Mainly recommended for low-traction asphalt tracks.

STIFFER rear anti-roll bar:
Helps the car stay flatter and reduces traction rolling on high-traction surfaces.

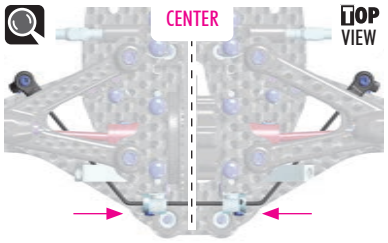

Set the bar into the CENTER, remove the play in the bushings, and tighten the set-screws fully.

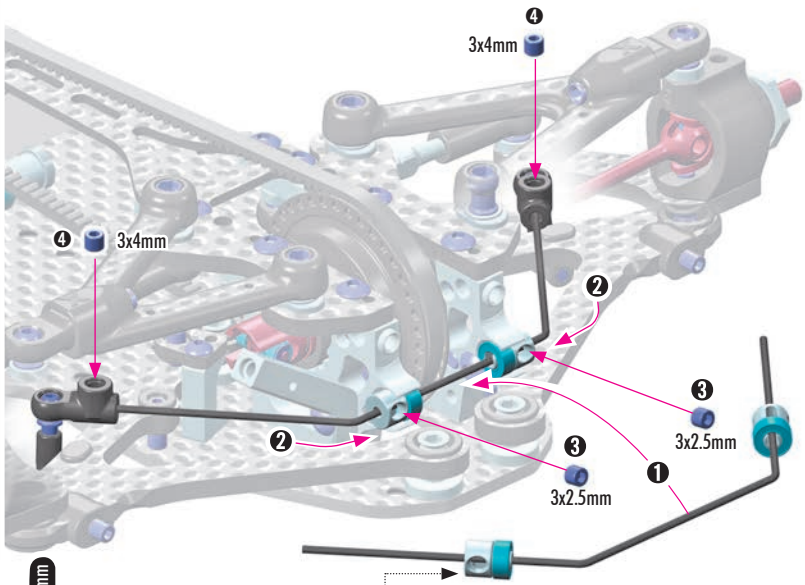

NOTE THE ORIENTATION of the alu anti-roll bar bushing. The hole for the set-screw must be in-line with bulkead cutout to allow the full movement of the anti-roll bar wire.



VIDEO TECH TIP

ANTI-ROLL BARS

ANTI-ROLL BAR ADJUSTMENT

If both sides do not respond at the same time, adjust the length of the bar holders to achieve equal L&R response.

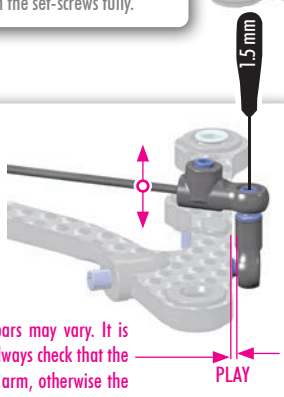

The length of the anti-roll bars may vary. It is therefore very important to always check that the ball joint does not touch the arm, otherwise the suspension will not move freely.

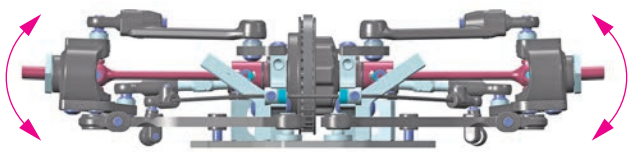

When the bars are set, verify that both sides move at the same time. If they do, the bars are set up correctly. If NOT, make sure that both downstops are the same and that the bar wire is flat.

FRONT SUSPENSION

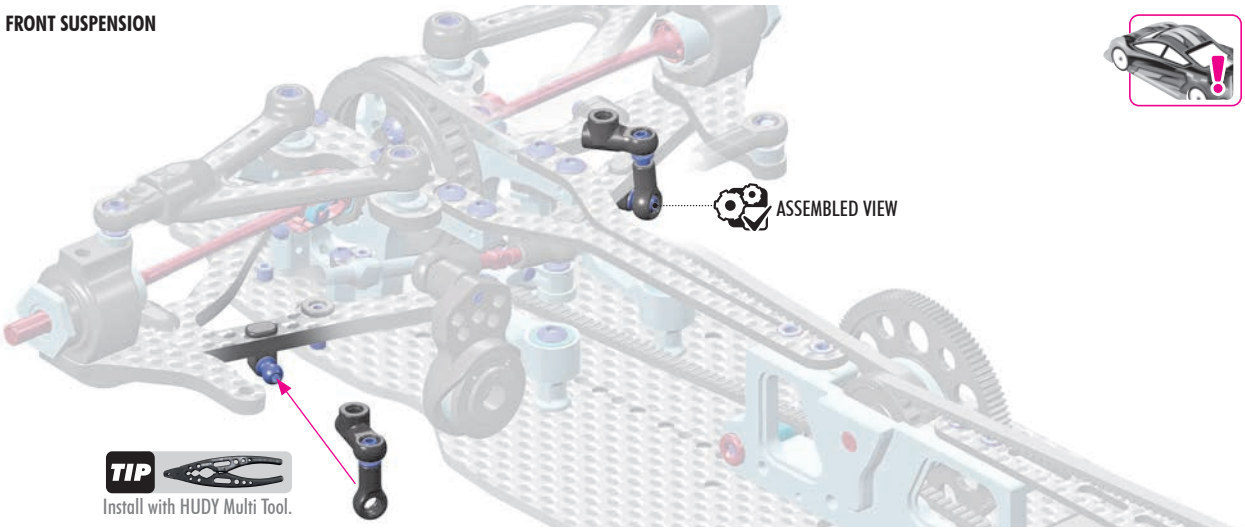

2x 901302 SB M3x2.5

2x 901304 SB M3x4

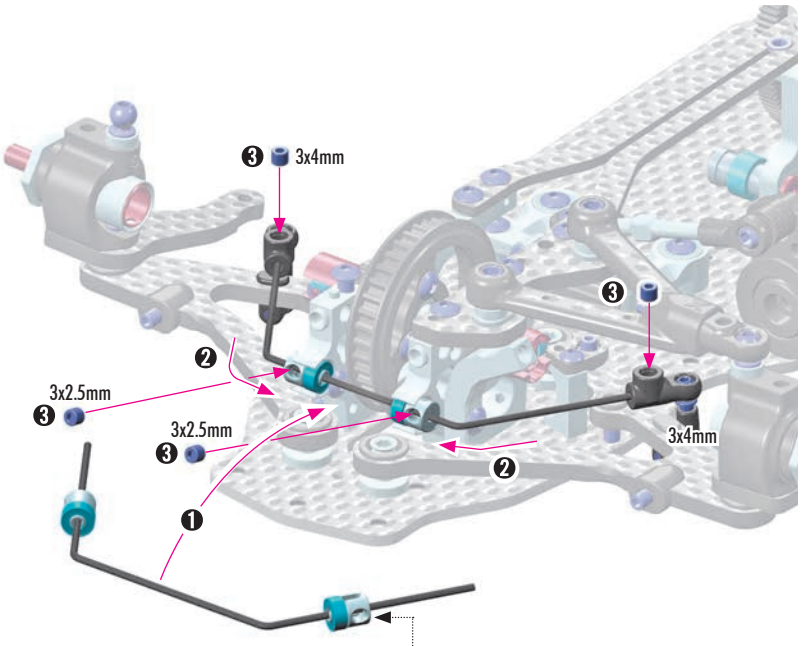

NOTE THE ORIENTATION of the alu anti-roll bar bushing. The hole for the set-screw must be in-line with bulkead cutout to allow the full movement of the anti-roll bar wire.

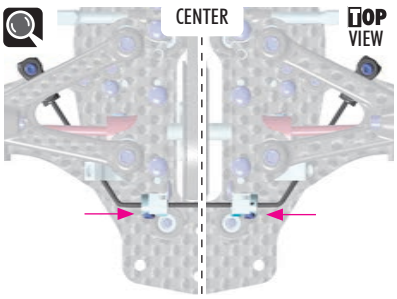

Set the bar into the CENTER, remove the play in the bushings, and tighten the set-screws fully.

IMPORTANT! Check for clearance between the steering plate and anti-roll bar. If there is contact when setting the steering angle up to the maximum 26°, ensure that the anti-roll bar is properly centered.

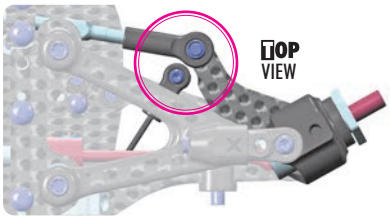

OPTION

FRONT ANTI-ROLL BARS		
#302841	1.1mm	OPTION
#302842	1.2mm	OPTION
#302843	1.3mm	INCLUDED

SOFTER front anti-roll bar:
Allows the front to roll more which provides more front traction and improves on-power steering.

STIFFER front anti-roll bar:
Makes the car initially more responsive, and helps the car stay flatter on fast direction changes. Reduces steering from mid-corner to corner exit. Mainly recommended for high-traction carpet.

ANTI-ROLL BAR ADJUSTMENT

If both sides do not respond at the same time, adjust the length of the bar holders to achieve equal L&R response.

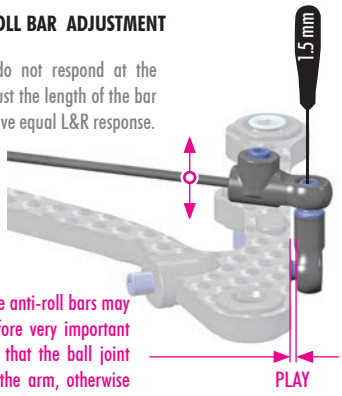

The length of the anti-roll bars may vary. It is therefore very important to always check that the ball joint does not touch the arm, otherwise the suspension will not move freely.

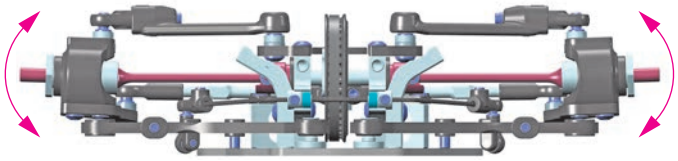

When the bars are set, verify that both sides move at the same time. If they do, the bars are set up correctly. If NOT, make sure that both downstops are the same and that the bar wire is flat.



VIDEO TECH TIP

ANTI-ROLL BARS

6. SHOCK ABSORBERS

4x

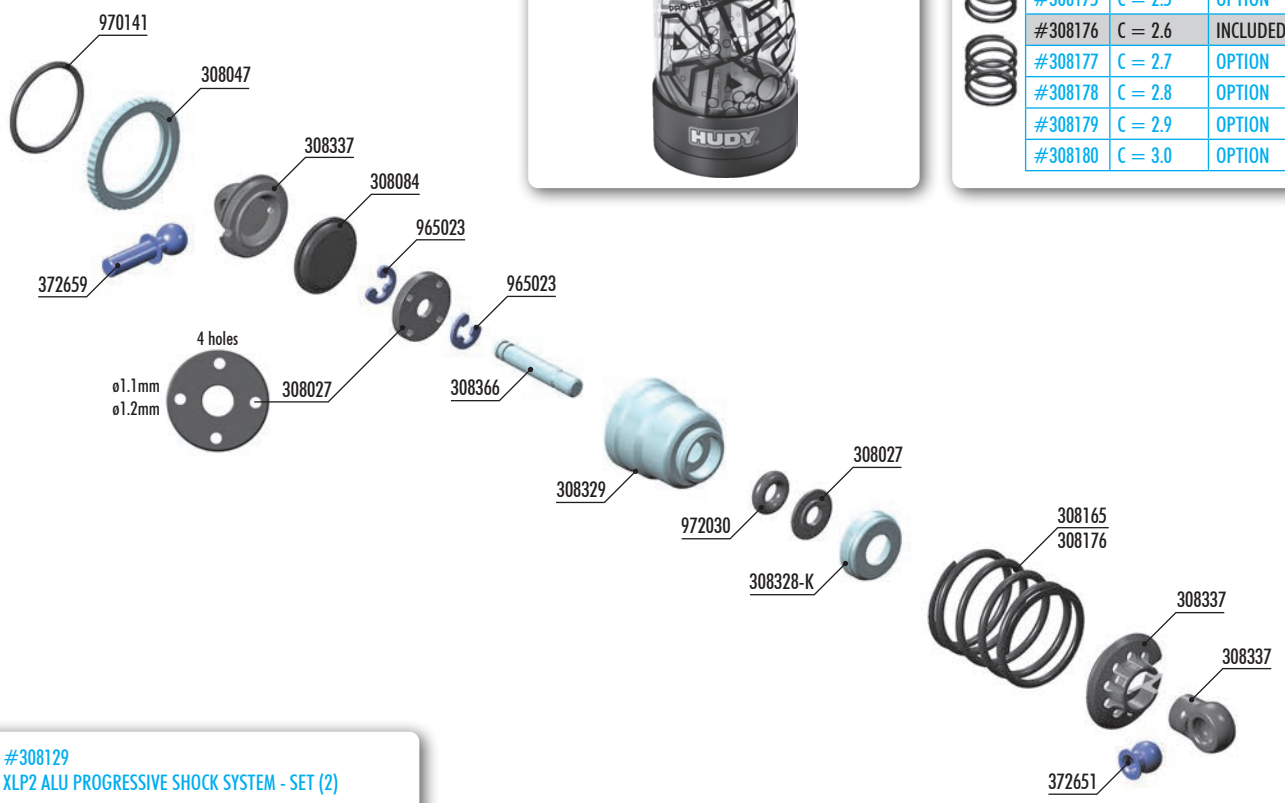

OPTION #104002 or #104003
HUDY AIR VAC – VACUUM PUMP - ON-ROAD

OPTION

XRAY SPRINGS		
#308164	C = 2.4-2.7	OPTION
#308165	C = 2.5-2.8	INCLUDED
#308166	C = 2.6-2.9	OPTION
#308175	C = 2.5	OPTION
#308176	C = 2.6	INCLUDED
#308177	C = 2.7	OPTION
#308178	C = 2.8	OPTION
#308179	C = 2.9	OPTION
#308180	C = 3.0	OPTION

OPTION #308129
XLP2 ALU PROGRESSIVE SHOCK SYSTEM - SET (2)

The progressive shock inserts improve steering characteristics. The XLP2 PSS set fits the stock XLP2 shock bodies included in the kit. Must be used with: #308026 - XLP Progressive Pistons.



OPTION #308026
XLP COMPOSITE 2-HOLE ø0.8mm PROGRESSIVE PISTON (4)



OPTION

HUDY TITANIUM PIVOT BALL			
#990102	D=4.9	S=3.5	OPTION



OPTION #308033-K
ALU XLP SHOCK SPRING RETAINING COLLAR - BLACK (4)





VIDEO TECH TIP SHOCKS & SPRINGS

BAG 06

308027	XLP COMPOSITE 4-HOLE 1.1-1.2MM PISTON (2+2)	372659	BALL END 4.9MM WITH 9MM THREAD (2)
308047	XLP2 ALU SHOCK ADJUSTABLE NUT - BLACK (2)		
308084	XLP2 SILICONE HYPER RESISTANT MEMBRANE (4)	965023	E-CLIP 2.3 (10)
308311	XLP2 ALU SHOCK ABSORBER-SET (2)	970141	O-RING 14 x 1.0 (10)
308329	XLP2 ALU SHOCK BODY (2)	972030	SILICONE O-RING 3 x 2 (10)
308328-K	XLP ALU CAP FOR SHOCK BODY - BLACK (2)		
308337	XLP2 COMPOSITE SHOCK PARTS WITH 2 HOLES	308165	XLP SPRING-SET PROGRESSIVE C=2.5-2.8 (2)
308366	XLP2 HARDENED SHOCK SHAFT (2)	308176	XLP SPRING-SET C=2.6 (2)
372651	PIVOT BALL UNIVERSAL 4.9 MM - HUDY SPRING STEEL™ (2)		

8x 965023 E 2.3

4x

INITIAL SETTING

4 holes

ø1.1mm INITIAL SETTING
ø1.2mm

Carefully remove the shock piston from the frame, and remove all excess plastic flash.

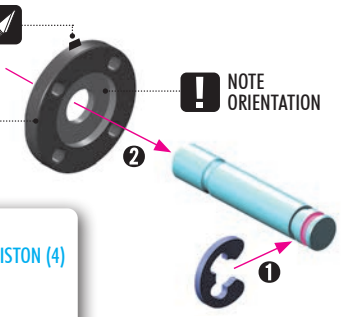

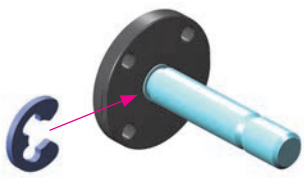



OPTION #308026
XLP COMPOSITE 2-HOLE ø0.8mm PROGRESSIVE PISTON (4)

These pistons must be used with optional:
#308129 XLP2 PROGRESSIVE SHOCK INSERTS

4x 972030
O 3x2

4x

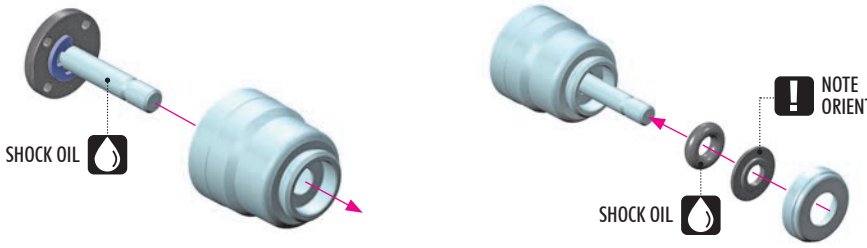

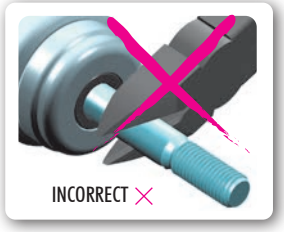

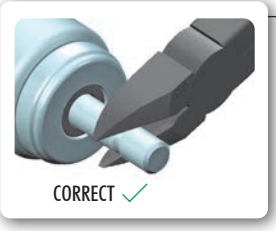

4x

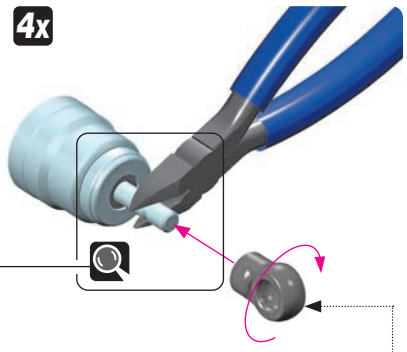

Pre-thread the ball joint using an M3 screw. TIP

Be carefull NOT to pre-thread too far, since the ball joint may split or the plastic threads may strip out.

4x The necessary shock length depends on the downstop setting. When using minimum downstop, increase the shock length.

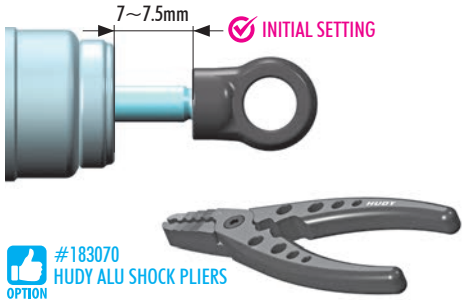

OPTION #183070
HUDY ALU SHOCK PLIERS

We recommend using HUDY shock pliers when adjusting shock length. These pliers allows super easy and comfortable shock length adjustment.



VIDEO TECH TIP

HUDY AIR-VAC SHOCK BUILD

OIL 350cSt

4x OIL

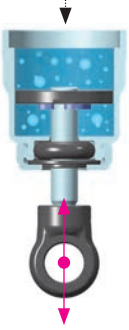

SHOCK FILLING

1. Fully extend the piston rod so the piston is at the bottom of the shock body.
2. Hold the shock upright and slightly overfill the shock body with shock oil.
3. Let the oil settle and allow air bubbles to rise to the top. Slowly move the piston up and down to allow oil into all cavities within the shock body.
4. Extend the piston rod most of the way out of the shock body. Let the shock rest for 5 minutes to allow the air bubbles to escape.
5. Add shock oil as necessary.

OPTION HUDY



SHOCK OILS (50ml)		
#106325	250cSt	OPTION
#106330	300cSt	OPTION
#106335	350cSt	INCLUDED
#106337	375cSt	OPTION
#106340	400cSt	OPTION
#106342	425cSt	OPTION
#106345	450cSt	OPTION
#106347	475cSt	OPTION
#106350	500cSt	OPTION
#106352	525cSt	OPTION
#106355	550cSt	OPTION
#106357	575cSt	OPTION
#106360	600cSt	OPTION
#106362	625cSt	OPTION
#106365	650cSt	OPTION
#106367	675cSt	OPTION
#106370	700cSt	OPTION
#106375	750cSt	OPTION
#106380	800cSt	OPTION

TIP OPTION #104002 or #104003
HUDY AIR VAC – VACUUM PUMP



To make sure that all the air is removed from the shock oil, we recommend using the HUDY Air Vac.

REBOUND ADJUSTMENT

IMPORTANT

When building the shocks with brand new membranes, some rebound may occur. After a few runs, or letting the shock settle for 24 hours, the membrane will break-in and zero rebound will be possible.

Insert shock membrane.



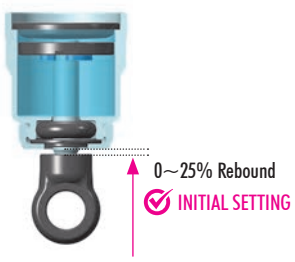

For most conditions, 0-25% rebound is recommended. This is the most forgiving and best to absorb bumps. Cornering speed is generally the best with this setting.

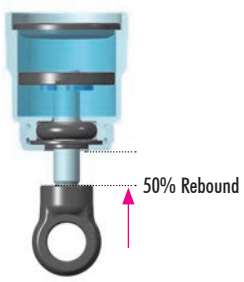

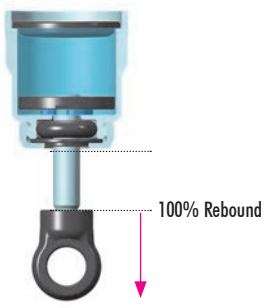

For certain low traction conditions, adding additional rebound may improve initial reaction and side bite. Direction change will be faster and may feel like the car is creating more traction. Note that higher rebound settings will make the car less stable over bumps and may increase the tendency to traction roll.

6. SHOCK ABSORBERS

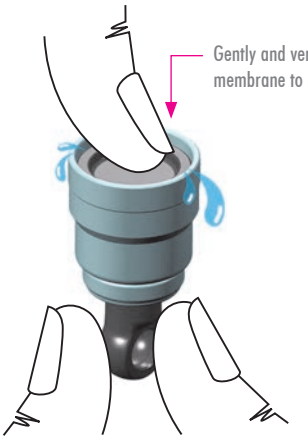



To prevent any damage to the shock body, gently tighten the shock cap. Excessive force or overtightening can cause the shock body to break or split.

CORRECT ✓

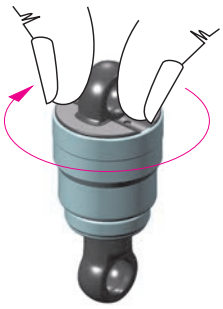

INCORRECT ✗





4x 970141
O 14x1.0

SHOCK OIL

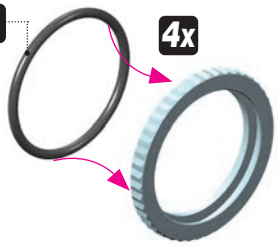

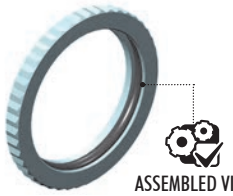

ASSEMBLED VIEW

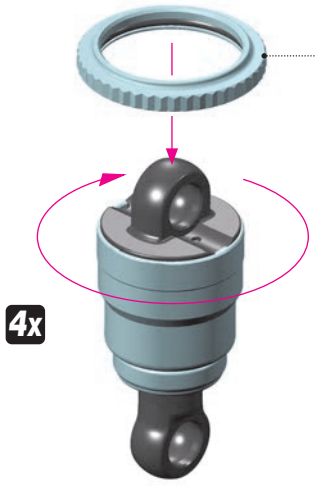

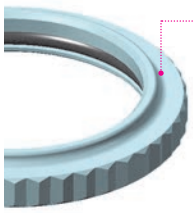

NOTE ORIENTATION

Note the orientation of the shock collar. The XLP2 shocks are designed with the spring centered on the shock body and not the spring collar with the threaded portion of the collar towards the top of the shock.



VIDEO TECH TIP

SHOCKS & SPRINGS

SHOCK LENGTH ADJUSTMENT:

It is VERY IMPORTANT that all shocks are equal length.

Fully extend the shock absorber and measure the end-to-end length; we recommend using digital calipers to give an accurate measurement. If a shock absorber is shorter or longer than others, adjust the shock length by tightening or loosening the ball joint on the shock rod.

ASSEMBLED VIEW

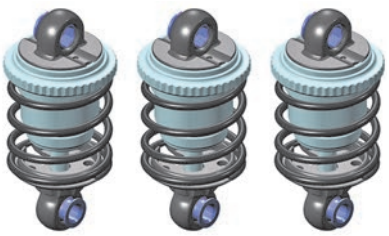

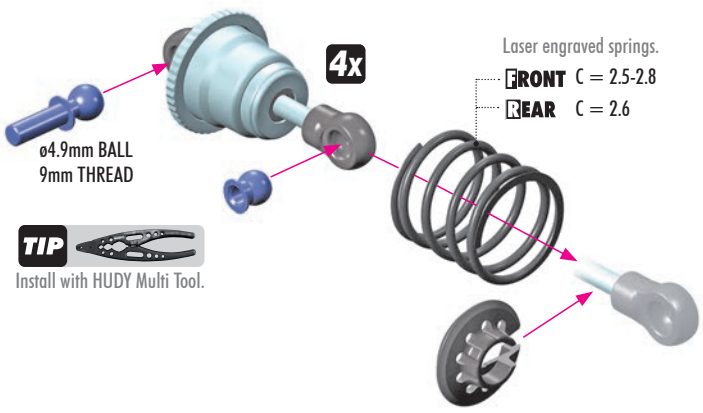

TIP

Install with HUDY Multi Tool.

OPTION

HUDY TITANIUM PIVOT BALL			
#990102	D=4.9	S=3.5	OPTION



OPTION #308033-K
ALU XLP SHOCK SPRING RETAINING COLLAR - BLACK (4)



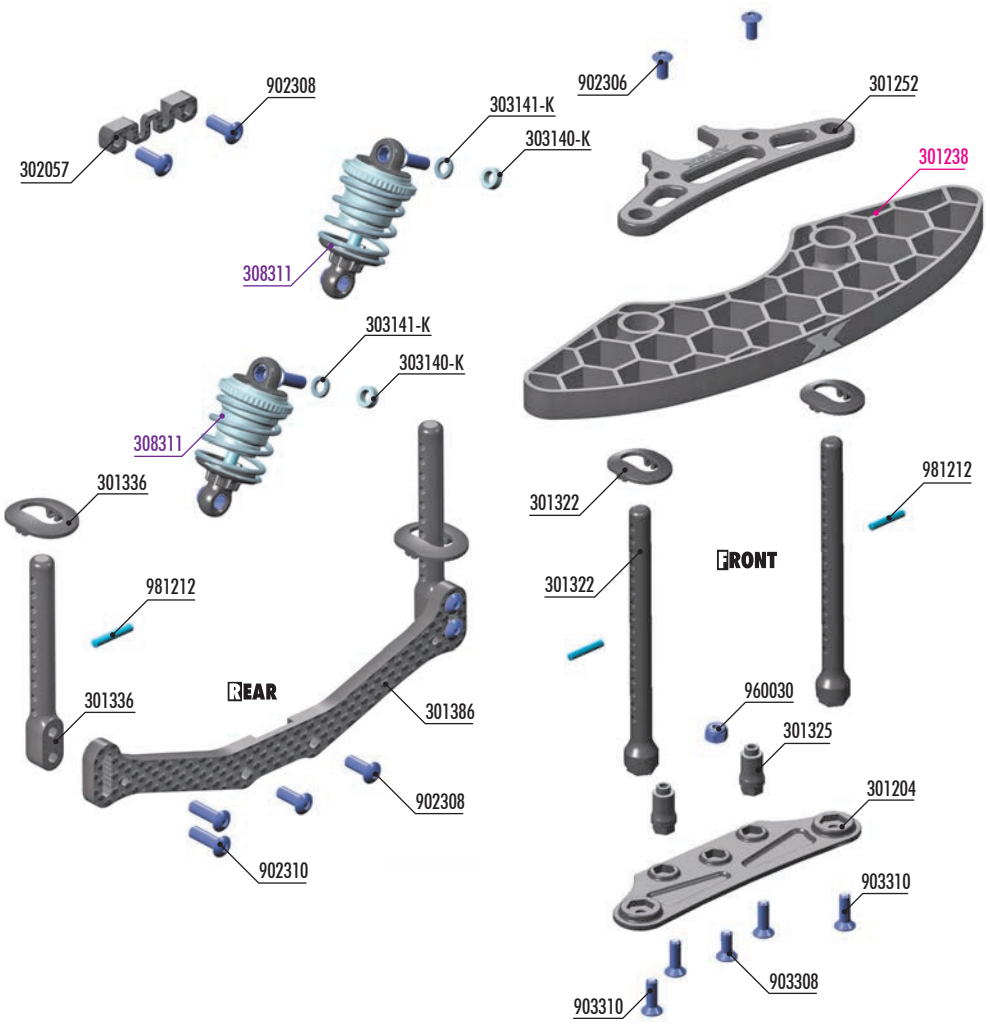

OPTION

REAR BODY MOUNT SET		
#301336	0mm	INCLUDED
#301337	+1mm	OPTION
#301338	+2mm	OPTION

OPTION

FRONT BODY MOUNT SET		
#301322	0mm	INCLUDED
#301323	+1mm	OPTION
#301324	+2mm	OPTION

OPTION #301322-H
HARD COMPOSITE HORIZONTAL REAR BODY MOUNT POST - SET

OPTION #301351-O
ALU ADJUSTABLE BODY POST STOP (2)

OPTION #301351-K
ALU ADJUSTABLE BODY POST STOP (2)

BAG 07

301204	COMPOSITE BUMPER	902306	HEX SCREW SH M3x6 (10)
301252	X4 COMPOSITE UPPER HOLDER FOR BUMPER FOR UNI BULKHEADS	902308	HEX SCREW SH M3x8 (10)
301322	FRONT BODY MOUNT SET	902310	HEX SCREW SH M3x10 (10)
301325	COMPOSITE BRACE FOR BUMPER - LOW (2)	903308	HEX SCREW SFH M3x8 (10)
301336	REAR BODY MOUNT SET	903310	HEX SCREW SFH M3x10 (10)
301386	X4 CARBON BODY POST & BODY POST HOLDER FOR UNI BULKHEADS	960030	NUT M3 (10)
302057	X4 CARBON FRONT UNI BULKHEADS BRACE - WAVE	981212	PIN 2x12 (10)
303140-K	ALU SHIM 3x5x2.0mm - BLACK (10)		
303141-K	ALU SHIM 3x5x1.0mm - BLACK (10)	301238	RUBBER BUMPER 3D
		308311	XLP2 ALU SHOCK ABSORBER-SET (2)

Numbers in parentheses ( ) refer to quantities when purchased separately.



4x 902310 SH M3x10



VIDEO TECH TIP

REAR BODY POST MOUNTING

2x REAR VERTICAL BODY MOUNTING ALTERNATIVE

L=R

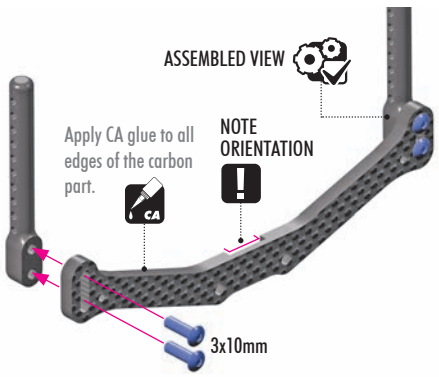

OPTION

REAR BODY MOUNT SET		
#301336	0mm	INCLUDED
#301337	+1mm	OPTION
#301338	+2mm	OPTION

REAR HORIZONTAL BODY MOUNTING ALTERNATIVE

OPTION

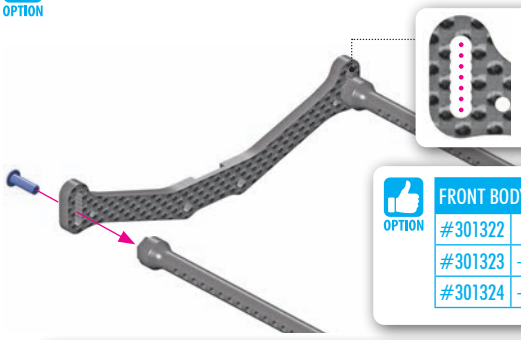

The carbon body post holder has 7 POSITIONS, spaced 1.1mm between each, for precise and easy adjustment.

OPTION

FRONT BODY MOUNT SET		
#301322	0mm	OPTION
#301323	+1mm	OPTION
#301324	+2mm	OPTION

OPTION #301322-H
HARD COMPOSITE HORIZONTAL REAR BODY MOUNT POST - SET

Optional HARD posts eliminates the flex of the horizontal mounting. Use these posts only for horizontal body mounting.

Optional horizontal rear body mounting has shown benefits on medium to high traction conditions, especially on technical tracks, by improving directional changes, steering response and rotation. Note that rear traction is also reduced, so may be useful in Stock or Super Stock spec class racing.

7. FRONT & REAR ASSEMBLY

2x 902308 SH M3x8

2x 981212 P 2x12



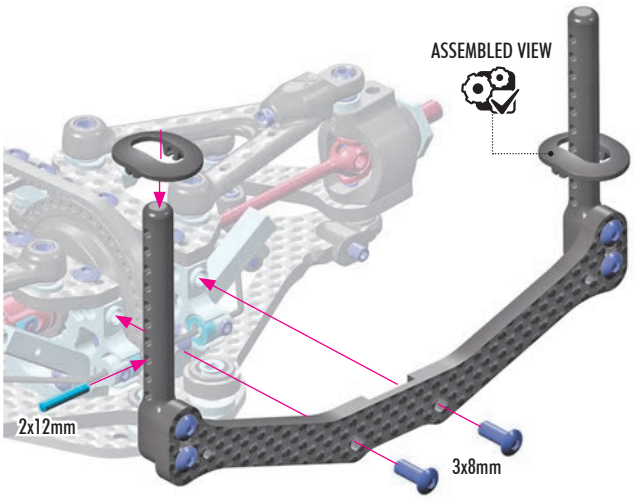

OPTION #301351-0 ALU ADJUSTABLE BODY POST STOP (2)



OPTION #301351-K ALU ADJUSTABLE BODY POST STOP (2)



Very handy, easily externally adjustable body post made from Swiss 7075 T6 aluminum. Allows for adjustment of body height by 3mm without needing to change the position on the body post.

The second mounting position on the body post holder will shift the post locations in between the standard 1.1mm body post spacing, creating very precise adjustment of the horizontal or vertical rear body posts.



Using the upper position on the body post holder will raise the posts to the heights required for VTA bodies

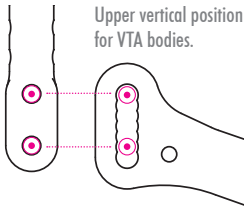

2x 303140-K SHIM 3x5x2

2x 303141-K SHIM 3x5x1



VIDEO TECH TIP

SHOCK SHIMMING TUTORIAL

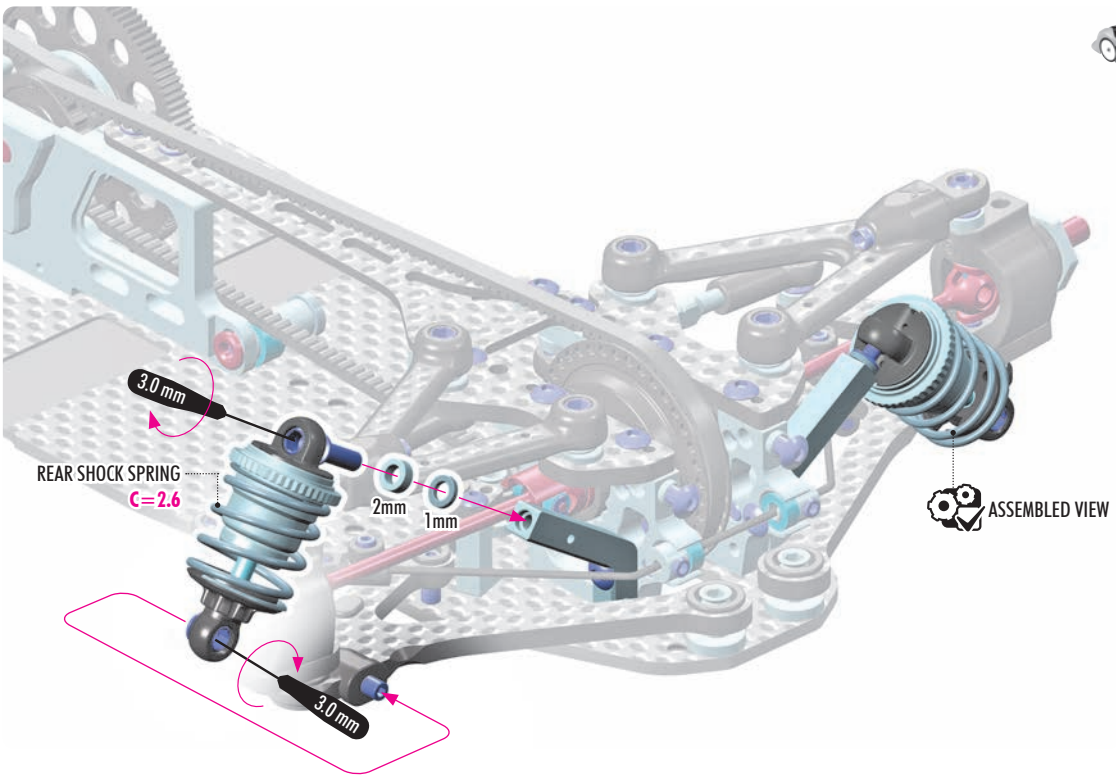

1mm on X4'25 = 0mm on X4'26.

INITIAL SETTING
3mm shims - CARPET TRACKS

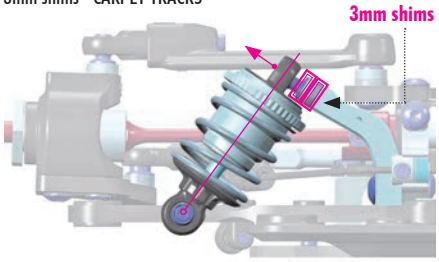

INITIAL SETTING
1mm shims - ASPHALT TRACKS

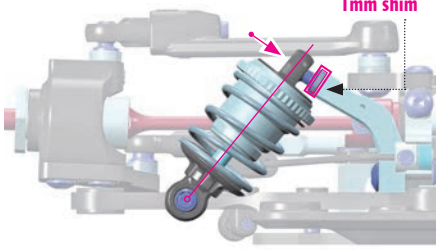

1x 903308 SFH M3x8

4x 903310 SFH M3x10

1x 960030 N M3

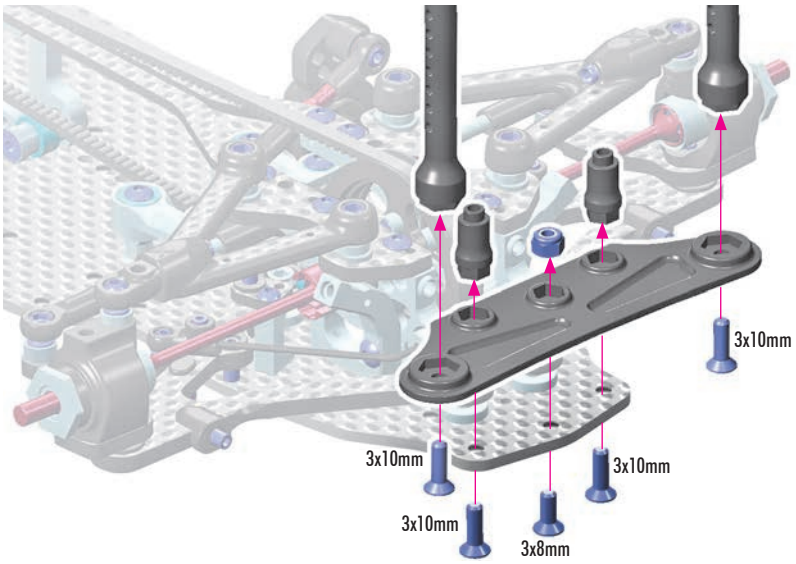

OPTION

FRONT BODY MOUNT SET		
#301322	0mm	INCLUDED
#301323	+1mm	OPTION
#301324	+2mm	OPTION

2x 902306 SH M3x6

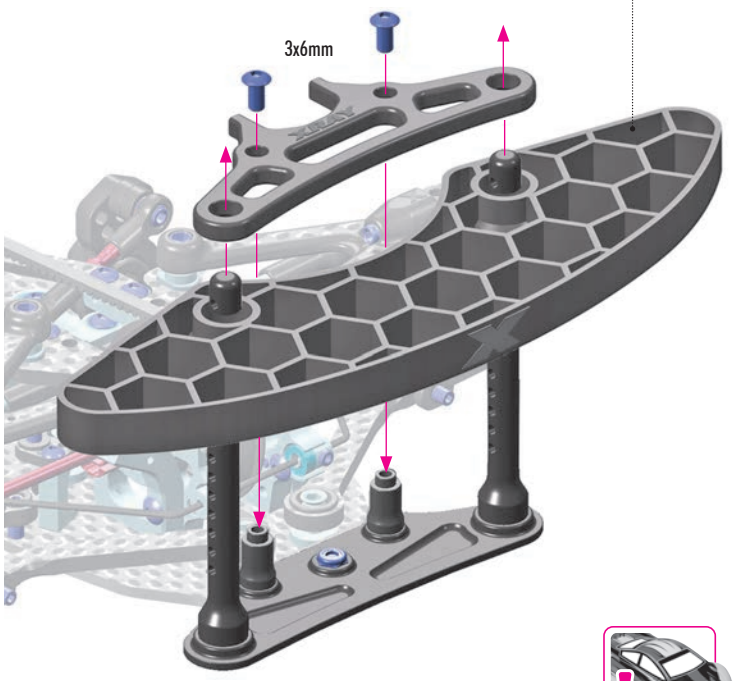

NOTE
ORIENTATION
when inserting the bumper

NOTE
ORIENTATION

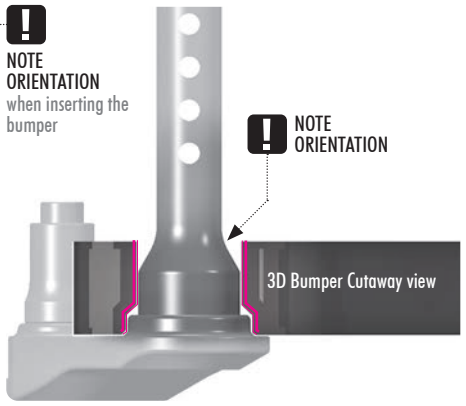

OPTION #301253
X4 CARBON UPPER HOLDER FOR BUMPER FOR UNI BULKHEADS

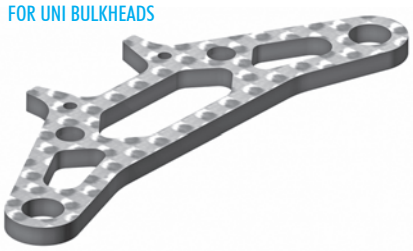

2x 981212 P 2x12

VIDEO TECH TIP

FRONT BODY UPSTOP SYSTEM

2x L=R

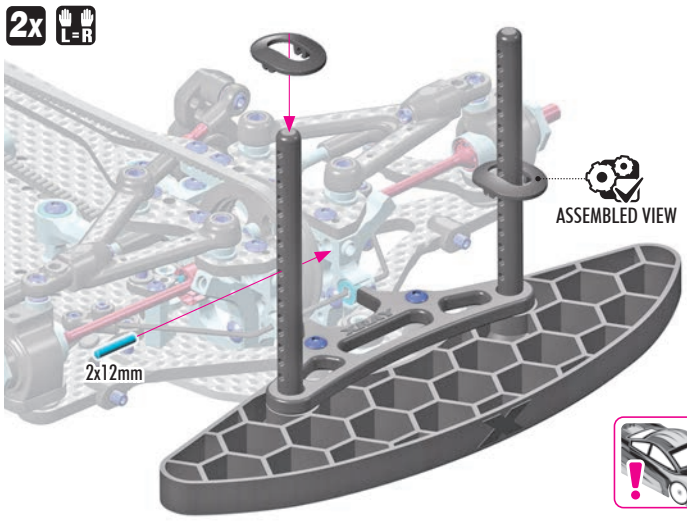

ASSEMBLED VIEW

OPTION #301351-0
ALU ADJUSTABLE BODY POST STOP (2)



OPTION #301351-K
ALU ADJUSTABLE BODY POST STOP (2)



Very handy, easily externally adjustable body post made from Swiss 7075 T6 aluminum. Allows for adjustment of body height by 3mm without needing to change the position on the body post.

OPTION

FRONT BODY MOUNT SET		
#301322	0mm	INCLUDED
#301323	+1mm	OPTION
#301324	+2mm	OPTION

7. FRONT & REAR ASSEMBLY

2x 303140-K
SHIM 3x5x2

2x 303141-K
SHIM 3x5x1

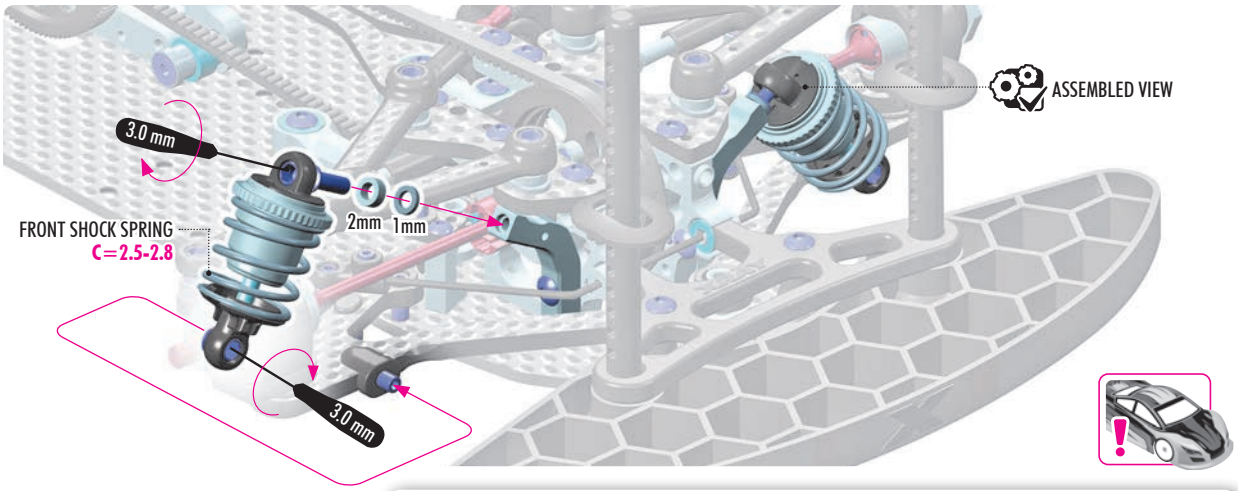



VIDEO TECH TIP

SHOCKS & SPRINGS

1mm on X4'25 = 0mm on X4'26.

INITIAL SETTING
3mm shims - CARPET TRACKS

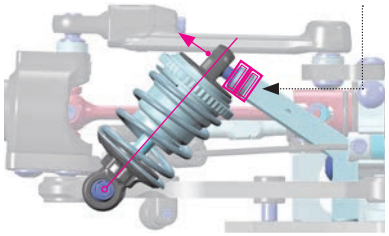

INITIAL SETTING
1mm shims - ASPHALT TRACKS

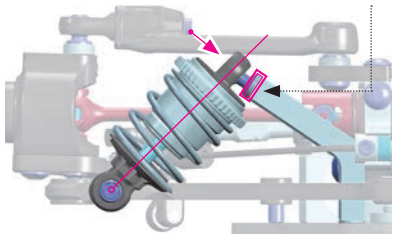

2x 902308
SH M3x8

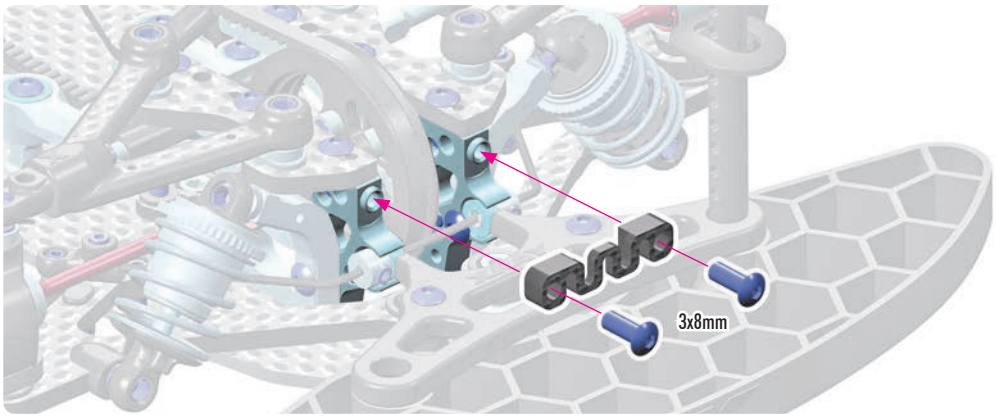

FRONT BULKHEAD BRACE

FRONT SUSPENSION FLEX WITH WAVE BRACE

The wave shaped brace can mount directly to the front bulkheads or to the front top deck, reducing front suspension flex in different areas with each configuration resulting in unique handling characteristics.

2x 902308
SH M3x8

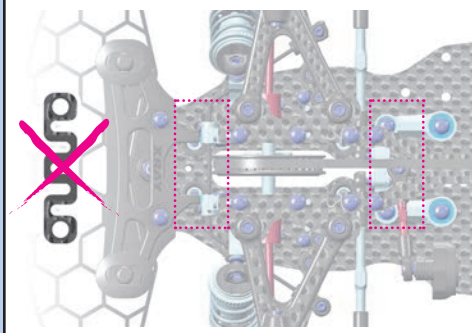

No bulkhead or top deck brace.

The most forgiving but least precise driving experience. Maximum bulkhead and top deck flex makes the car less responsive and less sensitive to steering input.

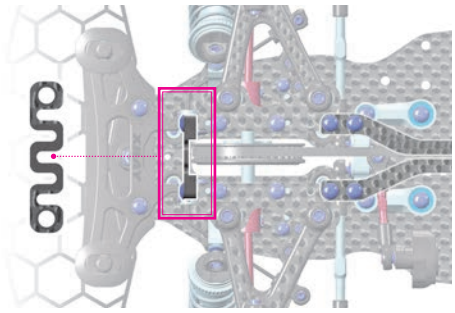

Wave shape on front bulkhead. INITIAL SETTING

Neutral corner entry feel with consistent grip through an entire run with optimal front tire temperature management. A balance between initial and mid-corner steering. Best all-around setting, especially for fast and flowing tracks.

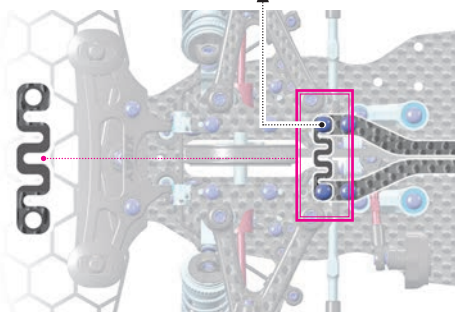

Wave shape on most forward point of front top deck.

Maximum initial response and turn-in, making the car more aggressive but with increased front tire temps and reduced mid-corner steering. Best option for technical tracks with tight corners. M3x8mm screw (INCLUDED) for mounting brace onto the top deck.

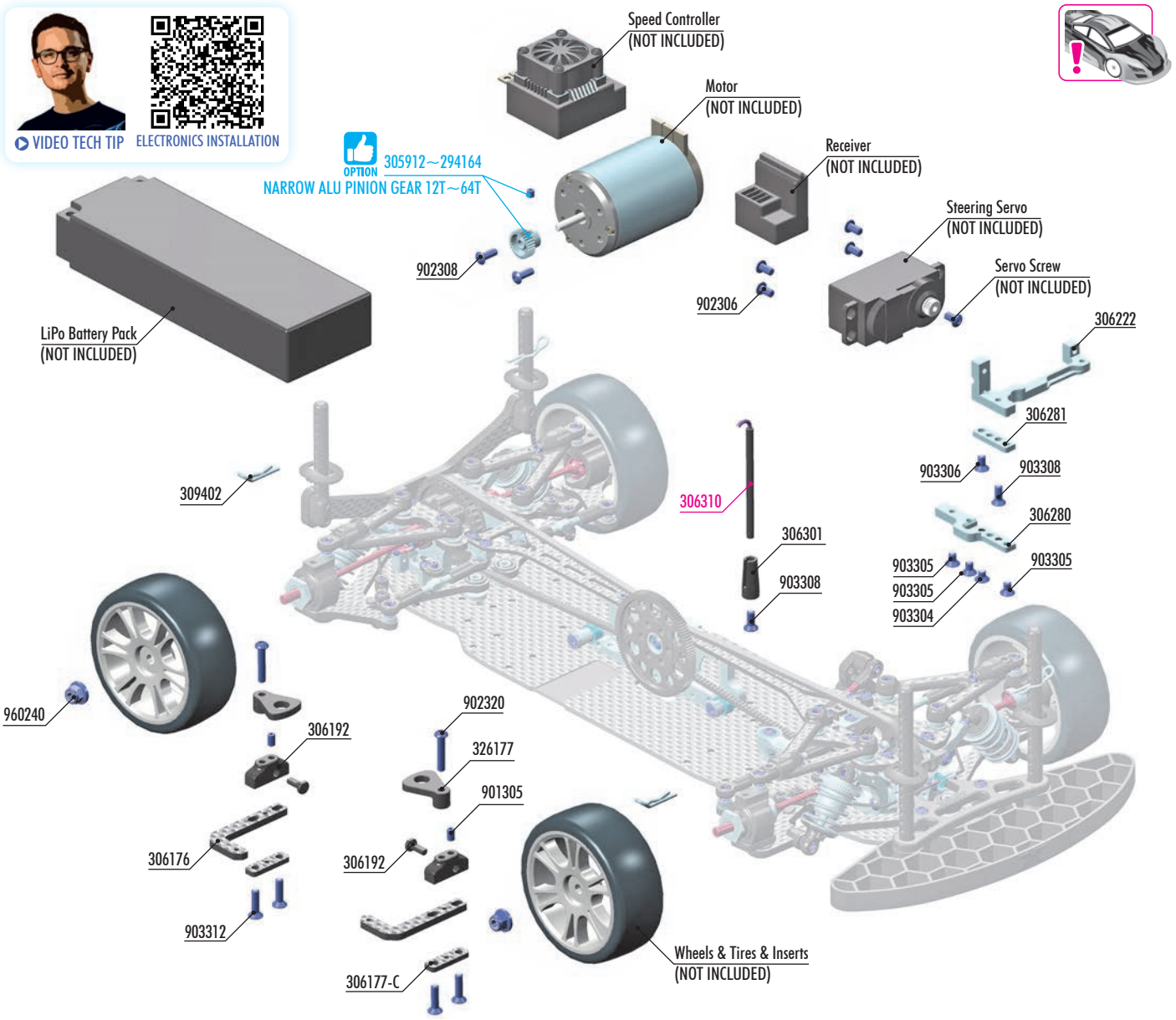

OPTION HUDY ALU RC FAN 30mm & 40mm (on page 43)



OPTION #306410 ALU FAN MOUNT



OPTION #107870 HUDY FIBRE-REINFORCED TAPE



OPTION

ALU REAR WING SHIM			
#353561	SILVER	XRAY	OPTION
#293561	SILVER	HUDY	OPTION
#293561-0	ORANGE	HUDY	OPTION

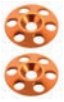

OPTION TUNGSTEN & STAINLESS STEEL WEIGHTS (on page 43 and 46)



OPTION #309861 SHORT LIPO BALANCING CHASSIS WEIGHT 40g (2)



BAG 07

306176	CARBON BATTERY ADJ. WIDTH PLATE (2)
306177-C	CARBON BATTERY PLATE SHIM - DEEPER COUNTERSUNK (2)
306192	COMPOSITE ADJUSTABLE BATTERY HOLDER & BACKSTOP (2+2)
306222	ALU SERVO MOUNT - BLACK - ONE-PIECE - SWISS 7075 T6
306280	ALU SERVO HOLDER - REARWARD - SWISS 7075 T6
306281	ALU SERVO HOLDER - FORWARD - SWISS 7075 T6
306301	ANTENNA MOUNT - THIN
309402	BODY CLIP FOR 6mm BODY POST (4)
326177	COMPOSITE BATTERY CLAMP (2)
901305	HEX SCREW SB M3x5 (10)
902306	HEX SCREW SH M3x6 (10)
902308	HEX SCREW SH M3x8 (10)
902320	HEX SCREW SH M3x20 (10)
903304	HEX SCREW SFH M3x4 (10)
903305	HEX SCREW SFH M3x5 (10)
903306	HEX SCREW SFH M3x6 (10)
903308	HEX SCREW SFH M3x8 (10)
903312	HEX SCREW SFH M3x12 (10)
960240	NUT M4 WITH SERRATED FLANGE (10)

306310 ANTENNA (2)
305912~294164 NARROW ALU PINION GEAR 12T~64T (OPTION)

Numbers in parentheses ( ) refer to quantities when purchased separately.

3x 902306 SH M3x6



VIDEO TECH TIP

STEERING SYSTEM

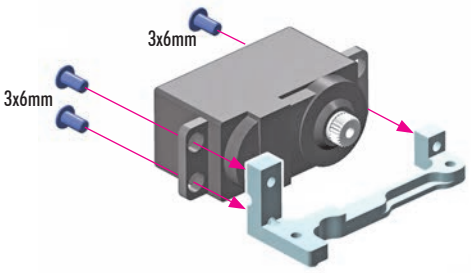

SERVO MOUNT ASSEMBLY ALTERNATIVES

There are 3 alternatives how to mount the servo mount to the chassis and each of them provide different chassis flex and driving characteristics.

ALTERNATIVE 1

SERVO MOUNT ASSEMBLY - **FORWARD ALTERNATIVE**

1x 903306 SFH M3x6

1x 903308 SFH M3x8

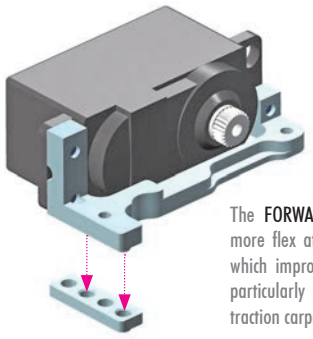

The **FORWARD POSITION** allows for more flex at the front of the chassis, which improves front traction. This is particularly useful on low to medium traction carpet as well as asphalt.

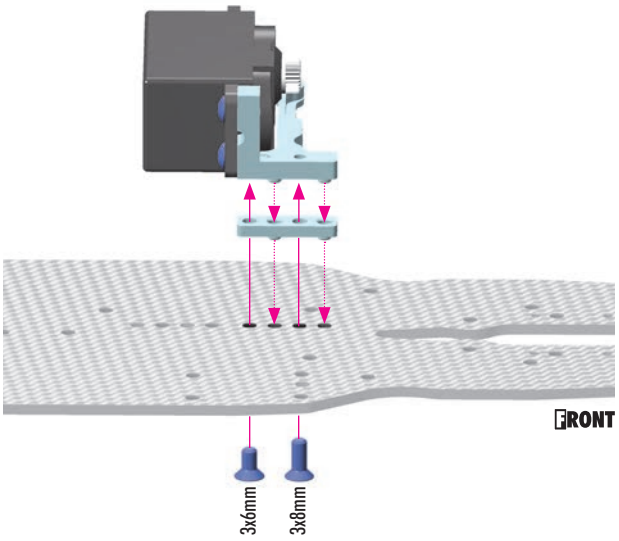

ALTERNATIVE 2

SERVO MOUNT ASSEMBLY - **REARWARD ALTERNATIVE**

1x 903304 SFH M3x4

3x 903305 SFH M3x5

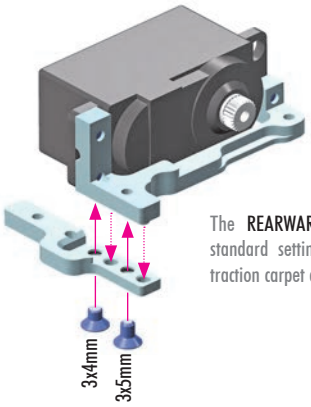

The **REARWARD POSITION** is a good standard setting recommended for high traction carpet conditions.

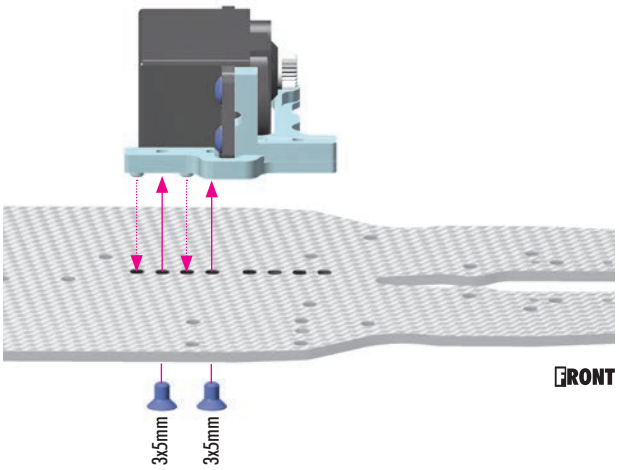

ALTERNATIVE 3

SERVO MOUNT ASSEMBLY - **STIFF ALTERNATIVE**

2x 903305 SFH M3x5

1x 903306 SFH M3x6

1x 903308 SFH M3x8

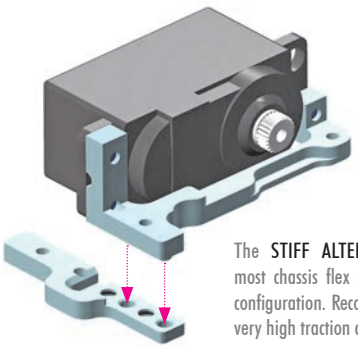

The **STIFF ALTERNATIVE** removes the most chassis flex and is the most stable configuration. Recommended for high and very high traction conditions.

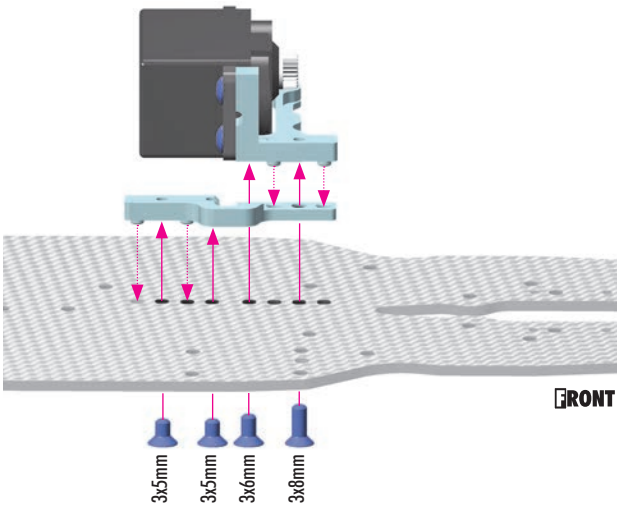

1x 903308 SFH M3x8



VIDEO TECH TIP

WEIGHT BALANCE

ELECTRONICS INSTALLATION



Feed the receiver wire into the antenna tube.

Receiver (NOT INCLUDED)



CA GLUE

NOTE: If the antenna tube does NOT hold the antenna properly, apply a small drop of the CA glue to the outside end of the antenna tube while inserting it into the holder. Make sure NOT to apply glue to the inside of the antenna tube, or the antenna wire will get permanently stuck.

Speed Controller (NOT INCLUDED)

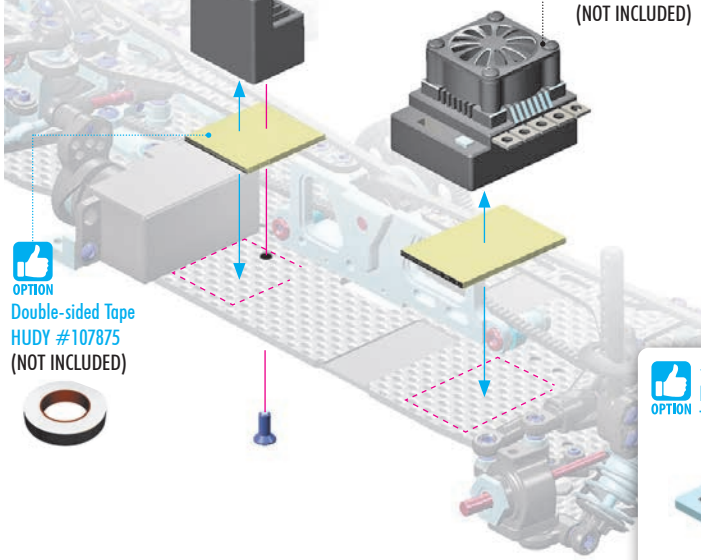

OPTION

Double-sided Tape HUDY #107875 (NOT INCLUDED)

IMPORTANT!

When installing the motor, ensure the speed controller wire can move freely to avoid chassis tweak and potential damage to the speed controller wire.

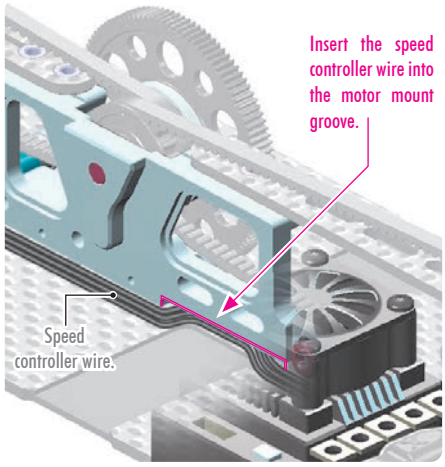

OPTION #293086 HUDY PURE TUNGSTEN WEIGHT THIN 15g - (24.5x24.5mm)

OPTION #293087 HUDY PURE TUNGSTEN WEIGHT THIN 20g - (31x26mm)



For perfect left-to-right balance, we recommend using HUDY pure tungsten weights under your electronics.

2x 902308 SH M3x8

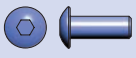

OPTION #293101 HUDY ALU RC FAN 30mm SIDE MOUNT 2 HOLE



OPTION #306410 ALU FAN MOUNT

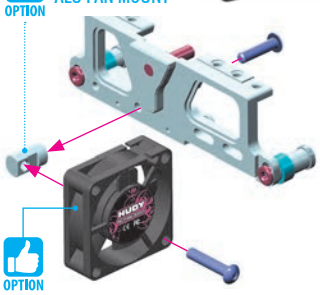

OPTION

#293110 HUDY BRUSHLESS RC FAN 30mm WITH EXTERNAL SOLDERING TABS
#293111 HUDY BRUSHLESS RC FAN 40mm WITH EXTERNAL SOLDERING TABS
#293112 HUDY BRUSHLESS RC FAN 30mm WITH INTERNAL SOLDERING TABS
#293113 HUDY BRUSHLESS RC FAN 40mm WITH INTERNAL SOLDERING TABS

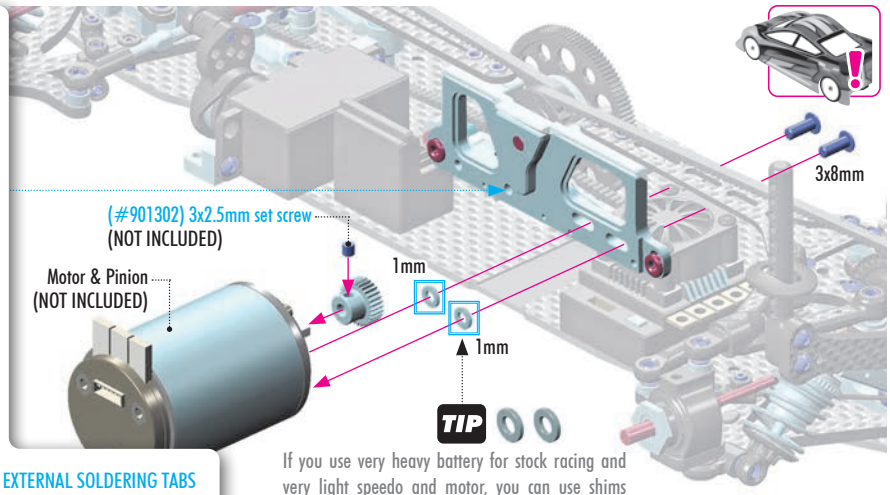

TIP

If you use very heavy battery for stock racing and very light speedo and motor, you can use shims between motor and motor mount to move the weight more outside on the motor side which can help to have same weight balance left and right. You can use shims #303122 (3x6x1mm) NOT INCLUDED in kit.

GEAR MESH

Adjust the motor so the pinion meshes with the spur gear properly. Make sure the gear mesh is NOT too tight.

There should be a small amount of play between the teeth of the pinion gear and the spur gear.

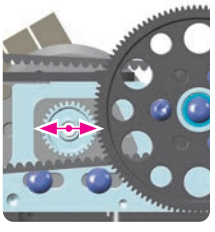

OPTION

ALU PINION GEARS (48P)		ALU PINION GEARS (64P)			
#305912 12T / 48P	#294024 24T / 48P	#305968 18T / 64P	#294130 30T / 64P	#294142 42T / 64P	#294154 54T / 64P
#305913 13T / 48P	#294025 25T / 48P	#305969 19T / 64P	#294131 31T / 64P	#294143 43T / 64P	#294155 55T / 64P
#305914 14T / 48P	#294026 26T / 48P	#305970 20T / 64P	#294132 32T / 64P	#294144 44T / 64P	#294156 56T / 64P
#305915 15T / 48P	#305927 27T / 48P	#305971 21T / 64P	#294133 33T / 64P	#294145 45T / 64P	#294157 57T / 64P
#305916 16T / 48P	#305928 28T / 48P	#305972 22T / 64P	#294134 34T / 64P	#294146 46T / 64P	#294158 58T / 64P
#294017 17T / 48P	#305929 29T / 48P	#294123 23T / 64P	#294135 35T / 64P	#294147 47T / 64P	#294159 59T / 64P
#294018 18T / 48P	#294030 30T / 48P	#294124 24T / 64P	#294136 36T / 64P	#294148 48T / 64P	#294160 60T / 64P
#294019 19T / 48P	#305931 31T / 48P	#294125 25T / 64P	#294137 37T / 64P	#294149 49T / 64P	#294162 62T / 64P
#294020 20T / 48P	#305932 32T / 48P	#294126 26T / 64P	#294138 38T / 64P	#294150 50T / 64P	#294164 64T / 64P
#294021 21T / 48P	#294033 33T / 48P	#294127 27T / 64P	#294139 39T / 64P	#294151 51T / 64P	
#294022 22T / 48P	#305934 34T / 48P	#294128 28T / 64P	#294140 40T / 64P	#294152 52T / 64P	
#294023 23T / 48P	#294035 35T / 48P	#294129 29T / 64P	#294141 41T / 64P	#294153 53T / 64P	



US SPEC CLASS

FINAL DRIVE RATIO - GEARING CHART

Spur : Pinion * 1.9 = FDR

PINION GEARS 64P		SPUR GEARS 64P															
		-	-	-	-	-	#305860	#305862	-	#305866	#305869	#305870	-	#305874	#305876	#305878	#305880
		80T	82T	84T	86T	88T	90T	92T	94T	96T	99T	100T	102T	104T	106T	108T	110T
#305970	20T														10.07	10.26	10.45
#305971	21T														9.59	9.77	9.95
#305972	22T													8.98	9.15	9.33	9.50
#305973	23T													8.59	8.76	8.92	9.09
#305974	24T												8.08	8.23	8.39	8.55	8.71
#305975	25T												7.75	7.90	8.06	8.21	8.36
#294126	26T											7.31	7.45	7.60	7.75	7.89	8.04
#294127	27T											7.04	7.18	7.32	7.46	7.60	7.74
#294128	28T										6.72	6.79	6.92	7.06	7.19	7.33	7.46
#294129	29T										6.49	6.55	6.68	6.81	6.94	7.08	7.21
#294130	30T									6.08	6.27	6.33	6.46	6.59	6.71	6.84	6.97
#294131	31T									5.88	6.07	6.13	6.25	6.37	6.50	6.62	6.74
#294132	32T								5.58	5.70	5.88	5.94	6.06	6.18	6.29	6.41	6.53
#294133	33T								5.41	5.53	5.70	5.76	5.87	5.99	6.10	6.22	6.33
#305984	34T							5.14	5.25	5.36	5.53	5.59	5.70	5.81	5.92	6.04	6.15
#305985	35T							4.99	5.10	5.21	5.37	5.43	5.54	5.65	5.75	5.86	5.97
#294136	36T						4.75	4.86	4.96	5.07	5.23	5.28	5.38	5.49	5.59	5.70	5.81
#294137	37T						4.62	4.72	4.83	4.93	5.08	5.14	5.24	5.34	5.44	5.55	5.65
#294138	38T					4.40	4.50	4.60	4.70	4.80	4.95	5.00	5.10	5.20	5.30	5.40	
#294139	39T					4.29	4.38	4.48	4.58	4.68	4.82	4.87	4.97	5.07	5.16	5.26	
#294140	40T				4.09	4.18	4.28	4.37	4.47	4.56	4.70	4.75	4.85	4.94	5.04		
#294141	41T				3.99	4.08	4.17	4.26	4.36	4.45	4.59	4.63	4.73	4.82	4.91		
#294142	42T			3.80	3.89	3.98	4.07	4.16	4.25	4.34	4.48	4.52	4.61	4.70			
#294143	43T			3.71	3.80	3.89	3.98	4.07	4.15	4.24	4.37	4.42	4.51	4.60			
#294144	44T		3.54	3.63	3.71	3.80	3.89	3.97	4.06	4.15	4.28	4.32	4.40				
#294145	45T		3.46	3.55	3.63	3.72	3.80	3.88	3.97	4.05	4.18	4.22	4.31				
#294146	46T	3.30	3.39	3.47	3.55	3.63	3.72	3.80	3.88	3.97	4.09	4.13					
#294147	47T	3.23	3.31	3.40	3.48	3.56	3.64	3.72	3.80	3.88	4.00	4.04					
#294148	48T	3.17	3.25	3.33	3.40	3.48	3.56	3.64	3.72	3.80	3.92						
#294149	49T	3.10	3.18	3.26	3.33	3.41	3.49	3.57	3.64	3.72	3.84						
#294150	50T	3.04	3.12	3.19	3.27	3.34	3.42	3.50	3.57	3.65							
#294151	51T	2.98	3.05	3.13	3.20	3.28	3.35	3.43	3.50	3.58							
#294152	52T	2.92	3.00	3.07	3.14	3.22	3.29	3.36	3.43								
#294153	53T	2.87	2.94	3.01	3.08	3.15	3.23	3.30	3.37								
#294154	54T	2.81	2.89	2.96	3.03	3.10	3.17	3.24									
#294155	55T	2.76	2.83	2.90	2.97	3.04	3.11	3.18									
#294156	56T	2.71	2.78	2.85	2.92	2.99	3.05										

CLASS

- 21.5T TC
- 21.5T / 25.5T OVERLAP
- 25.5T VTA
- US-GT / VTA OVERLAP
- US-GT
- NOT USABLE



VIDEO TECH TIP

WEIGHT BALANCE

OPTION

OPTIONAL WEIGHTS

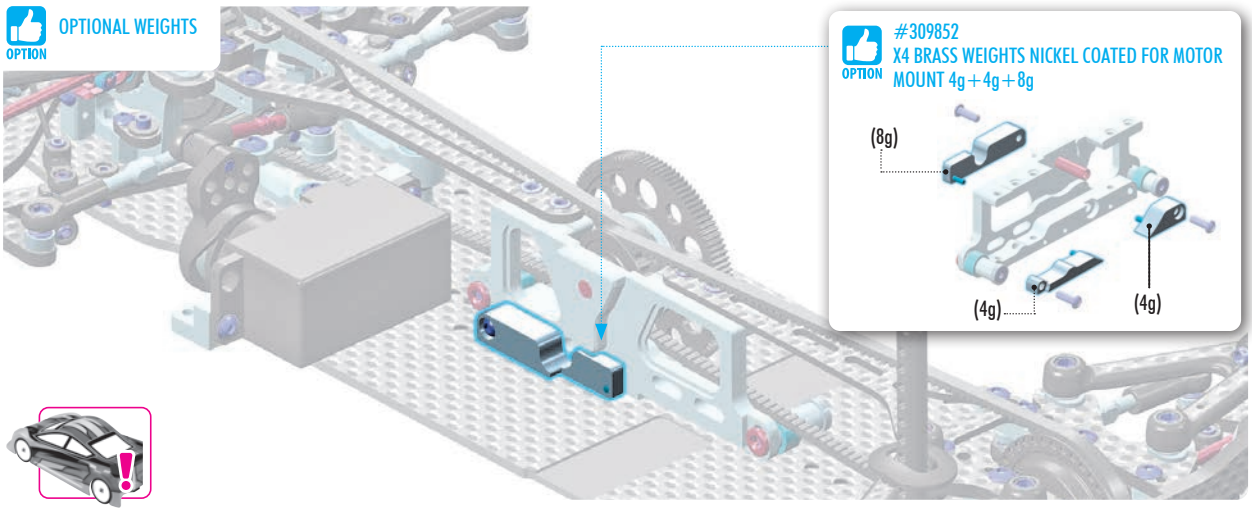

OPTION

#309852
X4 BRASS WEIGHTS NICKEL COATED FOR MOTOR MOUNT 4g+4g+8g

2x 901305 SB M3x5



2x 902320 SH M3x20

VIDEO TECH TIP

BATTERY MOUNTING SYSTEM

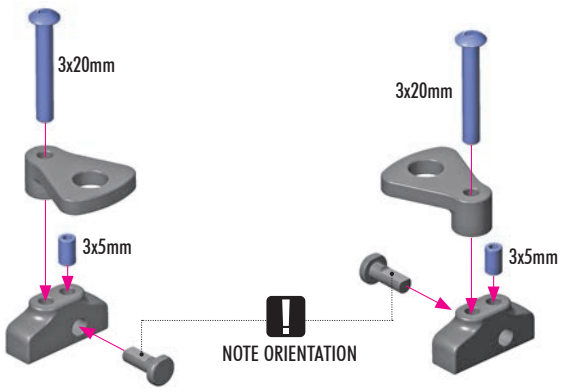

To ensure correct functioning of the battery holder, DO NOT overtighten the screw; the holder must be able to move.

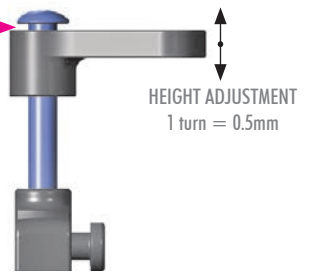

4x 903312 SFH M3x12

VIDEO TECH TIP

WEIGHT BALANCE

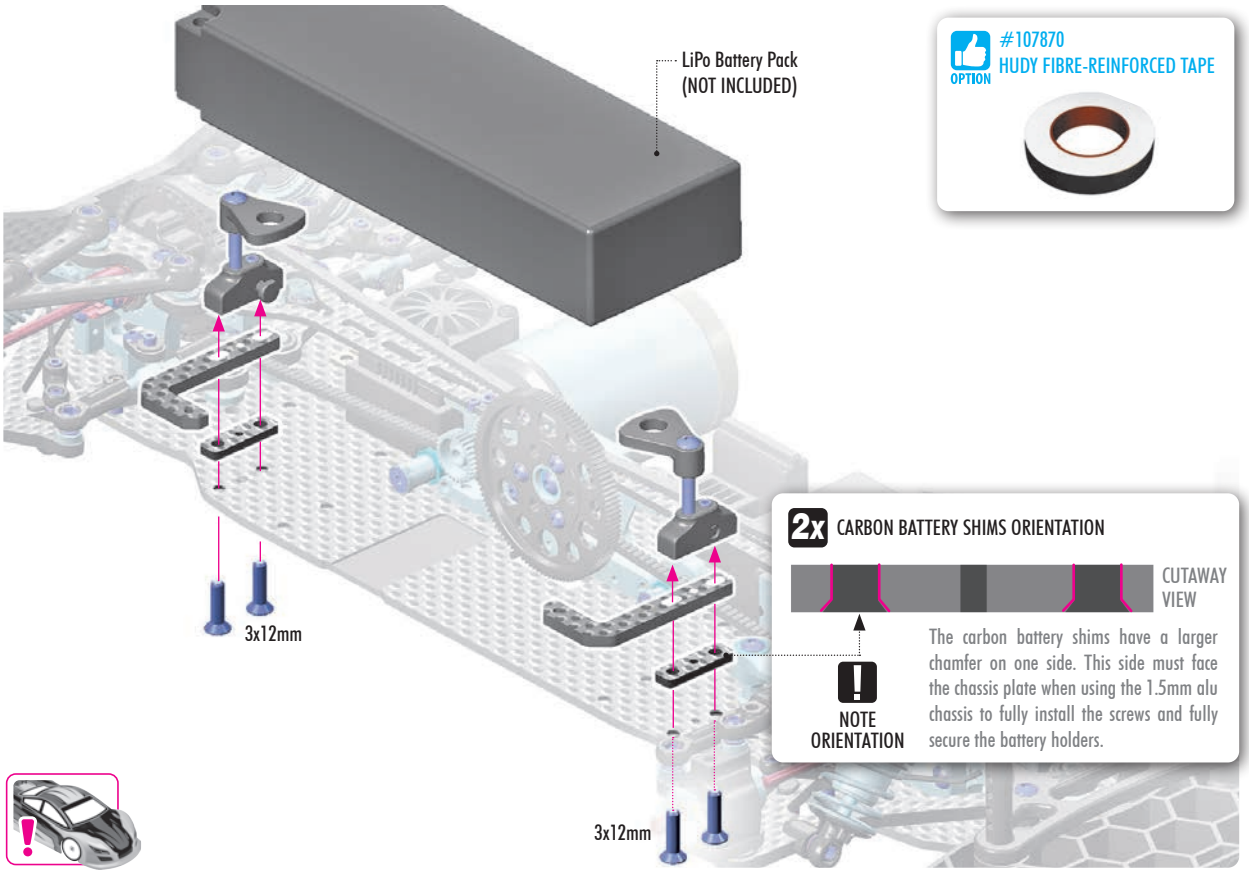

OPTION #107870
HUDY FIBRE-REINFORCED TAPE

2x CARBON BATTERY SHIMS ORIENTATION

CUTAWAY VIEW

NOTE ORIENTATION

The carbon battery shims have a larger chamfer on one side. This side must face the chassis plate when using the 1.5mm alu chassis to fully install the screws and fully secure the battery holders.

4x 903316 SFH M3x16

OPTION

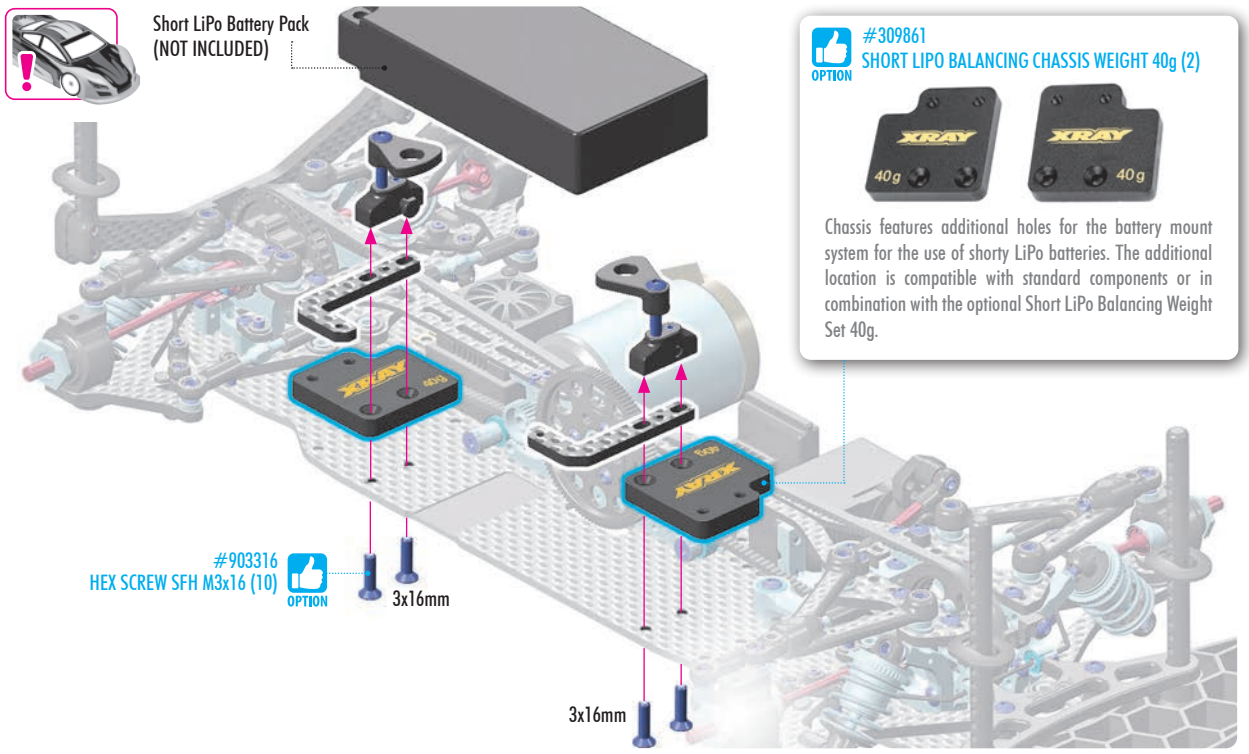

OPTION #309861
SHORT LIPO BALANCING CHASSIS WEIGHT 40g (2)

Chassis features additional holes for the battery mount system for the use of shorty LiPo batteries. The additional location is compatible with standard components or in combination with the optional Short LiPo Balancing Weight Set 40g.





VIDEO TECH TIP

BATTERY MOUNTING SYSTEM

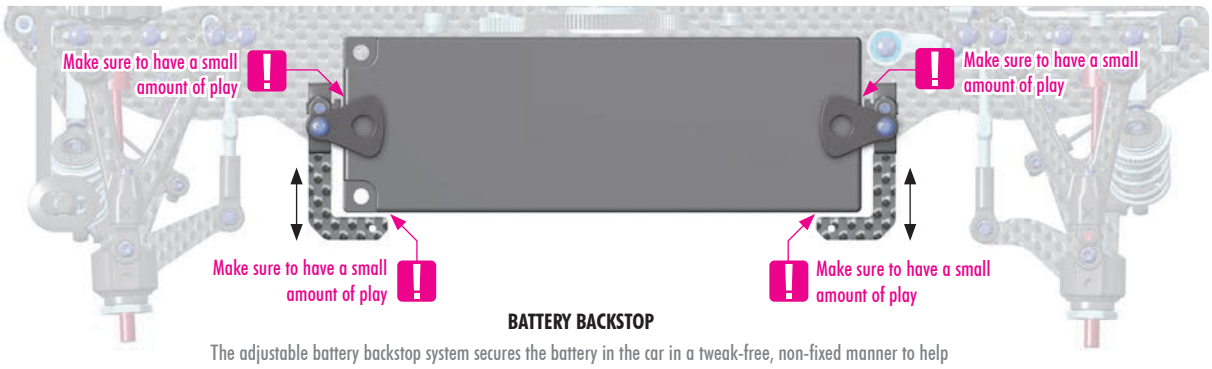

BATTERY BACKSTOP

The adjustable battery backstop system secures the battery in the car in a tweak-free, non-fixed manner to help improve traction and makes it more stable and easier to drive.

It is very important that battery has a very small amount of play in all directions so it does NOT tweak the car, but the play cannot be too much otherwise the battery may fall out in crashes.

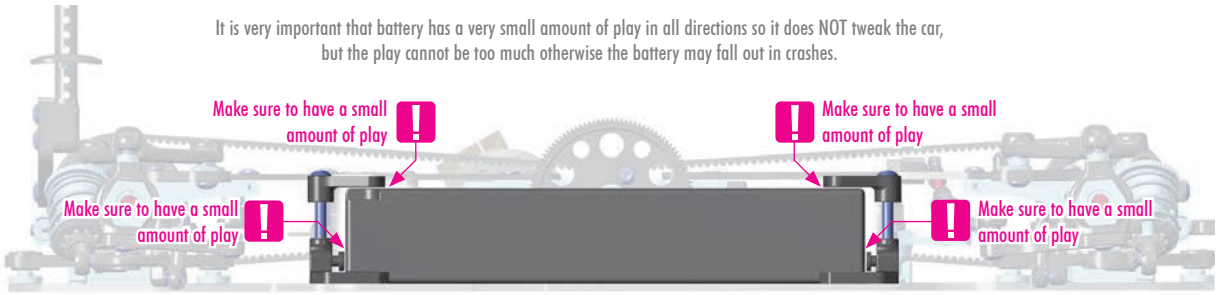

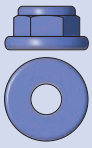

4x 960240 N M4

OPTION WHEELS & TIRES & INSERTS
(HUDY #803053 C3-28)
(HUDY #803061 A1-32)
(HUDY #803062 A1-36)
(HUDY #803063 A1-28)



OPTION

ALU REAR WING SHIM		
#353561	SILVER	OPTION
#293561	SILVER	OPTION
#293561-O	ORANGE	OPTION

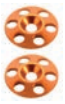

OPTION

OFFSET ALU WHEEL SHIMS		
#305380	0.75mm	OPTION
#305382	0.5mm	OPTION
#305381	1.0mm	OPTION



OPTION

ALU NUT M4 - SERRATED FLANGE		
#296541-B	BLUE	OPTION
#296541-K	BLACK	OPTION
#296541-O	ORANGE	OPTION
#296541-V	VIOLET	OPTION



OPTION Use the optional #305382 0.5mm SHIMS for VTA tires to achieve the correct geometry for VTA class.

Make sure the wheel nuts are very tight, so the wheels DO NOT loosen during run.



VIDEO TECH TIP

TRACK WIDTH (OFFSET)

DOWNSTOP & RIDE HEIGHT

CHASSIS TWEAK

OPTION #293081
HUDY PURE TUNGSTEN WEIGHT 5g



OPTION #293082
HUDY PURE TUNGSTEN WEIGHT 10g



OPTION #309862
XRAY STAINLESS STEEL WEIGHT FOR NARROW BATTERY PACK 35g



OPTION #326181
STAINLESS STEEL BATTERY WEIGHT 35g



OPTION #293083
HUDY PURE TUNGSTEN WEIGHT 15g



OPTION #293085
HUDY PURE TUNGSTEN WEIGHT THIN ROUND WITH M3 - 10g





BODY STOP SYSTEM

The X4 features an adjustable front body upstop system incorporated into the upper arm to prevent the body shell from bottoming out and hitting the ground during cornering. When the system is set correctly, it allows the body to be run lower without dragging on the ground to improve aerodynamic efficiency.



VIDEO TECH TIP

BODY UPSTOPS

OPTION

BODY STOP ALTERNATIVE
with screw
(#902316 SH M3x16mm)

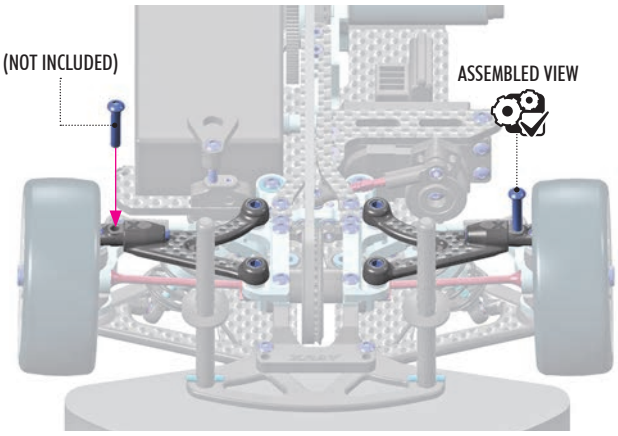

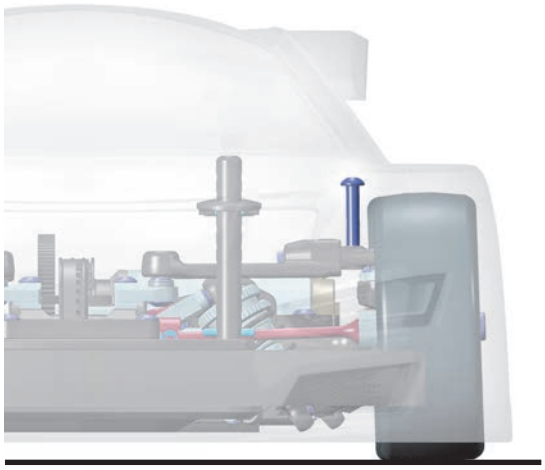



VIDEO TECH TIP

HORIZONTAL
BODY MOUNTING

OPTION

REAR HORIZONTAL BODY MOUNTING

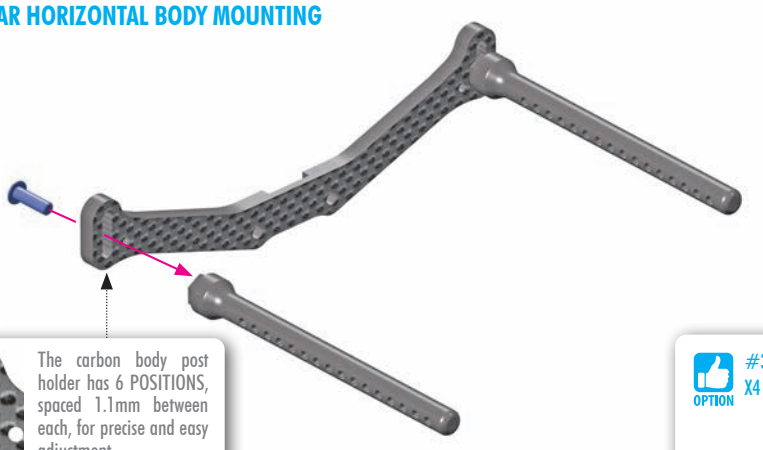



The carbon body post holder has 6 POSITIONS, spaced 1.1mm between each, for precise and easy adjustment.

OPTION

FRONT BODY MOUNT SET		
#301322	0mm	OPTION
#301323	+1mm	OPTION
#301324	+2mm	OPTION

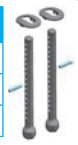

OPTION

#301322-H
HARD COMPOSITE HORIZONTAL REAR BODY MOUNT POST - SET

Optional HARD posts eliminate the flex of the horizontal mounting. Use these posts only for horizontal body mounting.

Optional horizontal rear body mounting has shown benefits on medium to high grip conditions, especially on technical tracks, by improving directional changes, steering response and rotation. Note that rear grip is also reduced, so may be useful in Stock or Super Stock spec class racing.



OPTION

#301349
X4 HORIZONTAL BODY POST MOUNTING GAUGE



Horizontal Body Post Mounting Gauge is special tool designed for X4 that helps to mark the horizontal rear body mounts position on the body shell for a perfect fit on the car and featuring two special scales to check and adjust the proper position of the body. The first scale is used to adjust the rear part of the body and the second scale is used to check the body height around the car. Fits all popular body shells.



MISTAKES USERS
MAKE



COMMON MISTAKES THAT X4 USERS MAKE

Make sure to watch the video of Alexander Hagberg explaining about common mistakes that even experienced drivers make and how to avoid them.

UPPER ARM LINKS ADJUSTMENT

2x 902304 SH M3x4

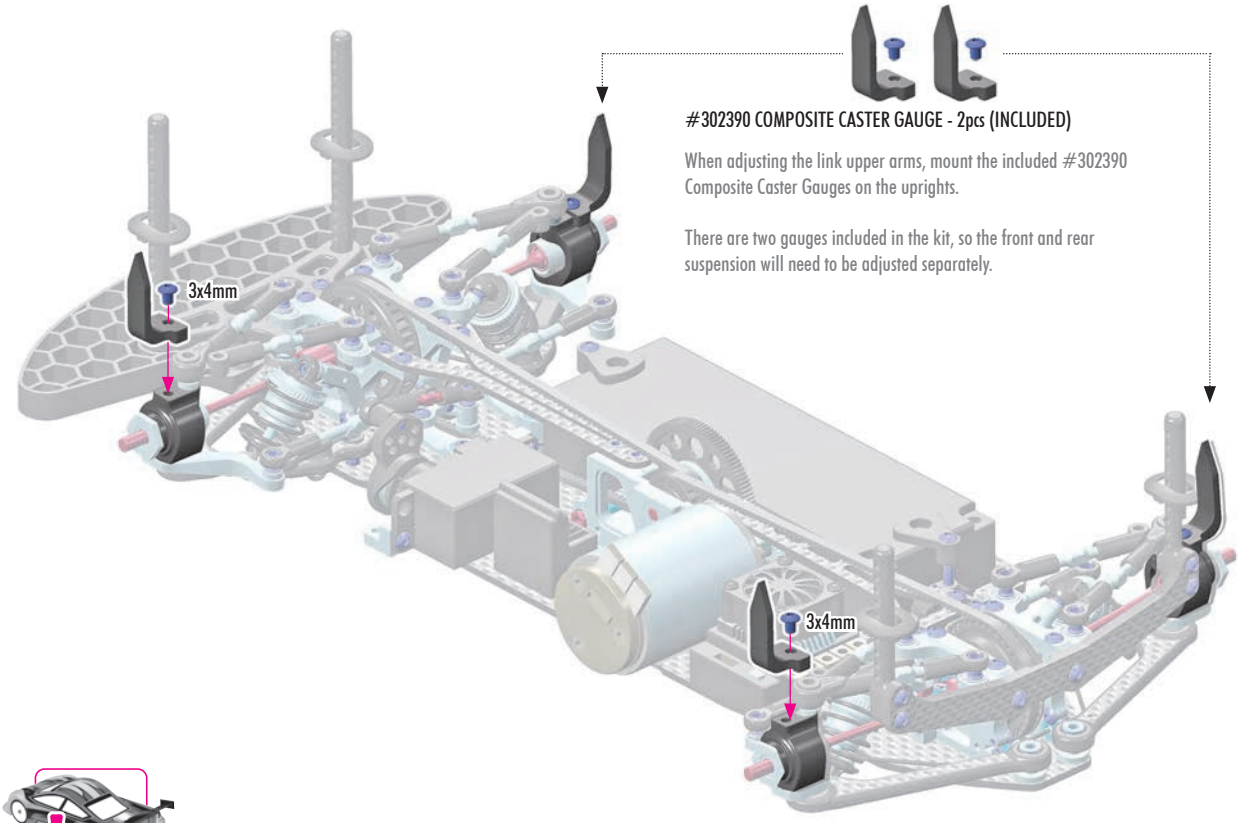

#302390 COMPOSITE CASTER GAUGE - 2pcs (INCLUDED)

When adjusting the link upper arms, mount the included #302390 Composite Caster Gauges on the uprights.

There are two gauges included in the kit, so the front and rear suspension will need to be adjusted separately.



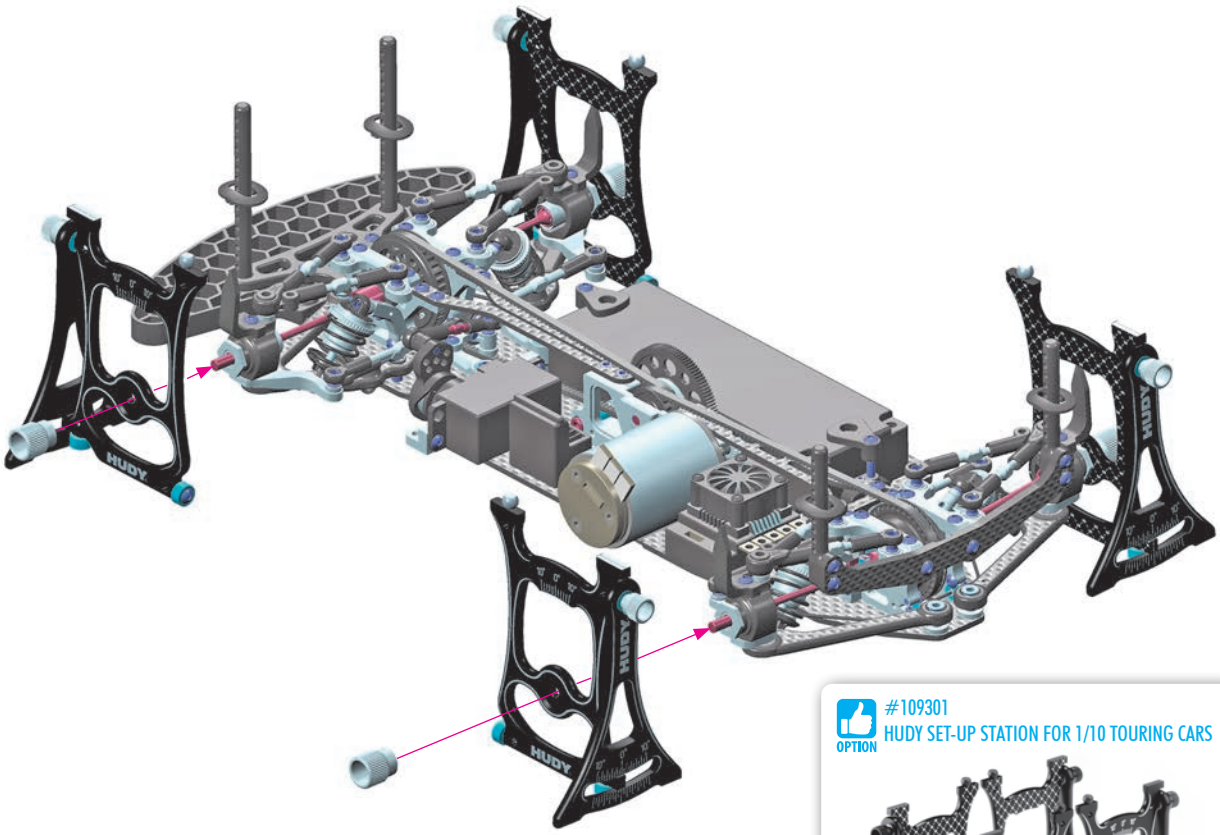

OPTION #109301
HUDY SET-UP STATION FOR 1/10 TOURING CARS







VIDEO TECH TIP

UPPER LINKS ADJUSTMENT

Setting the upper link system caster and camber requires extra attention. It is recommended to start with the kit upper arm lengths and then fine tune from that position.

To adjust caster while retaining the same camber setting, both camber and caster links will be adjusted by equal but opposite amounts. For example, to increase front suspension caster, the caster link is shortened and the camber link is lengthened by the same value.

Utilize the XRAY Composite Caster Gauges (#302390) to fine tune and verify any caster adjustments.

Make sure that all ball cups are straight and aligned over the ball studs after making adjustments to ensure free movement of the upper link arms, and prevent binding during suspension movement.

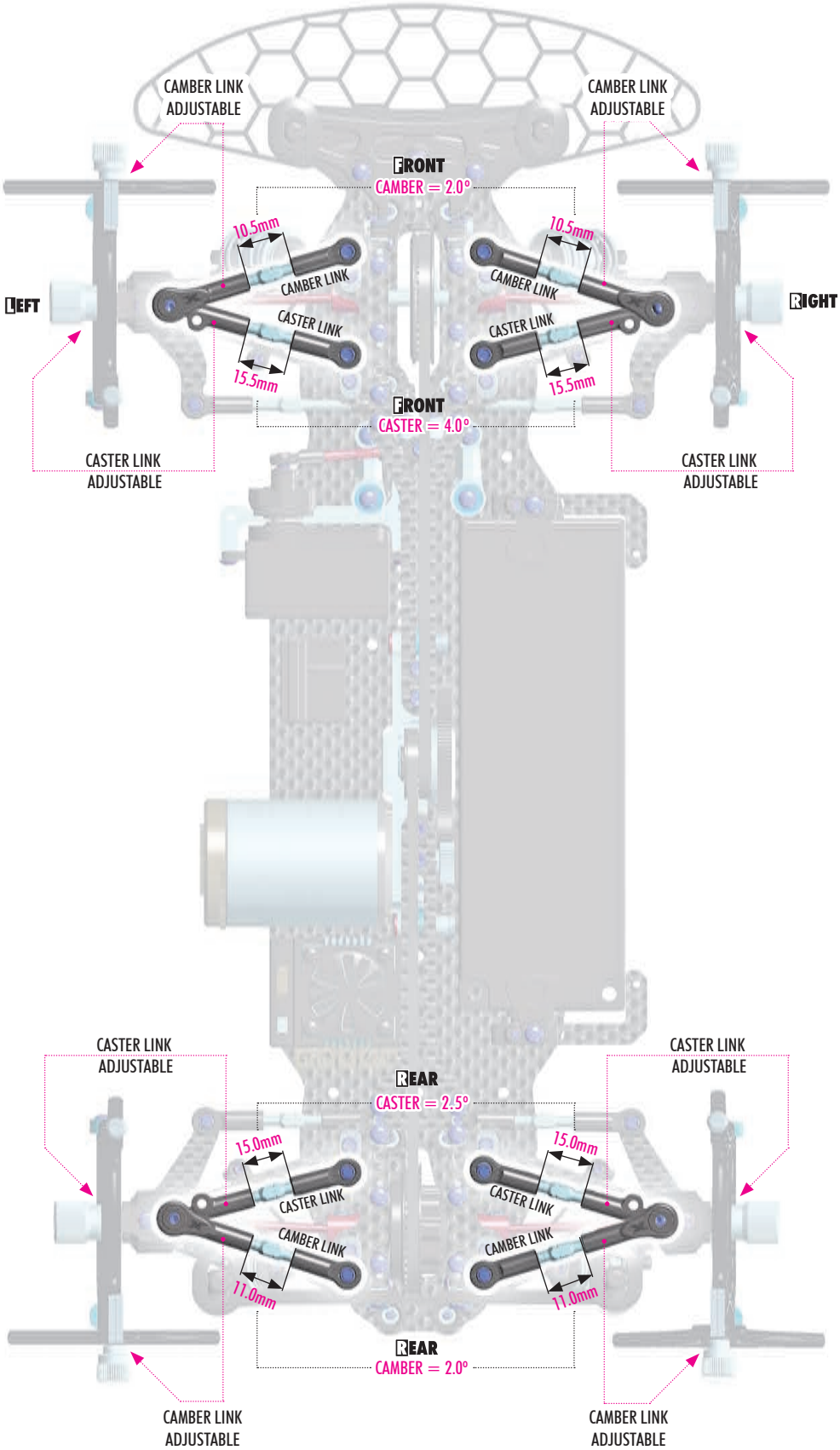

UPPER ARM LINKS ADJUSTMENT

CASTER ADJUSTMENT
When changing caster, it is necessary to check both caster and camber values each time the upper links are adjusted.

CAMBER ADJUSTMENT
Adjustment of caster will directly affect camber and vice-versa. After any adjustment, always check the other values to ensure proper geometry.

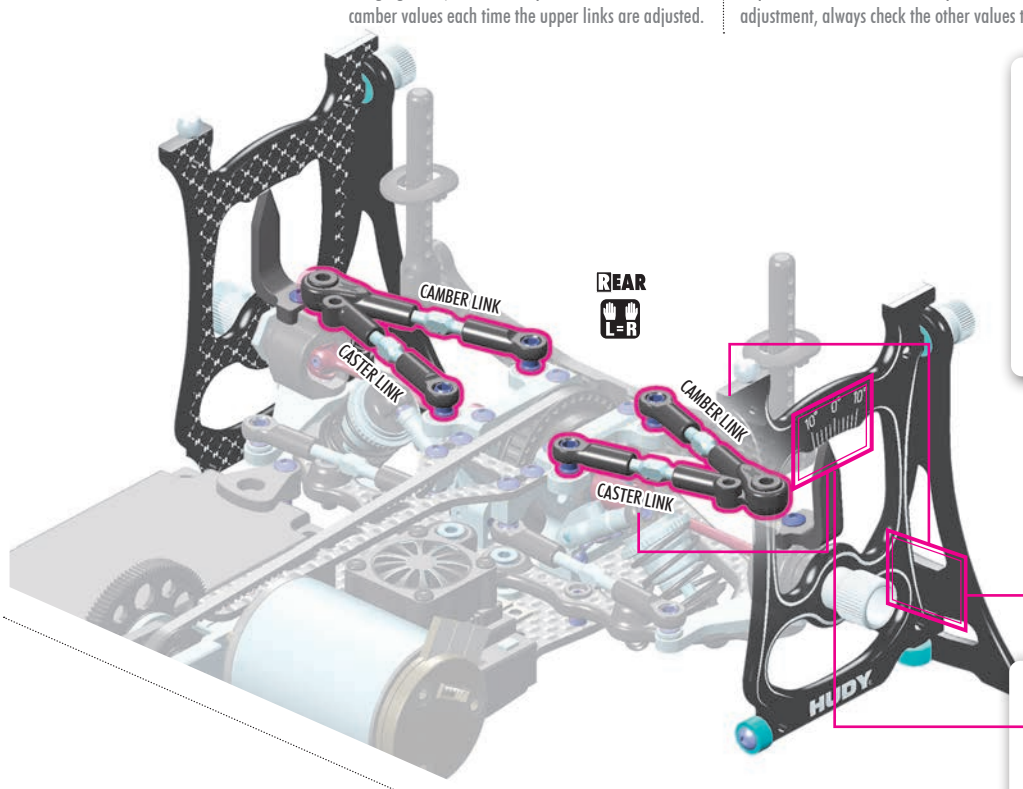

1 LINE ON SET-UP SYSTEM = 1° CAMBER

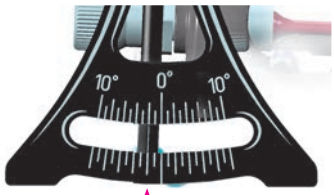

CAMBER 2°
INITIAL SETTING
REAR

INITIAL SETTING
CASTER 2°
REAR

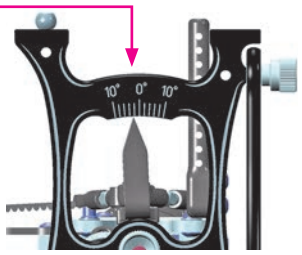

1 LINE ON SET-UP SYSTEM = 2° CASTER

IMPORTANT
Adjustment of caster will directly affect camber and vice-versa. After any adjustment, always check the other values.

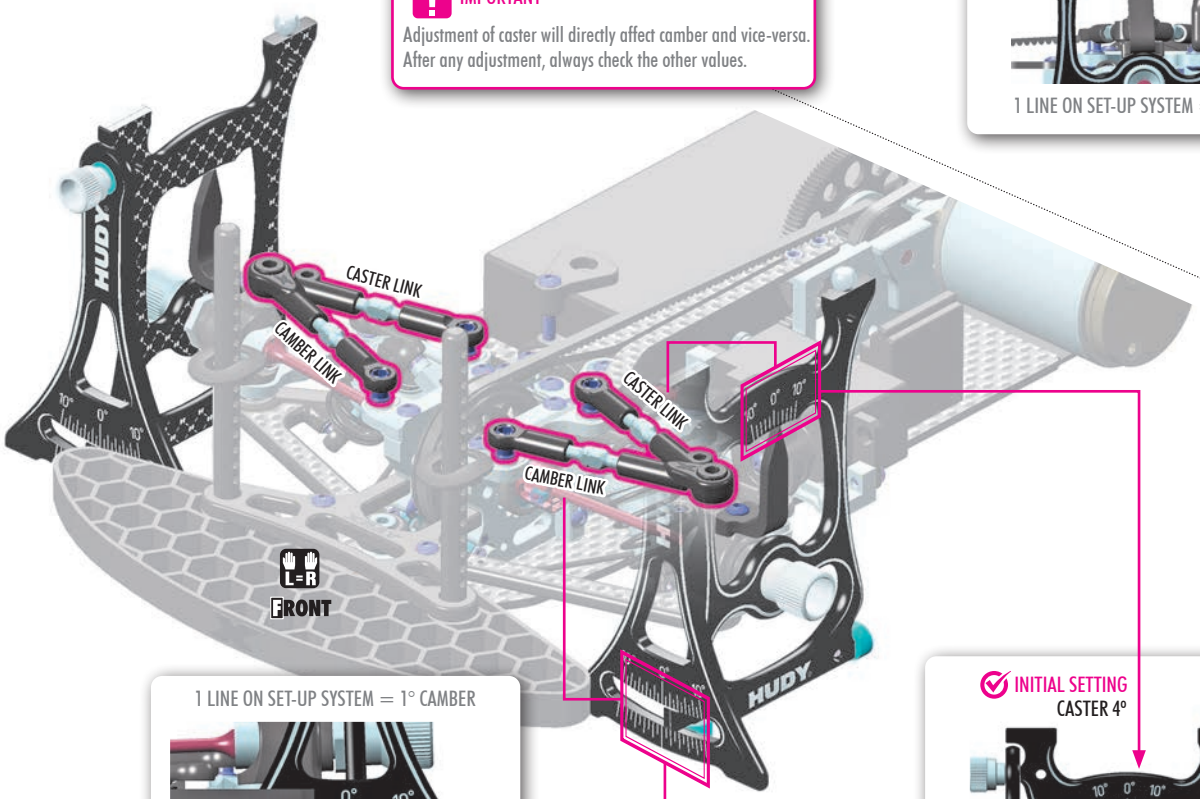

1 LINE ON SET-UP SYSTEM = 1° CAMBER

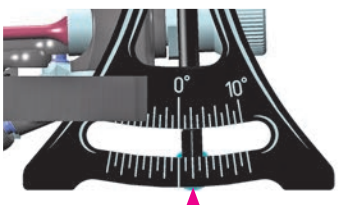

CAMBER 2°
INITIAL SETTING
FRONT

INITIAL SETTING
CASTER 4°
FRONT

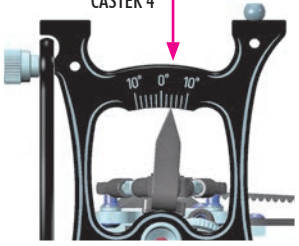

1 LINE ON SET-UP SYSTEM = 2° CASTER

For the most precise and comfortable upstop adjustment, we recommend using the

OPTION #107730
HUDY Droop & Upstop Set-Up Tool.



IMPORTANT:
Other upstop tools on the market may use different wheel diameters, which can result in varying measurements. To ensure accuracy and consistency, we recommend the #107730 - the same tool trusted & used by all XRAY team drivers.

When setting the upstop, make sure to remove the shocks.



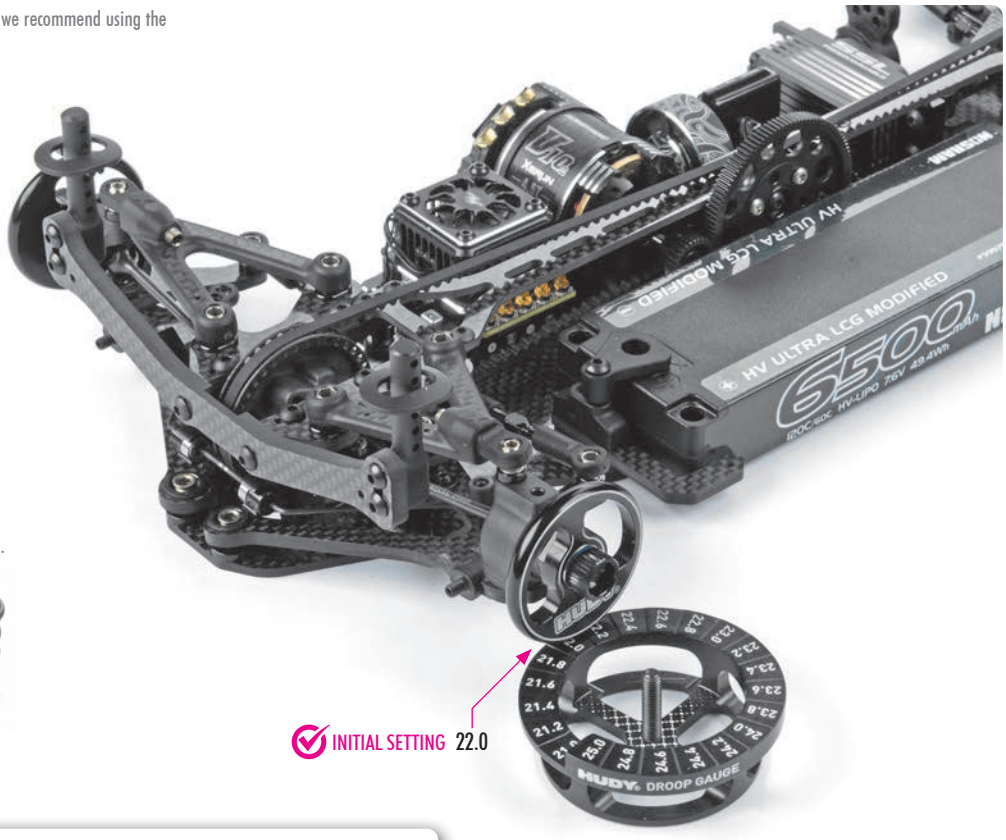



VIDEO TECH TIP

UPSTOPS

UPTRAVEL SETTING — **FRONT & REAR**

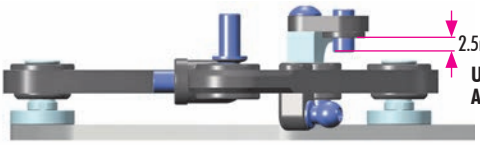

Upstop in use - uptravel is limited in front, rear (or both) to reduce grip on that end of the car, which can make the car easier to drive, with improved cornering speed, and reduced traction rolling as a result.



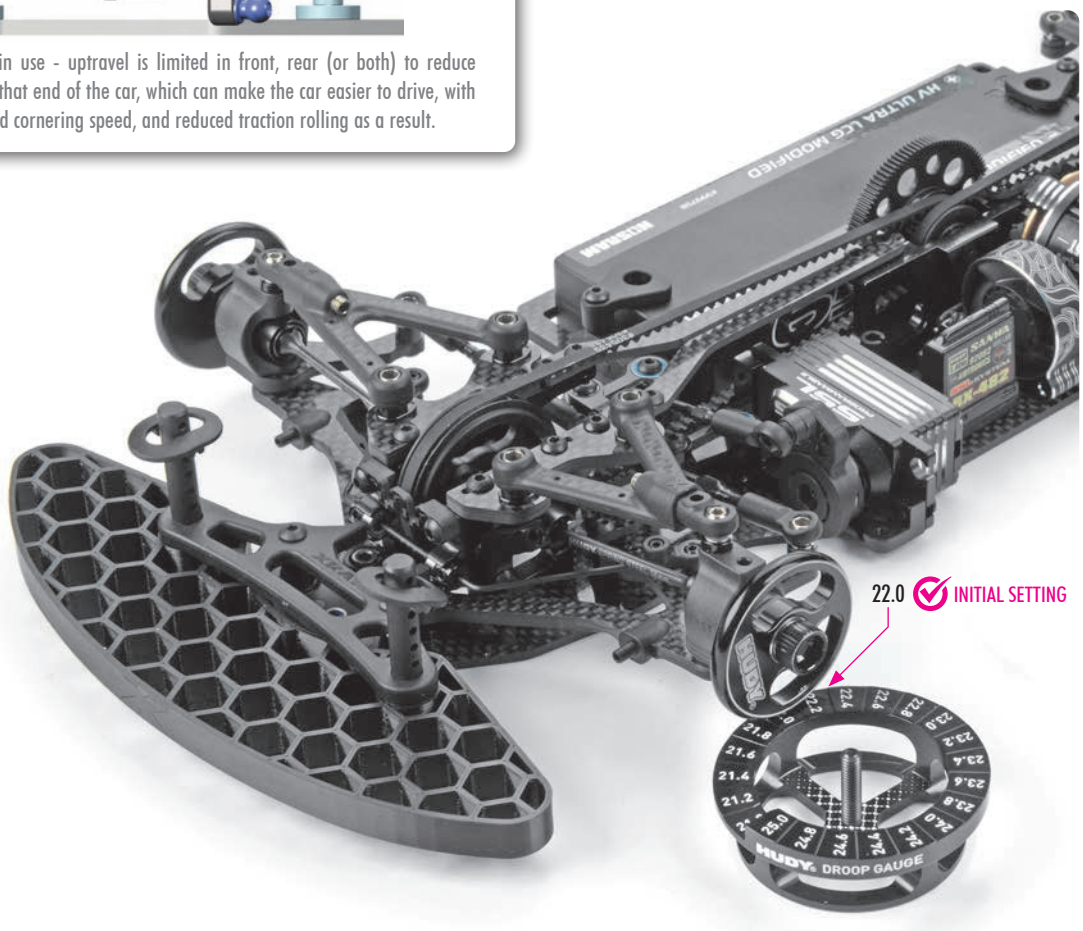



NOTE

EXCLUSIVE PROFESSIONAL

HUDY

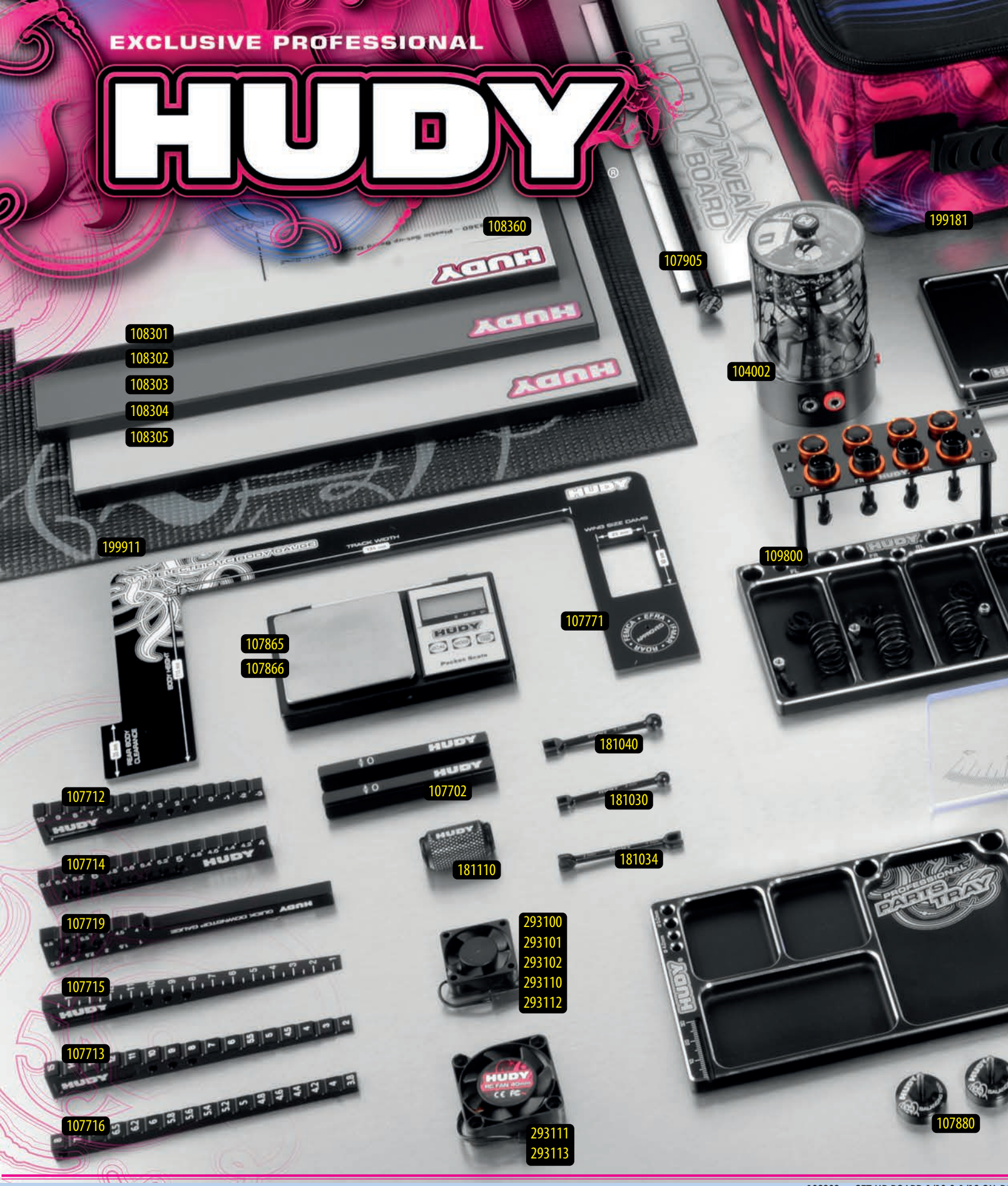

104002	HUDY AIR VAC - VACUUM PUMP - ON-ROAD	107750	HUDY CARBON QUICK CAMBER GAUGE 1.5°, 2°, 2.5° FOR 1/10 TC	108303	SET-UP BOARD 1/10 & 1/12 ON-R
106260	HUDY TIRE ADDITIVE - TIRE GRIPPER - 50ML - V2	107771	HUDY BODY GAUGE 1/10 ELECTRIC TOURING CARS	108304	SET-UP BOARD 1/10 & 1/12 ON-R
107090	HUDY BEARING CHECKING TOOL	107855	HUDY PIT LED	108305	SET-UP BOARD 1/10 & 1/12 ON-R
107601	LIMITED EDITION - REAMER FOR BODY 0-9MM + COVER - SMALL	107865	HUDY PROFESSIONAL DIGITAL POCKET SCALE 300G/0.01G	108360	PLASTIC SET-UP BOARD DECAL 28
107643	LIMITED EDITION - ARM REAMER # 3.0MM	107870	HUDY FIBRE-REINFORCED TAPE - BLACK	109301	HUDY SET-UP STATION FOR 1/10 T
107702	CHASSIS DROOP GAUGE SUPPORT BLOCKS FOR 1/10 (2)	107875	HUDY ULTRA DOUBLE-SIDED TAPE	109351	SET-UP STATION & SET-UP TOOLS
107712	CHASSIS DROOP GAUGE -3.0-10MM FOR 1/10 CARS (10MM)	107880	CHASSIS BALANCING TOOL (2)	109360	ALU NUT FOR 1/10 TOURING SET-
107713	CHASSIS RIDE HEIGHT GAUGE STEPPED 2.0-15.0MM	107904	HUDY QUICK-TWEAK STATION 1/10 & 1/12 ON-ROAD	109370	ALU SET-UP WHEEL FOR 1/10 RUB
107714	ULTRA-FINE CHASSIS DROOP GAUGE 4.0-6.6MM	107905	HUDY TWEAK BOARD SET	109800	HUDY ALU TRAY FOR ON-ROAD D
107715	CHASSIS RIDE HEIGHT GAUGE 1.0-15.0MM (BEVELED)	108150	HUDY 1/10 TOURING CAR STAND - V3	109840	HUDY ALU TRAY FOR 1/10 OFF-RO
107716	ULTRA-FINE CHASSIS RIDE HEIGHT GAUGE 3.8-8.0MM	108190	HUDY ALU TRAY FOR PARTS	109860	HUDY ALU TRAY FOR SET-UP SYST
107719	QUICK DOWNSTOP GAUGE TOOL 1.0-6.5MM	108301	SET-UP BOARD 1/10 & 1/12 ON-ROAD-LIGHTWEIGHT-GREY	109880	HUDY ALU TRAY FOR ACCESSORIE
107720	CHASSIS RIDE HEIGHT GAUGE 30-17MM FOR 1/8 & 1/10 OFF-ROAD	108302	SET-UP BOARD 1/10 & 1/12 ON-ROAD-LIGHTWEIGHT-SILVER GREY	111545	LIMITED EDITION - ALLEN WRENC



OAD - LIGHTWEIGHT-DARK GREY
OAD - LIGHTWEIGHT-TITAN
OAD - LIGHTWEIGHT-BLACK
2X386MM - 1/10 TC
TOURING CARS
+ CARRYING BAG 1/10 TC
UP SYSTEM (4)
BBER TIRES (4)
IFF & SHOCKS
OAD DIFF ASSEMBLY
TEM
S & PIT LED
H # 1.5MM

112045 LIMITED EDITION - ALLEN WRENCH # 2.0MM
113045 LIMITED EDITION - ALLEN WRENCH # 3.0MM
132045 LIMITED EDITION - ALLEN WRENCH + BALL REPL. TIP # 2.0MM
175535 LIMITED EDITION - SOCKET DRIVER # 5.5MM
177035 LIMITED EDITION - SOCKET DRIVER # 7.0MM
181030 HUDY SPRING STEEL TURNBUCKLE WRENCH 3 MM
181034 TURNBUCKLE WRENCH 3 & 4MM - HUDY SPRING STEEL™
181040 TURNBUCKLE WRENCH 4MM - HUDY SPRING STEEL™
181110 HUDY BALL JOINT WRENCH
183011 HUDY PROFESSIONAL MULTI TOOL
188981 HUDY POCKET HOBBY KNIFE
188990 HUDY PROFESSIONAL BODY SCISSORS
199060 HUDY ALU TOOL STAND

199181 HUDY CAR BAG - 1/10 ON-ROAD - TOURING - PAN CAR
199270 HUDY LIPO SAFETY BAG
199911 HUDY PIT MAT ROLL 750X1200MM WITH PRINTING
293100 HUDY ALU RC FAN 30MM - BOTTOM MOUNT 2 HOLE
293101 HUDY ALU RC FAN 30MM - SIDE MOUNT 2 HOLE
293102 HUDY ALU RC FAN 30MM - TOP/SIDE MOUNT 4 HOLE
293110 HUDY BRUSHLESS RC FAN 30MM - WITH EXTERNAL SOLDERING TABS
293111 HUDY BRUSHLESS RC FAN 40MM - WITH EXTERNAL SOLDERING TABS
293112 HUDY BRUSHLESS RC FAN 30MM - WITH INTERNAL SOLDERING TABS
293113 HUDY BRUSHLESS RC FAN 40MM - WITH INTERNAL SOLDERING TABS
298100 HUDY TIN ROUND BOX 80x30MM

For more information about tools, set-up equipment & accessories suitable for your car please visit:

www.hudy.net

EXCLUSIVE PROFESSIONAL

HUDY



107761	HUDY ADJUSTABLE CAMBER GAUGE 80MM
107772	HUDY PROFESSIONAL 1/10 TC WHEEL ARCH MARKER + WHEEL ADAPTER & NUT
106210	HUDY GRAPHITE GREASE
106230	HUDY BEARING OIL
106200	HUDY MAGIC CLEANING GUM
106261	HUDY TIRE ADDITIVE - TIRE GRIPPER RED - 50ML
106350	HUDY PREMIUM SILICONE OIL 500 CST - 50ML
107861	HUDY PROFFESIONAL RACING STOPWATCH XL DISPLAY
106290	HUDY PROFFESIONAL SOLDER 3M LENGTH
107840	CLEANING BRUSH LARGE - SOFT
107846	CLEANING BRUSH SMALL - SOFT
105520	WHEEL ADAPTER FOR 1/10 ON-ROAD & 1/10 OFF-ROAD - 12MM

105590	HUDY WHEEL BALANCING PUTTY
181090	HUDY SPECIAL TOOL FOR TURNBUCKLES & NUTS
181091	HUDY TURNBUCKLE WRENCH 3 & 4MM - V2
803053	HUDY 1/10 TC CARPET TIRES C3-28 (4)
803062	HUDY 1/10 TC TIRES A1-36 - ASPHALT (4)
293011	HUDY STAINLESS STEEL BATTERY WEIGHT 35G
293012	HUDY STAINLESS STEEL BATTERY WEIGHT FOR NARROW BATTERY PACK 35G
293080	LEAD WEIGHTS 4x5G & 4x10G WITH 3M GLUE
293081	HUDY PURE TUNGSTEN WEIGHT 5G
293082	HUDY PURE TUNGSTEN WEIGHT 10G
293083	HUDY PURE TUNGSTEN WEIGHT 15G
293084	PRECISION BALANCING CHASSIS WEIGHT 10G (4)



293311	CARBON REAR WING SIDE PLATE 0.5MM - 1/10 ELECTRIC (2)
293403	ALU CLAMP SERVO HORN - FUTABA, SAVÖX - OFFSET 1-HOLE M3 - 25T
293493	ALU SERVO HORN - FUTABA, SAVÖX - OFFSET 1-HOLE M3 - 25T - V2
294017-35	HUDY ALU ULTRA-LIGHT PINION GEAR - HARD COATED - 23T / 48
294126-64	HUDY ALU ULTRA-LIGHT PINION GEAR - HARD COATED - 40T / 64
298012	HUDY PARTS BOX - 10-COMPARTMENTS
298013	HUDY SPRINGS BOX - 10-COMPARTMENTS
298014	HUDY PARTS BOX - 8-COMPARTMENTS
298015	HUDY PARTS CASE - 290 x 195MM
298016	HUDY TINY HARDWARE BOX - 4-COMPARTMENTS
298017	HUDY TINY ONE-PIECE HARDWARE BOX - 8-COMPARTMENTS
298018	HUDY TINY HARDWARE BOX - 8-COMPARTMENTS
298019	HUDY DIFF BOX - 8-COMPARTMENTS
199280M-H	HUDY HARD CASE - 140x110x95MM - OIL BAG MEDIUM
199290-H	HUDY HARD CASE - 235x190x75MM - ACCESSORIES / ENGINE BAG
199295-H	HUDY HARD CASE - 280x150x85MM - ACCESSORIES BAG LARGE
199296-H	HUDY HARD CASE - 120x85x46MM - ACCESSORIES / STOP WATCH

For more information about tools, set-up equipment & accessories suitable for your car please visit:

www.hudy.net



www.teamxray.com

XRAY EUROPE

XRAY, K VÝSTAVISKU 6992, 91101 TRENCIN, SLOVAKIA, EUROPE
PHONE: +421-32-740 11 00, FAX: +421-32-740 11 09, info@teamxray.com

XRAY USA

RC AMERICA, 2030 Century Center Blvd #15, Irving, TX 75062, USA
PHONE: 214-744-2400, FAX: 214-744-2401, xray@rcamerica.com

MADE IN EUROPE SLOVAKIA

/TeamXray /TeamXray /TeamXray /TeamXrayRC /XrayRacing /XrayRacing